LEINE LINDE

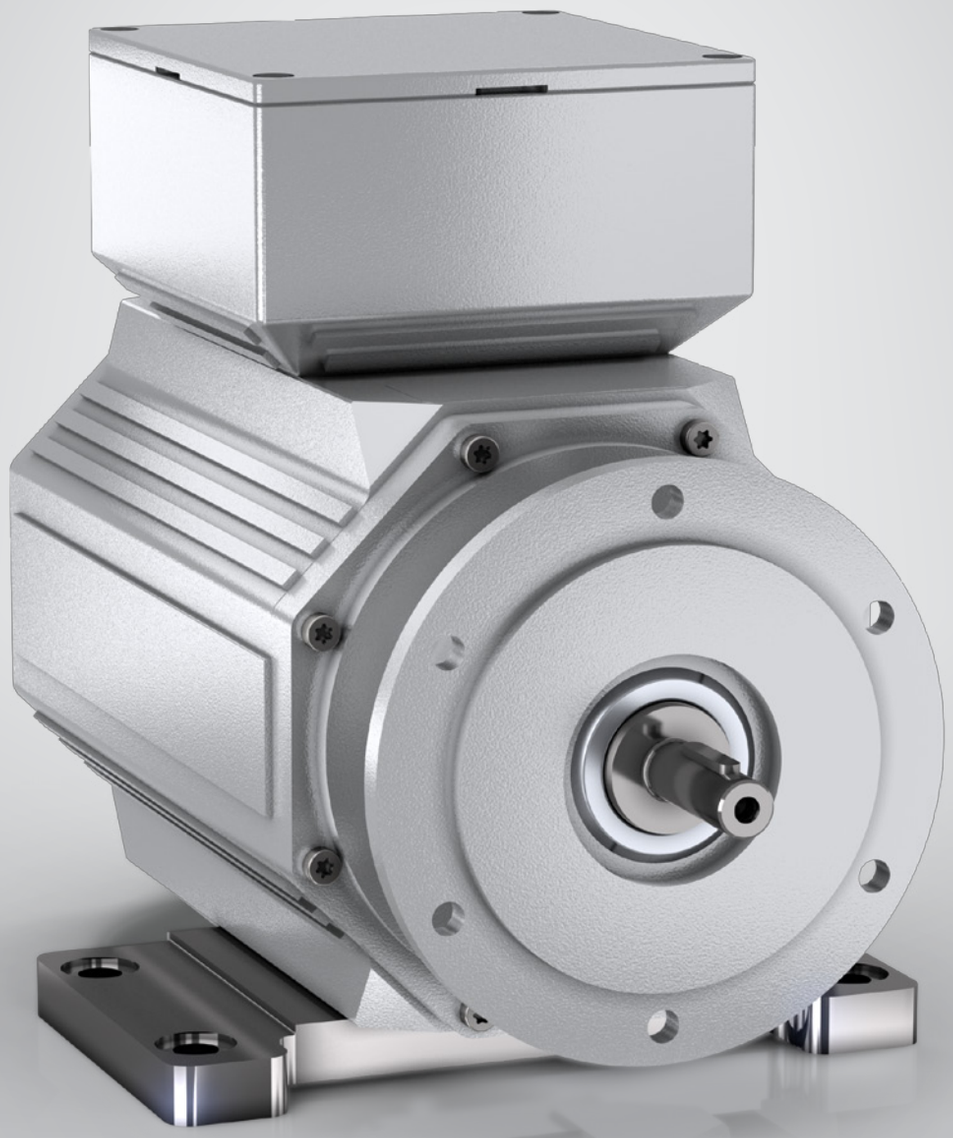

EXTREME 1000 SERIES

MULTIFUNCTIONAL ENCODERS

AMI
Automation and Metrology International, LLC
8808 Tyler Blvd, Mentor, OH 44060
1-888-354-2525 | sales@auto-met.com
Request a quote: auto-met.com

1000 series

Multifunctional encoders with extreme durability

Equipped for extreme environments

In many applications within metal, mining and marine industries the demands on the equipment is exceptional. The machines are subject to exposure from mechanical loads, vibrations and shock in an environment of dust, liquids and high temperatures. They handle advanced machinery with utmost safety demands and economical value – failure may never be an option. Such conditions require components of extraordinary durability, ready to meet extreme challenges in the field.

Robustness first

The encoders in the 1000 series are designed based on one key requirement – offer the most robust mechanical solution possible. The space for ball bearings has been optimized, enabling a dual set of bearings with dimensions that are nothing less than extreme when it comes to encoders. The high encapsulation level, IP67, protects the inner parts from dust and liquids, and as special option the housing can even be provided in stainless steel.

Modular, redundant and multifunctional

The 1000 series is based on a modular concept with many options that can be combined into one multifunctional unit. One encoder unit may include dual incremental outputs for redundant speed feedback together with an absolute position output with optional fieldbus technology. This gives a redundant and multifunctional encoder adapted for each specific application.

Modular concept of the 1000 series

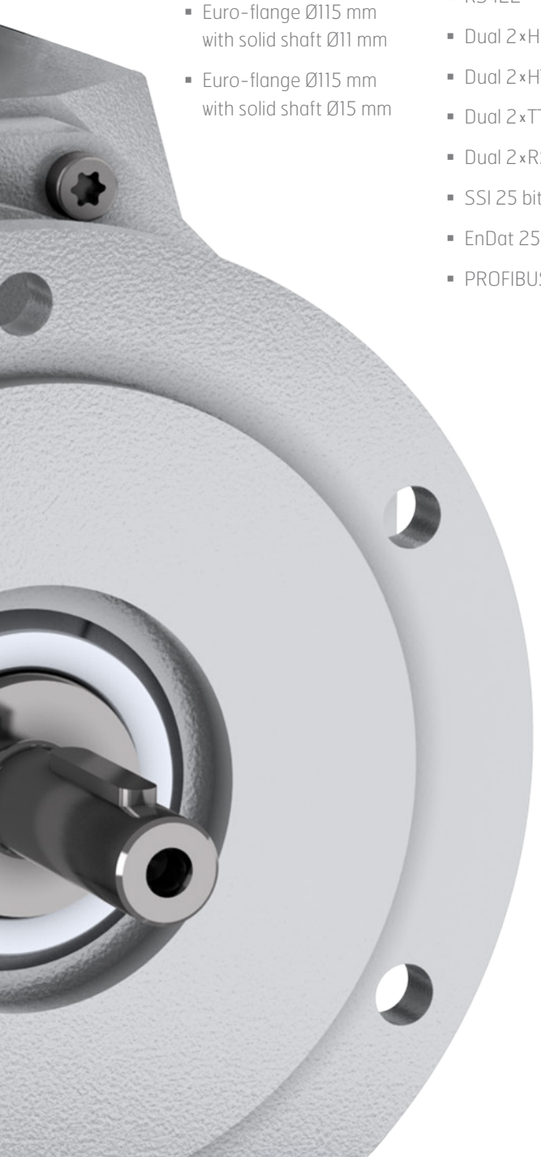

1. Mechanics

- Pre-mounted stub shaft Ø160 mm
- Pre-mounted stub shaft Ø220 mm
- Euro-flange Ø115 mm with solid shaft Ø11 mm
- Euro-flange Ø115 mm with solid shaft Ø15 mm

2. Output box A

- HCHTL
- HTL
- TTL
- RS422
- Dual 2×HCHTL
- Dual 2×HTL
- Dual 2×TTL
- Dual 2×RS422
- SSI 25 bit
- EnDat 25 bit
- PROFIBUS 25 bit

3. Output box B (optional)

- HCHTL
- HTL
- TTL
- RS422
- Dual 2×HCHTL
- Dual 2×HTL
- Dual 2×TTL
- Dual 2×RS422
- SSI 25 bit
- EnDat 25 bit
- PROFIBUS 25 bit
- Parallel 13 bit
- CRG Overspeed
- Base plate for foot-mounting

4. Resolution (incremental)

- 1024, 2048, 2500, 3072, 4096, 5000, 8192, 10000 ppr. Other pulse rates available upon request

5. Cover

- Side mounted box (cable gland pointing downwards) Anodized aluminium cover.
- Top mounted box (cable gland pointing backwards) Anodized aluminium cover.
- Special stainless steel cover (cable gland pointing radially)

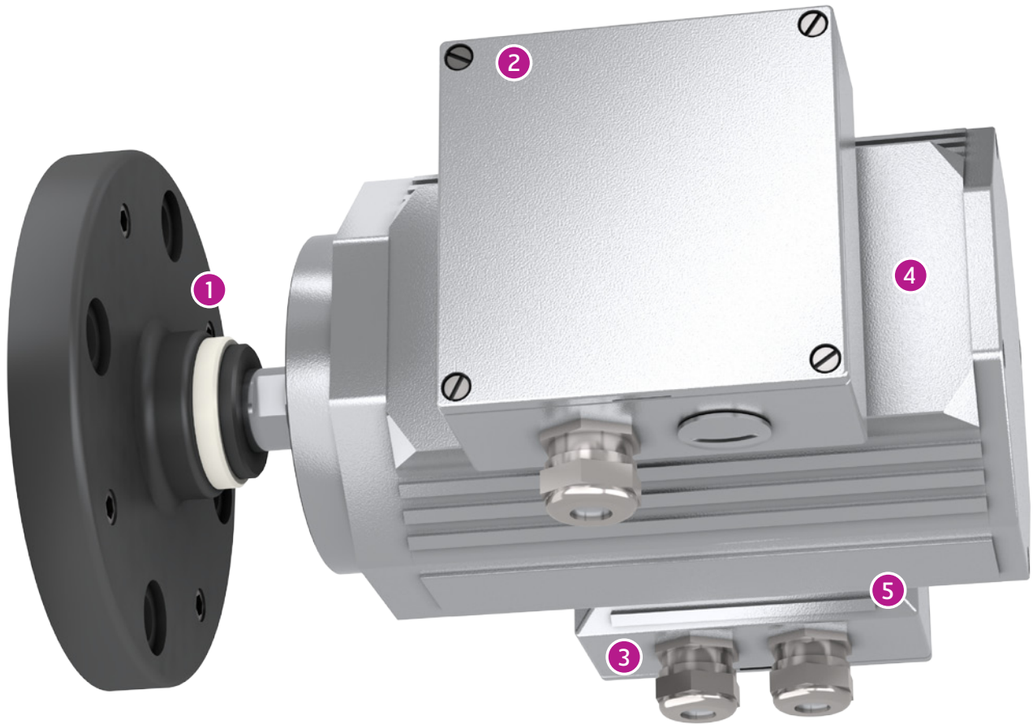

Combine your own encoder by selecting your preferred option for each module!

Ordering example:	1. Mechanics:	Stub shaft Ø160 mm
	2. Output box A:	HTL
	3. Output box B:	PROFIBUS 25 bit
	4. Resolution:	8192 ppr
	5. Cover:	Side mounted box

Mechanics

– solutions for mechanical mounting

This is a general overview of available mechanical options.

Combine your own mechanical solution by selecting your preferred option for each module!

Euro-flange Ø115 mm

Ø11 or Ø15 mm solid shaft with key nut, PROFIBUS output, top-mounted box.
Base plate for foot-mounting.

Industry standard flange B10. Optional mounting with accessory base plate (replaces box B). Three cable glands for fieldbus connection.

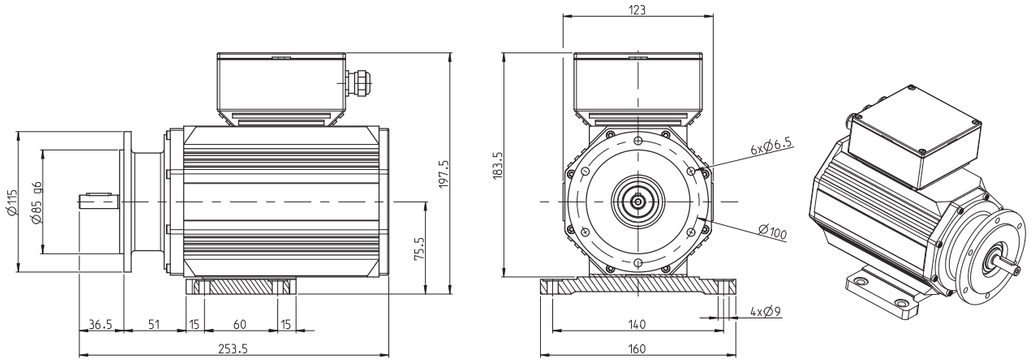

Synchro flange Ø100 mm

Ø12 mm solid shaft with key nut, one encoder output, radial outlet. Special mechanics with stainless steel cover.

Stainless steel version only available with single encoder output and SSI, EnDat or incremental interface.

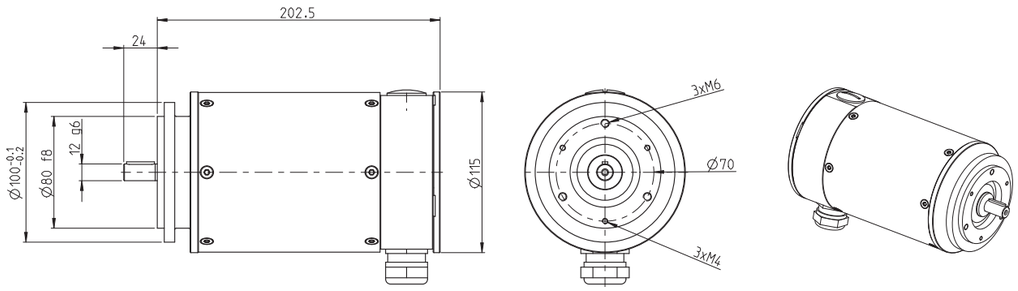

Stub shaft Ø160 mm

Three encoder outputs, two side-mounted boxes.

Pre-mounted stub shaft with insulation. Delivered with sturdy torque bracket, insulated torque arm and accessory screws for fixing of the shaft.

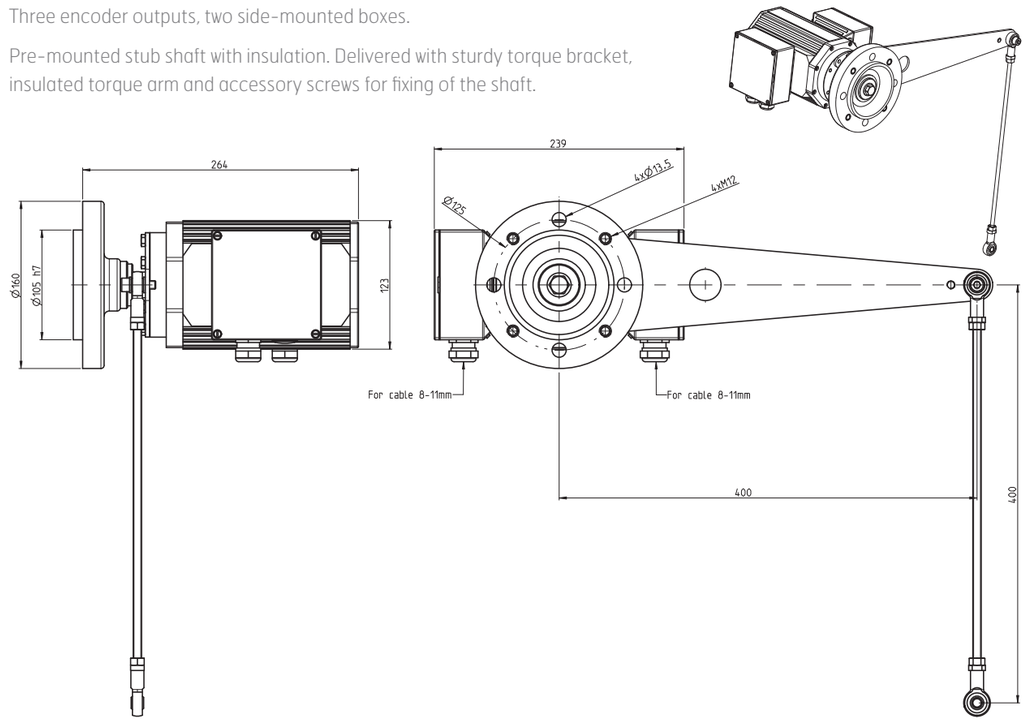

Stub shaft Ø220 mm

Encoder and CRG Overspeed output, two side-mounted boxes.

Pre-mounted stub shaft with insulation. Delivered with sturdy torque bracket, insulated torque arm and accessory screws for fixing of the shaft.

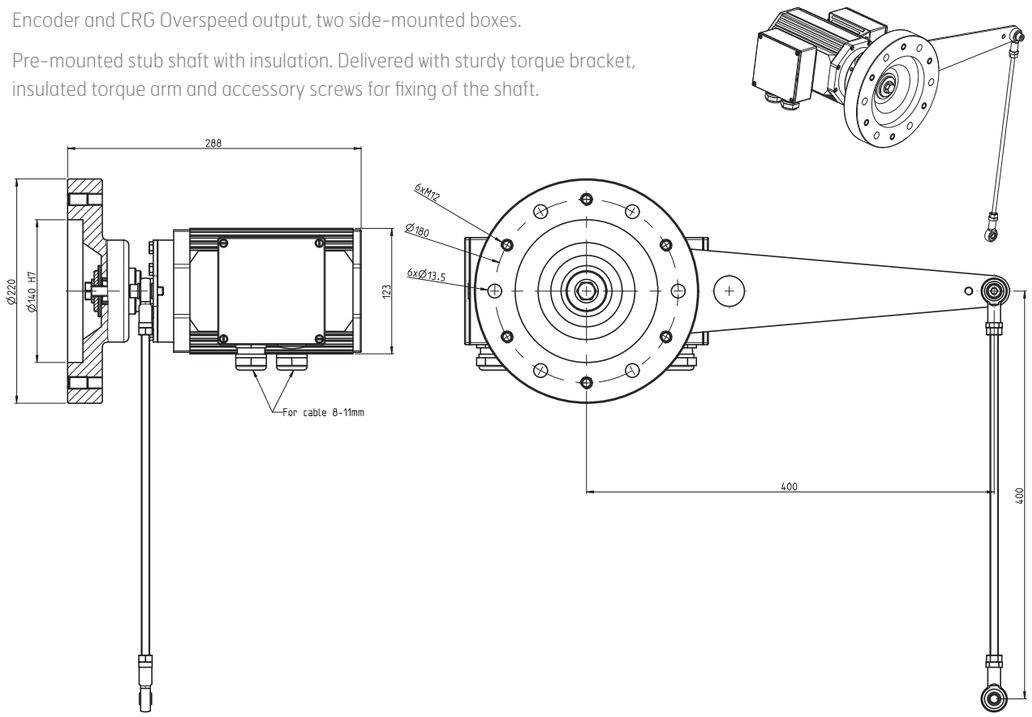

Outputs

– electrical output interfaces

Encoder output signals are available in a variety of different interfaces. Consult page 4-5 for possible combinations and put together your own encoder with up to four separate outputs.

Incremental interfaces

There are several variations of incremental interfaces with different supply voltages and signal levels. When choosing an interface, it is necessary to take into account factors in the application's operating environment. The exact properties of the interface is affected by frequency, cable length and temperature.

Interface	TTL	RS-422	HTL	HC-HTL
Supply	5 Vdc	9-30 Vdc	9-30 Vdc	9-30 Vdc
Output signal	5 Vdc	5 Vdc	9-30 Vdc	9-30 Vdc
Suitable for	Low frequencies over short cables	High frequencies over long cables	High frequencies over medium-length cables	Medium frequencies over long cables
Max frequency	50 kHz	1000 kHz	300 kHz	100 kHz
Max cable length	50 m at 50 kHz	1000 m at 1000 kHz	100 m at 100 kHz	350 m at 100 kHz

Dual incremental outputs

Two separate encoder outputs can be combined into one and the same terminal box, equipped with two cable outlets. This solution provides added safety in the form of redundancy, the outputs are based on two separate scanning LED:s and electronic circuits. The outputs are galvanically insulated from each other and may be connected to two separate systems for different function or for redundancy. The dual option is available for all incremental interfaces.

SSI 25 bit

SSI or Synchronous Serial Interface is a digital point-to-point interface. It provides unidirectional communication at speeds up to 1 MHz by the use of only four wires. The SSI interface is available with 25 bit resolution, corresponding to 8192 unique positions singleturn and 4096 revolutions multiturn.

EnDat 25 bit

The EnDat interface is a digital bidirectional interface. It is capable of transmitting position values from absolute encoders, as well as reading and updating information stored in the encoder. Thanks to the serial transmission method only four signal lines are required. It is available with 25 bit resolution, corresponding to 8192 unique positions singleturn and 4096 revolutions multiturn.

PROFIBUS 25 bit

PROFIBUS is a powerful and versatile open fieldbus, defined by several international standards. Leine & Linde's encoders follow the device profiles for DPV0 and DPV2. A PROFIBUS system is set up with slave-to-slave communication, which means that slaves in a net can exchange information with each other without communication being initiated by the master. This type of communication is very efficient and fast and reduces the response time on the bus by up to 90%. PROFIBUS encoder functionality includes position read out, changed direction of counting, diagnostic data, scaling function, preset value function, as well as velocity read-out. The PROFIBUS interface is available with 25 bit resolution, corresponding to 8192 unique positions singleturn and 4096 revolutions multiturn.

Parallel 13 bit

Parallel output provides an absolute position available simultaneously on the output. The signal is transferred over one separate cable wire per bit, which gives the advantage that all the data is available in real time, all the time. The parallel output is available with up to 13 bit singleturn resolution.

CRG Overspeed

The CRG Overspeed features a pre-programmed frequency value for overspeed indication. If the limit speed is reached a mechanical relay will change state to indicate overspeed to the system. A typical solution is to use a 1000 series encoder with two separate terminal boxes – one for an incremental signal output connected to the motor drive system, and the other for the CRG Overspeed function with relay outputs for alarm. In safety critical applications it is also important to know that the control system itself is reliable. Therefore the CRG Overspeed features advanced logic to monitor that the encoder's basic function is reliable at all moments. Functionality includes redundant overspeed outputs as well as monitoring of signal detection, state transition and encoder diagnostics. This combined overspeed and function monitoring system makes the CRG Overspeed a unique product for safety applications where a reliable speed is required.

Performance

Technical data

Operating temperature	-40..+70 °C or -20..+100 °C *
Ingress protection class [IEC 60529]	IP67
Vibration [IEC 6006826]	300 m/s²
Shock [IEC 60068227]	2000 m/s²
Max shaft loads (axial/radial)	1000N/680N **
Cover material	Anodized aluminum ***
Shaft material	Stainless steel
Rotational speed max	4000 rpm
Weight	approx. 6900 g ****

* Optional: -40..+70 °C standard for interface HCHTL, SSI, parallel, PROFIBUS, CRG Overspeed
-20..+100 °C standard for interface HTL, TTL, RS422, EnDat

** Based on variant with Ø15 mm shaft

*** Stainless steel upon request

**** Based on variant with one box and no stub shaft

Accessories

Mounting accessories	Part number
Base plate for foot-mounting	680846-01
Shaft coupling 11-11 mm with keyway	46441P33P33
Shaft coupling 15-15 mm with keyway	46441P40P40

OptoLink gateways	Part number
CRG OptoLink Transmitter 9-30 Vdc supply, HTL input	01300320
CRG OptoLink Receiver 9-30 Vdc supply, HTL output	01300330
CRG OptoLink Receiver 9-30 Vdc supply, RS-422 output	01300332
CRG OptoLink Receiver 5 Vdc supply, TTL output	731720-01

SWEDEN / HEAD OFFICE

Address Leine & Linde AB
Box 8
SE-645 21 Strängnäs

Visiting address Olivehällsvägen 8

Telephone +46-(0)152-265 00
Fax +46-(0)152-265 05
E-mail info@leinelinde.com
Website www.leinelinde.com

BRAZIL
T +55-19-3367-5657
F +55-19-3367-5658
info@leinelinde.com.br

DENMARK
T +45-862-308 34
F +45-862-306 21
info@leinelinde.dk

GERMANY
T +49-(0)7361-78093-0
F +49-(0)7361-78093-11
info@leinelinde.de

ITALY
T +39-039-596 01 08
F +39-039-971 22 08
info@leinelinde.it

CHINA
T +86-(021)-52 58 35 66
F +86-(021)-52 58 35 99
info@leinelinde.cn

FINLAND
T +358-(0)9-561 72 00
F +358-(0)9-561 72 020
info@leinelinde.fi

INDIA
T +91-11-2617 2504
F +91-11-4058 2516
info@leinelinde.in

SOUTH KOREA
T +82-(0)51-746 5420
F +82-(0)51-746 5421
info@leinelinde.co.kr

Leine & Linde's worldwide presence. Read more at www.leinelinde.com

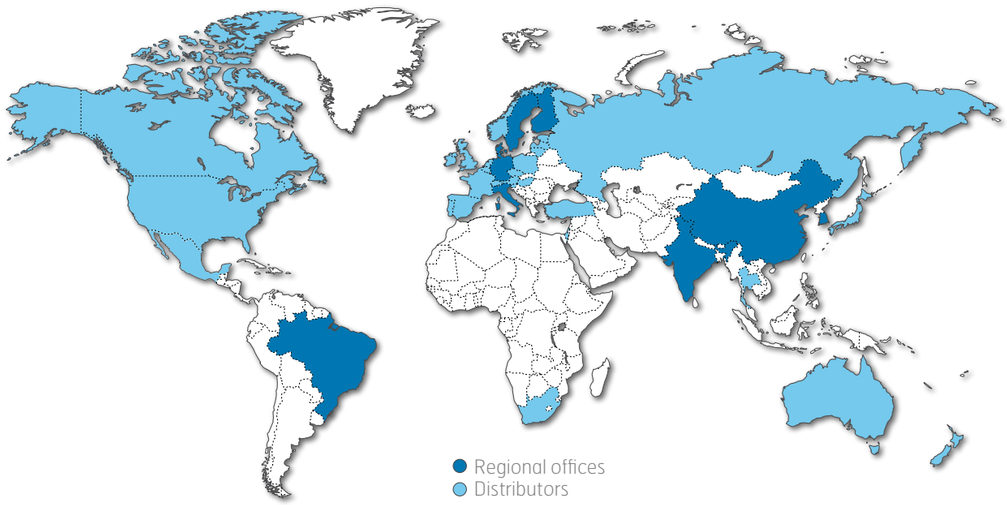

The best encoders are those you never have to think about. Those that simply do their job – year after year. Leine & Linde develops and manufactures customised encoder solutions for demanding environments, advanced measuring systems for accurate feedback of speed and position.

LEINE LINDE

+46-(0)152-265 00 www.leinelinde.com

Part no. 823095-02, ver. 01

Automation and Metrology International, LLC
1-888-354-2525
auto-met.com