ACU-RITE®

Digital Readouts

Linear Encoders

For Manually-Operated Machine Tools

07/2019

Automation and Metrology International, LLC
8808 Tyler Blvd, Mentor, OH 44060

1-888-354-2525 | sales@auto-met.com
Request a quote: auto-met.com

Digital readouts from ACU-RITE make your manually operated machine tools more profitable, improve productivity and raise the quality of the machined workpiece. The 7" TFT color flat panel display shows the actual axis position lucidly and clearly. The context-sensitive graphical user guidance makes working with digital readouts from ACU-RITE a pleasure.

Together with the linear scales from ACU-RITE they form an economic and effective package solution for initial setup or retrofitting on your machine tool.

Contents

Digital readouts		
Selection guide		**4**
Functions	Installation guide	**6**
	Probing functions for presets	**6**
	Tool compensations	**6**
	Distance-to-go display	**7**
	Dynamic zoom	**7**
	Hole patterns	**8**
	Programming of machining steps	**8**
	Assistance for working with lathes	**9**
Specifications	**DRO100** – Simple digital readout for one, two or three axes	**10**
	DRO203 – Versatile digital readout for up to three axes	**12**
	DRO300 – Programmable digital readout for three or four axes	**14**
Accessories	Edge finder	**16**
	Mounting components	**17**
	IB 2X external encoder input box for DRO300	**19**
	IOB 610 external input/output unit for DRO300	**20**
Linear encoders		
Linear encoders – For manually-operated machine tools		**22**
Mounting instructions		**23**
Specifications	**SENC 50** – Compact linear encoder for limited installation space	**24**
	SENC 150 – Standard linear encoder	**26**
Interfaces	Incremental signals ⊓⊔ TTL	**28**
Electrical connection	General electrical information	**29**
	Cables for digital readouts	**30**

Selection guide

	Number of axes	Reference points/ Tool data	Functions
DRO100 Digital readout for general applications with up to **three axes** • 7″ TFT color display • Splash-proof membrane keyboard	1, 2 or 3	1 datum	*General:* • Absolute/incremental display • mm/inch switching *Turning:* • Radius/diameter display
DRO203 Digital readout for milling, drilling and boring machines, as well as for lathes with **three axes** • 7″ TFT color display • Splash-proof full-travel keyboard	Up to 3	10 datums 16 tools	*General:* • Distance-to-go display with graphic positioning aid *Milling and drilling:* • Probing function using tool • Tool radius compensation • Hole patterns (circular and linear patterns) *Turning:* • Radius/diameter display • Separate/sum display
DRO300 Digital readout for milling, drilling and boring machines, as well as for lathes with **up to three axes** • 7″ TFT color display • Program memory • Splash-proof full-travel keyboard • Switching inputs/outputs (via IOB 610) • Up to six encoder inputs with the IB 2X	Up to 4	10 datums 99 tools	*General:* • Distance-to-go display with graphic positioning aid • Program memory for up to 8 programs with 250 steps each *Milling and drilling:* • Probing functions for KT edge finder • Tool radius compensation • Hole patterns (circular and linear patterns) *Turning:* • Taper calculator • Radius/diameter display • Separate/sum display

	Encoder inputs	Accessories	Data interface	Models	Page
	⊓⊔TTL	–	USB Type C	**DRO101, DRO102, DRO103**	**10**
	⊓⊔TTL	–	USB Type C	**DRO203**	**12**
	⊓⊔TTL	For KT edge finder; additional axes via IB 2X; switching input/outputs via IOB 610	USB Type C	**DRO303, DRO304**	**14**

Functions

– Installation guide
– Probing functions for presets (DRO300 only)
– Tool compensations (DRO203 & DRO300 only)

Installation guide
At first switch-on, an installation guide will guide you step by step through the configuration of the unit. During this procedure, you can select the connected encoder directly from a list and thereby adopt all of the encoder parameters. It only takes a few moments to configure the basic functions of the digital readout.

You can then separately configure further settings such as scaling factor, error compensation, etc.

Easy setup with probing functions
A very useful accessory for datum setting is the HEIDENHAIN KT edge finder: simply move the edge finder toward a side of the workpiece until the stylus deflects. The digital readout stores the exact position on its own and automatically takes into account the direction of approach and the radius of the stylus or the tool. For this purpose, the digital readout provides the following probing functions:

- Workpiece edge as reference line
- Workpiece centerline as reference line
- Circle center as datum

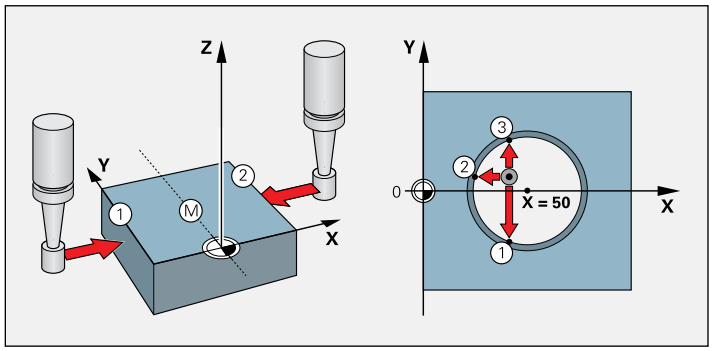

Convenient datum setting with an edge finder

Tool compensation for milling machines
The ACU-RITE digital readouts save tool data in a tool table (i.e., diameter and length of the tool used). The data can come from preset tools or be measured on the machine.

When positioning in distance-to-go mode, the readouts take the tool radius (R+ or R–) in the machining plane into account and consider the tool length (ΔL) in the spindle axis.

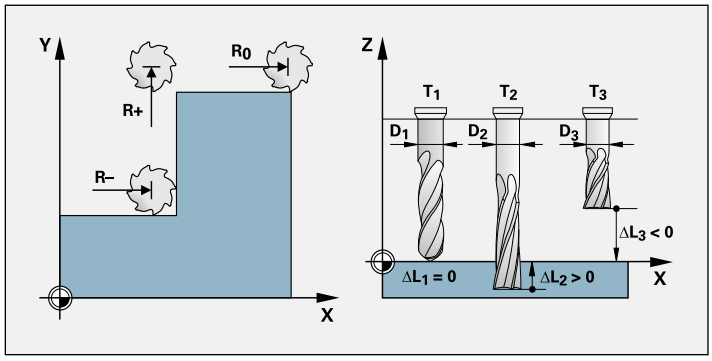

Compensation of tool radius and length

Determining and storing tool compensation values on lathes
You can store the data for the tools you insert in the turret or quick-change holder in the tool table:

- Enter the tool position directly when turning the first diameter, or
- "freeze" the current axis position value, retract the tool, measure the turned diameter and then enter that value.

Changing the datum
If you change the workpiece or a datum, then you can set a new preset. The tool data are then automatically referenced to the new datum and do not need to be changed.

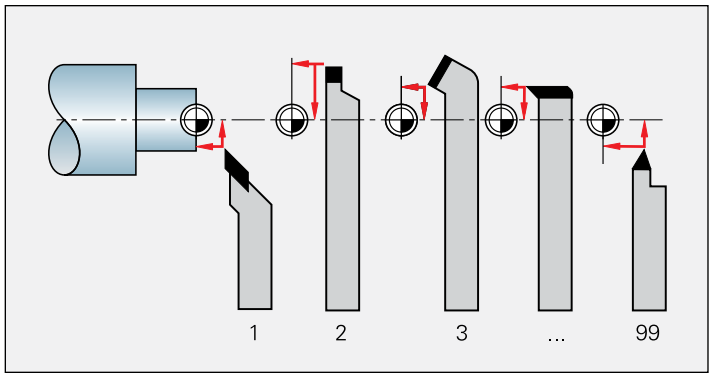

– Distance-to-go display
– Dynamic zoom

Distance-to-go display for turning and milling
The distance-to-go display feature simplifies your work considerably: you enter the next nominal position, and the display shows you the distance remaining to the target position. This means that you simply move to the display value zero.

When you use the distance-to-go feature for milling, the digital readout can compensate for the milling radius. In this way you can directly use the drawing dimensions without having to do any conversions. You no longer have to remember any complicated values.

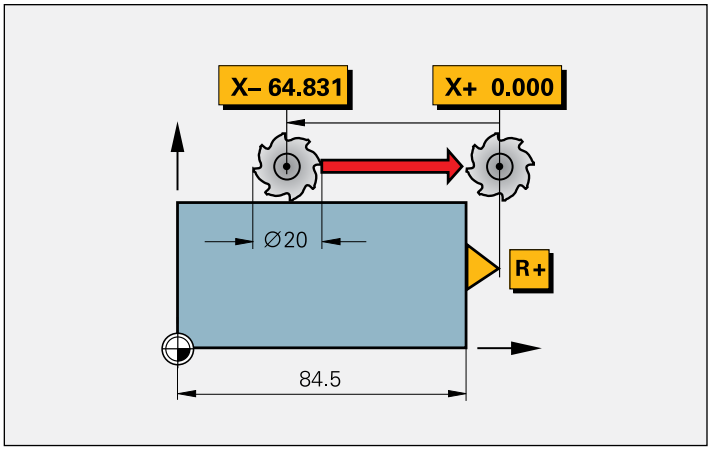

The distance-to-go display is enhanced by a "near zero" message: as you traverse to zero, a square cursor moves into a target fork. The "near zero" message is configurable for each axis.

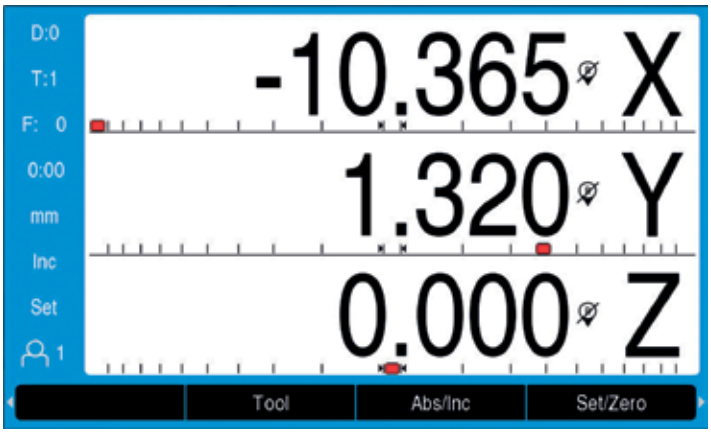

Dynamic zoom
The dynamic zoom feature offers a significant improvement in position value readability. Once activated, the display value for the axis currently being moved is maximally enlarged. This occurs in four steps depending on the number of digits in the respective numerical value. For small numbers (i.e., numbers close to zero), the character height can be increased from 17 mm (standard height) to 25 mm. The operator immediately sees which axis is currently moving and can also easily read the numerical value from a greater distance. When the axis stops moving, the display returns to its standard size after a second has elapsed.

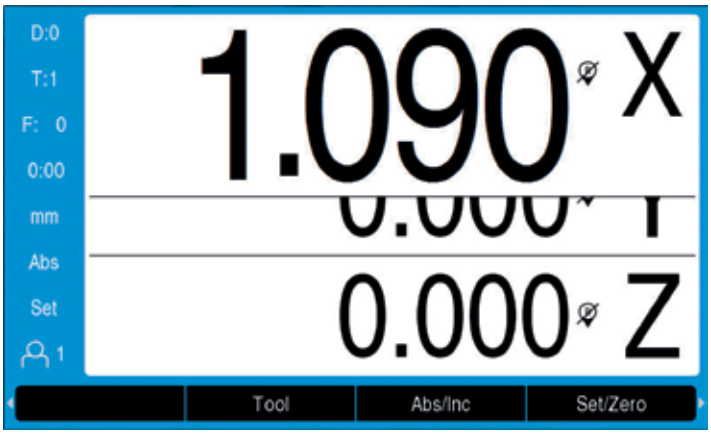

Functions

– Hole patterns (DRO203 & DRO300 only)
– Programming of machining steps (DRO300 only)

Automatic calculation of bolt hole patterns for milling and drilling
In milling machine mode, you can machine **circular hole patterns** (full circle or circle segments) and **linear hole patterns** without much calculation.

You simply enter the geometric dimensions and the number of holes from the drawing. The display calculates the coordinates of the individual holes in the working plane. You only need to traverse "to zero" and drill. The display then shows the next position. The **graphic display** is a particularly useful feature: it lets you verify your input for the programmed bolt-hole pattern before machining.

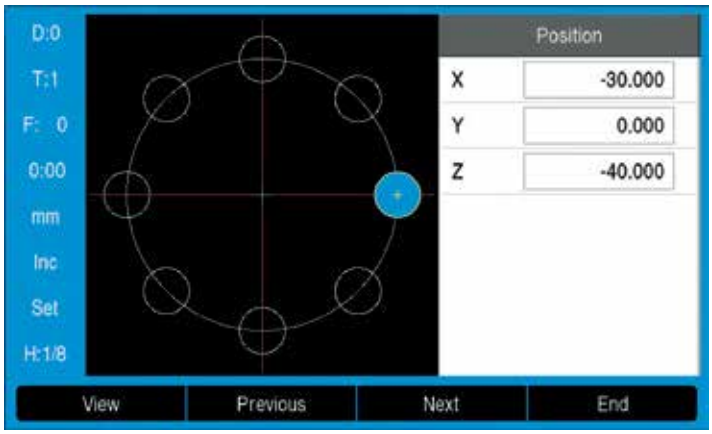

Programming machining steps
The programming functions of the DRO300 allow you to save repetitive machining steps. For example, you can save all of the machining steps required for a small batch in the form of a program. In the RUN mode of operation, the distance-to-go display will guide you step-by-step to the programmed positions.

You create programs by typing in the positions step by step. The fixed cycles such as bolt hole circle, linear hole pattern, incline mill form or circular arc keep your programs short and save you programming time. In the course of your work, the readout presents each nominal position in the proper sequence. You need only move from one position to the next.

– Assistance for working with lathes

Radius/diameter display
In lathe mode, you can see the positions of the transverse axis in either radius or diameter values. You can switch at a keystroke.

Sum display of longitudinal axes
In lathe mode, the positions of the saddle and the top slide are displayed either separately or as the sum of both values.

- If you select **separate displays**, the position values are referenced to the datum for each individual axis. If only the saddle is moved, the displayed value for the top-slide axis remains unchanged
- If **sum display** is selected, the counter adds both values while taking the algebraic sign into account. You can thereby read the absolute position of the tool in relation to the workpiece datum without having to perform calculations.
- **Vectoring (DRO203, DRO300)**
  The vectoring function breaks down a movement into its longitudinal and crossfeed axis components. If you are turning threads, for example, vectoring lets you see the diameter of the thread in the X axis, even though you are moving the compound axis handwheel

Taper turning made easy (DRO203, DRO300)
If taper dimensions do not include the angle, the integrated taper calculator will help you with the calculation. Simply enter the taper ratio or the two diameters and the length. The correct angle for the top slide will be displayed immediately.

Constant surface speed (DRO300)
Particularly in taper turning or parting, the surface speed usually changes along with the diameter. But a constant surface speed is better for optimum machining results and long tool life. In conjunction with the IOB 610 output module, the DRO 300 digital readout therefore makes it possible to control a constant surface speed contingent on the current workpiece diameter.

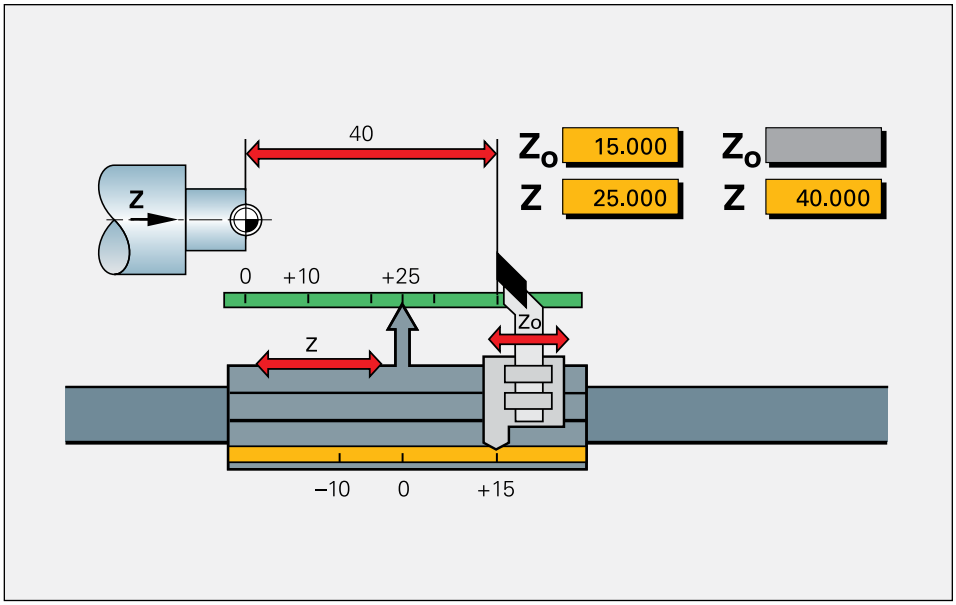

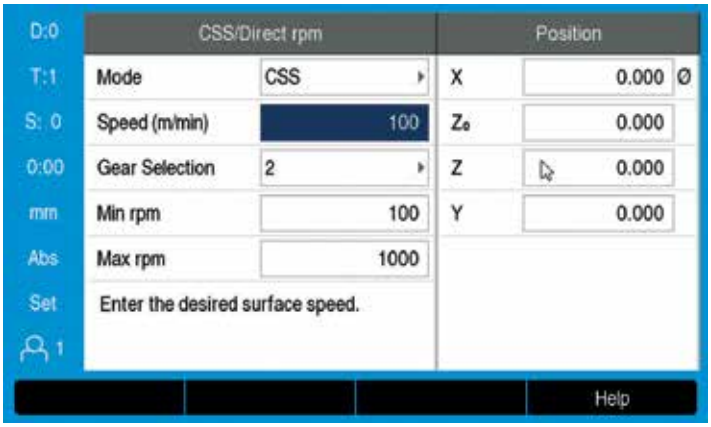

DRO100

Simple digital readout for one, two or three axes

The ACU-RITE DRO100 digital readouts are well-suited for general applications on milling, drilling, boring and lathe machines with one, two, or three axes.

Design
With its sturdy housing and splash-proof membrane keyboard, the DRO100 is built for the workshop. The DRO100 displays position values, status information, and additional useful data on a TFT color screen.

Functions
The most important functions are available quickly and directly via function keys. If the DRO100 is connected to a lathe, then you can simply switch from radius to diameter display. For lathes with a separate top slide, the **sum display** feature on the 3-axis version of the DRO100 allows you to display the saddle and top slides either together or separately.

Data Interfaces
A USB port enables the writing and reading out of data and files.

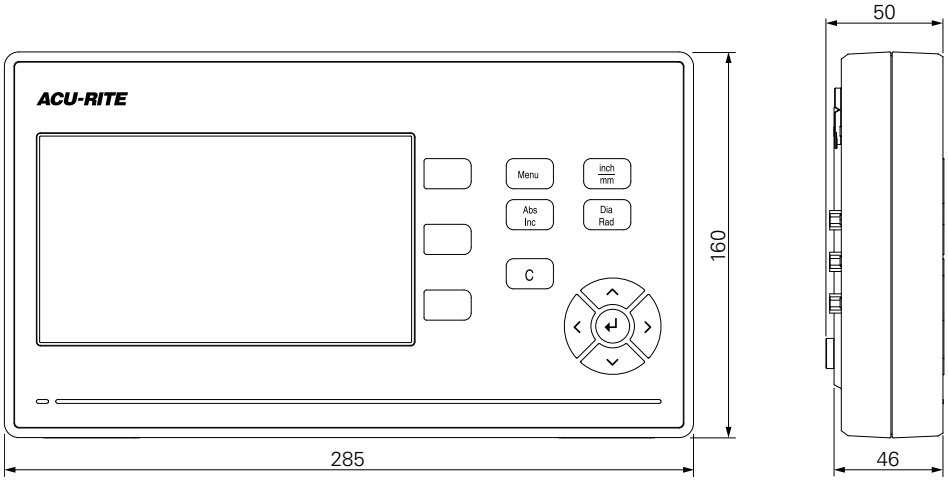

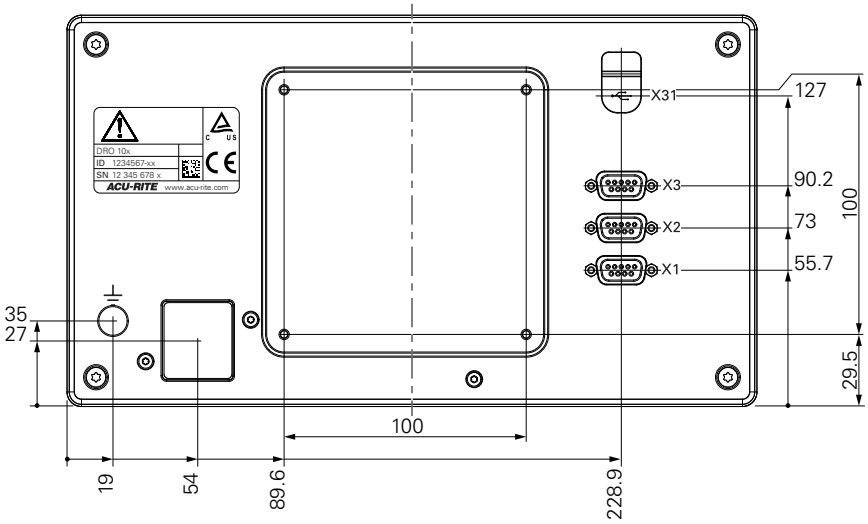

mm
Tolerancing ISO 8015
ISO 2768 - m H
≤ 6 mm: ±0.2 mm

	DRO100
Axes*	1, 2 or 3
Encoder inputs	⊓⊔ TTL
Display step[1]	Adjustable, max. 7 digits *Linear axis:* 1 mm to 0.0001 mm *Rotary axis:* 1° to 0.001° (00° 00‘ 01 ”)
Display	7” TFT color screen (15:9); resolution 800 x 480 pixels for position values and dialog
Status display	Feed rate, ABS/INC, mm/inch
Functions	• 1 datum • REF reference-mark evaluation for distance-coded or single reference marks • Distance-to-go mode • mm/inch switching • Absolute-incremental display • Integrated help function • Axis coupling • Radius/diameter display
Error compensation	Linear axis error
Data interface	USB connection, Type C
Optional accessories	Stand, holder for mounting arm, protective cover
Power connector	AC 100 V to 240 V (±10 %), 50 Hz to 60 Hz (±5 %), ≤ 33 W
Operating temperature	0°C to 45°C (storage temperature –20°C to 70°C)
Protection EN 60529	IP 40; front panel IP 54
Mass	1.6 kg

***** Please select when ordering
[1] Depends on the signal period of the connected encoder

DRO203

Versatile digital readout for up to three axes

The ACU-RITE DRO203 digital readout is especially well-suited for use on milling, drilling, boring, and lathes machines with up to three axes.

Design
The DRO203 digital readout is designed as a sturdy upright unit with splash-proof full-travel keypad for use in a workshop. It is equipped with a 7" TFT color screen for position values, dialog, input displays, graphic functions, and for a graphic positioning aid.

Functions
The DRO203 digital readout is distinguished by its conversational dialog guidance. The **distance-to-go display** facilitates positioning tasks. You approach the next position quickly and reliably by simply traversing until the display reads zero.
The functions for the respective application are easy to activate via parameter input. Special functions are available for producing **hole patterns** (linear patterns and circular patterns).

You can easily switch between radius and diameter display when the position display is configured for turning. The digital readout also offers support for lathes with a separate top slide: the **sum display** feature allows you to display the saddle and top slides either together or separately. To set presets, simply touch the workpiece and **freeze the tool position.** Then retract and measure the workpiece with the tool out of the way.

Data interfaces
A USB port enables the writing and reading out of data and files.

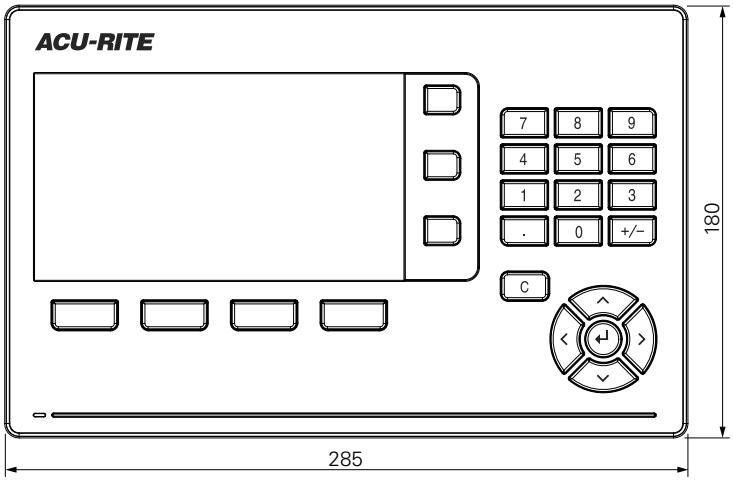

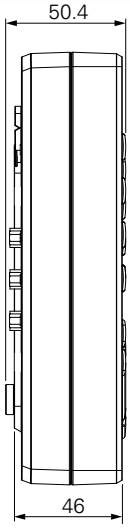

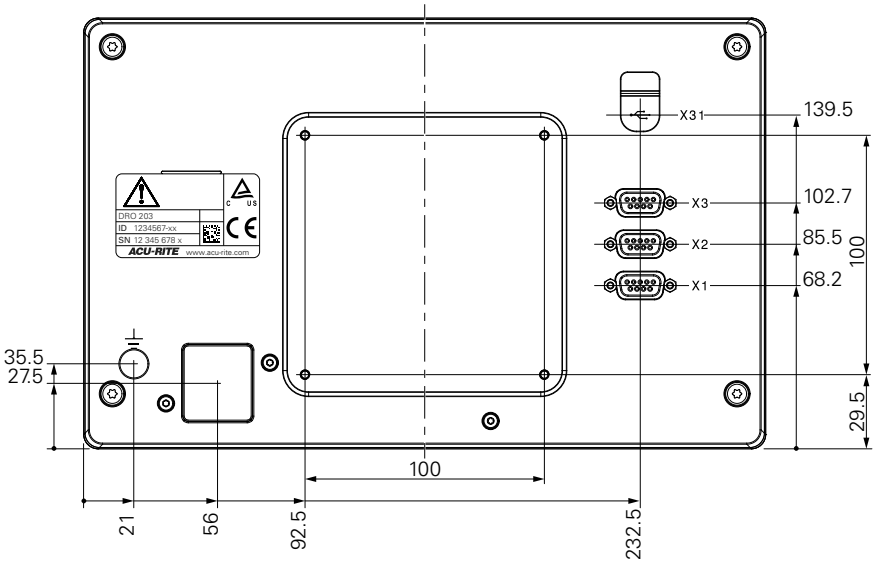

mm
Tolerancing ISO 8015
ISO 2768 - m H
≤ 6 mm: ±0.2 mm

	DRO203
Axes	2 or 3 (can be configured); various axis designations
Encoder inputs	⊓⊔ TTL
Display step[1]	Adjustable, max. 7 digits *Linear axis:* 1 mm to 0.0001 mm *Rotary axis:* 1° to 0.001° (00° 00‘ 01 ”)
Display	7” TFT color screen (15:9); resolution 800 x 480 pixels for position values and dialog
Status display	Tool, reference point, operating function, feed rate, ABS/INC, mm/inch, stopwatch
Functions	• 10 reference points • 16 tools • REF reference-mark evaluation for distance-coded or single reference marks • Distance-to-go mode • Scaling factor • mm/inch switching • Absolute-incremental display • Integrated help function • Graphic positioning aid (“near zero” warning) • Calculator
For milling/drilling/boring	• Calculation of positions for hole patterns (bolt circles, linear hole patterns) • Tool radius and tool length compensation • Linear hole patterns, bolt hole circles
For turning	• Taper calculator • Radius/diameter switching • Freezing the tool position for back-off • Vectoring: X/Y display of the traverse path with inclined top slide • Sum display for Z and Z_O (axis coupling)
Error compensation	• *Axis error:* Linear and multipoint over up to 200 points • *Backlash compensation:* for compensation of reversal error
Data interface	USB connection, Type C
Accessories	Stand, holder for mounting arm, protective cover
Power connector	AC 100 V to 240 V (±10 %), 50 Hz to 60 Hz (±5 %), ≤ 33 W
Operating temperature	0°C to 45°C (storage temperature –20°C to 70°C)
Protection EN 60529	IP 40; front panel IP 54
Mass	1.7 kg

[1] Depends on the signal period of the connected encoder

DRO300

Programmable digital readout for 3 or 4 axes

The ACU-RITE DRO300 is a versatile digital readout designed primarily for milling, drilling, boring, and lathe machines with up to four axes. A separate I/O unit provides switching input/outputs for simple tasks in automation.

Design
Thanks to its splash-proof full-travel keyboard, the DRO300 is exceptionally well-suited for use in a workshop. It supports all operations with intuitive interactive menus on its large, easy-to-read color flat-panel display.

Functions
The DRO300 has the same functions as the DRO203.

In addition, the DRO300 offers a connection for the KT 130 edge finder. This allows you to define presets and datums with speed and precision. The DRO300 digital readout supports you with special probing functions.

The DRO300 is also programmable, which makes it ideal for small-batch production on conventional machine tools. The DRO300 allows you to store up to eight programs, each with up to 250 working steps. Programs are created by either keying them in step by step or by generating them using actual position capture (teach-in programming).

Data interfaces
A USB port enables the writing and reading out of data and files.

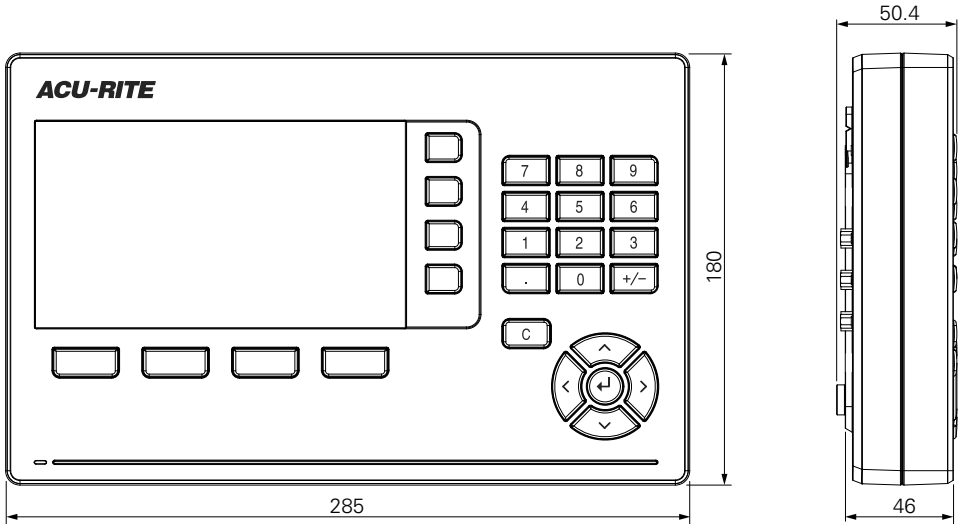

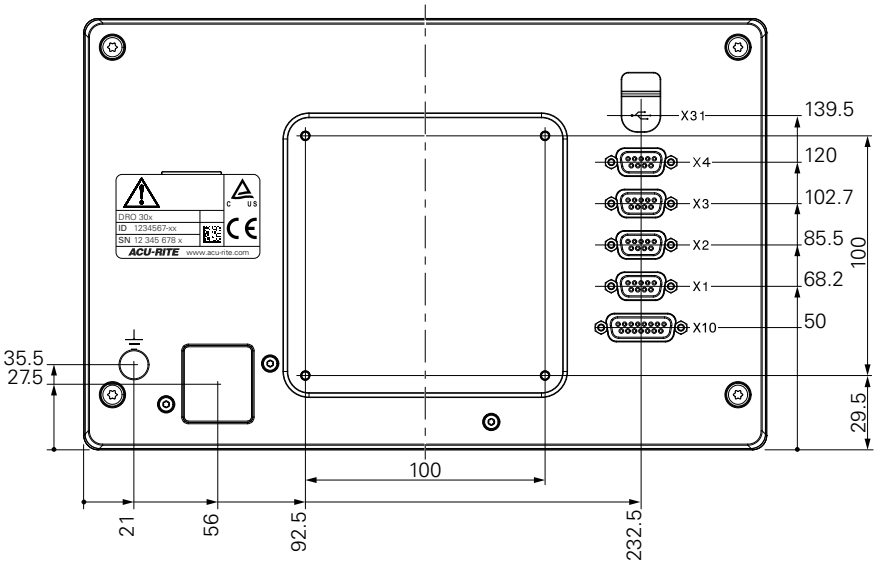

mm
Tolerancing ISO 8015
ISO 2768 - m H
≤ 6 mm: ±0.2 mm

	DRO300
Axes*	3 or 4; various axis designations
Encoder inputs	⊓⊔ TTL
Display step[1]	Adjustable, max. 7 digits *Linear axis:* 1 mm to 0.0001 mm *Rotary axis:* 1° to 0.001° (00° 00′ 01″)
Display	7″ TFT color screen (15:9); resolution 800 x 480 pixels for position values and dialog
Status display	Tool, reference point, operating function, feed rate, ABS/INC, mm/inch, stopwatch
Axis display	Switchable between DRO1 and DRO2
Functions	• 10 reference points • 99 tools • REF reference-mark evaluation for distance-coded or single reference marks • Distance-to-go mode • Scaling factor • mm/inch switching • Absolute-incremental display • Integrated help function • Graphic positioning aid (“near zero” warning) • Calculator
For milling/drilling/boring	• Calculation of positions for hole patterns (bolt circles, linear hole patterns) • Tool radius and tool length compensation • Probing functions for reference-point acquisition with KT edge finder: "Edge," "Centerline" and "Circle center" • Oblique line, circular arc • Linear hole patterns, bolt hole circles
For turning	• Taper calculator • Radius/diameter switching • Freezing the tool position for back-off • Vectoring: X/Y display of the traverse path with inclined top slide • Sum display for Z and Z_O (axis coupling)
Programming	8 programs with up to 250 steps
Error compensation	• *Axis error:* Linear and multipoint over up to 200 points • *Backlash compensation:* for compensation of reversal error
Data interface	USB connection, Type C
Switching I/O	• Input for edge finder • Further inputs/outputs over the IOB 610 external input/output unit
Accessories	Stand, holder for mounting arm, protective cover, KT 130 edge finder (for milling)
Power connection	AC 100 V to 240 V (±10 %), 50 Hz to 60 Hz (±5 %), ≤ 33 W
Operating temperature	0°C to 45°C (storage temperature –20°C to 70°C)
Protection EN 60529	IP 40; front panel IP 54
Mass	1.7 kg

*Please select when ordering
[1] Depends on the signal period of the connected encoder

Accessories
Edge finder

KT 130 edge finder
For any workpiece materials
With spiral cable
ID 283273-01

The KT 130 is a 3-D triggering edge finder. This means it can also be used for nonconducting materials. The stylus is deflected when it contacts the workpiece, and the edge finder sends a triggering signal over the cable to the DRO300 digital readout.

The KT 130 edge finder allows you to set reference points quickly and easily, without leaving marks on the workpiece.

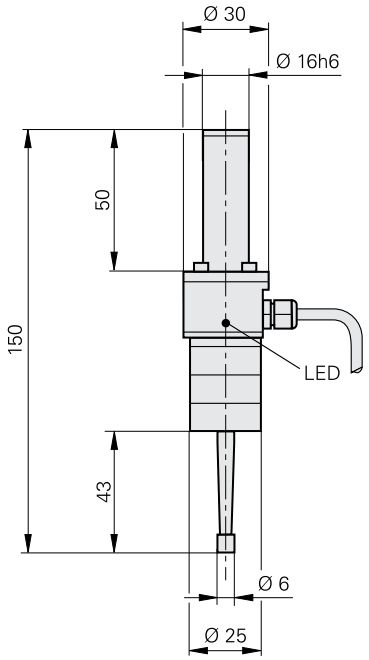

Mounting components

The back panel of the digital displays has a VESA-MIS 100 standard mounting interface. There are several possible mounting configurations:

- Single-Pos stand
- Mounting frame
- Mounting arm with holder

Accessories:

- **Stand**
  ID 1197273-01
- **Mounting arms**
  (refer to page 18)
- **Mounting frame**
  (accessory for DRO203 and DRO300)
  ID 1197274-01
  For mounting the digital readout in a housing or operating panel.
- **Holder for mounting arm**
  ID 1197273-02
  Is needed if a replacement unit is mounted to an already existing mounting arm.

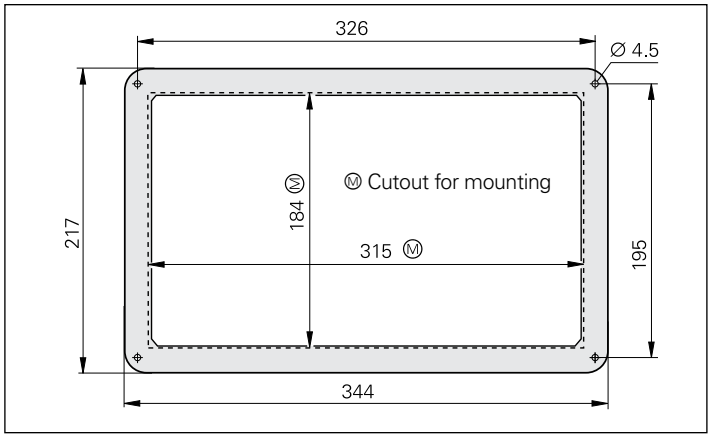

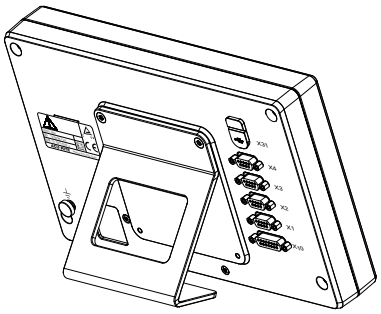

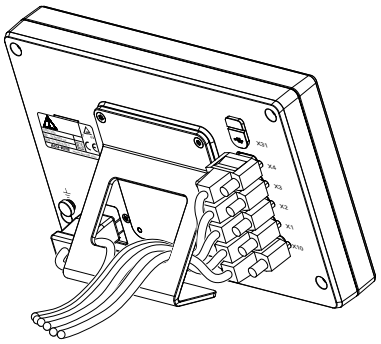

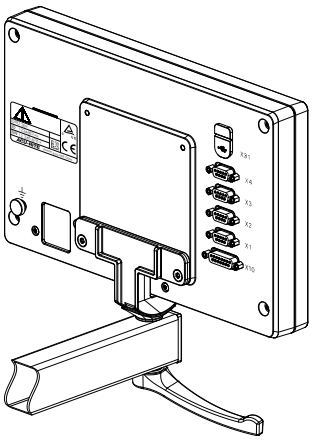

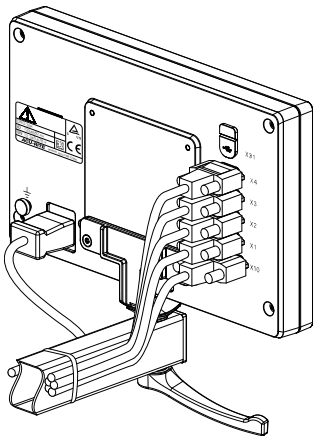

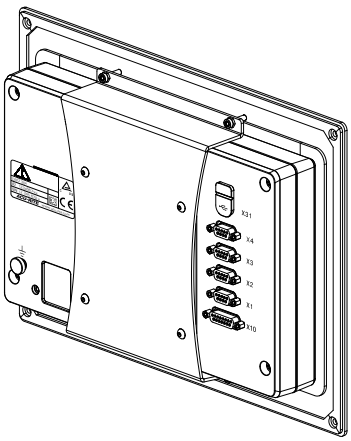

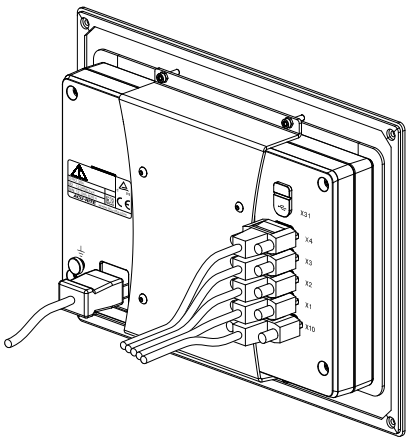

Accessories
Mounting components

You can use the mounting arm to easily place the display at a conveniently operable position. It can be attached to the machine either with a mounting bracket or directly. The display can also be swiveled with the holder mounted on the mounting arm.

Mounting arm A
Short version: 300 mm
ID 1223631-01
Long version: 670 mm
ID 1223636-01

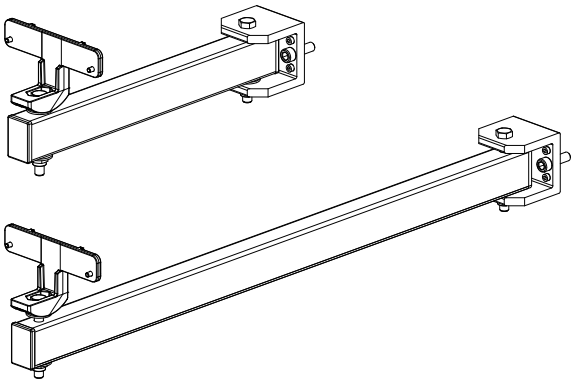

Mounting arm B
ID 1223632-01

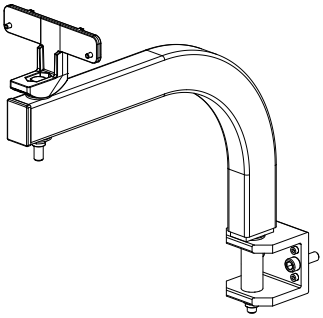

Mounting arm C
ID 1223637-01

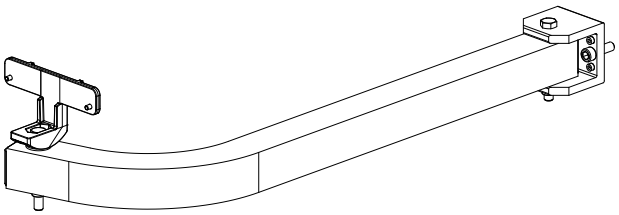

Mounting arm D
ID 1223634-01

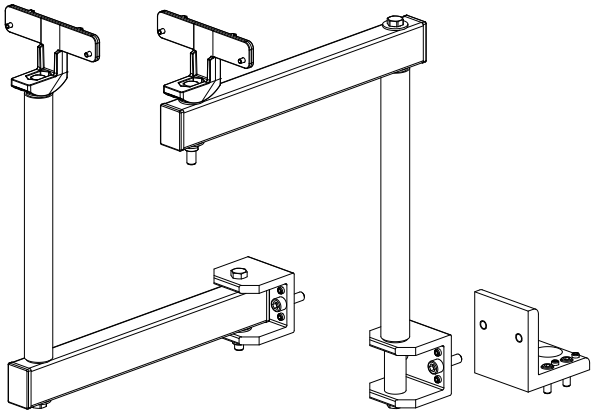

U-section beam with holder
Fits mounting arms A and B
ID 1223635-01

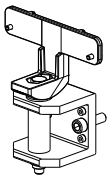

IB 2X external encoder input box for DRO300

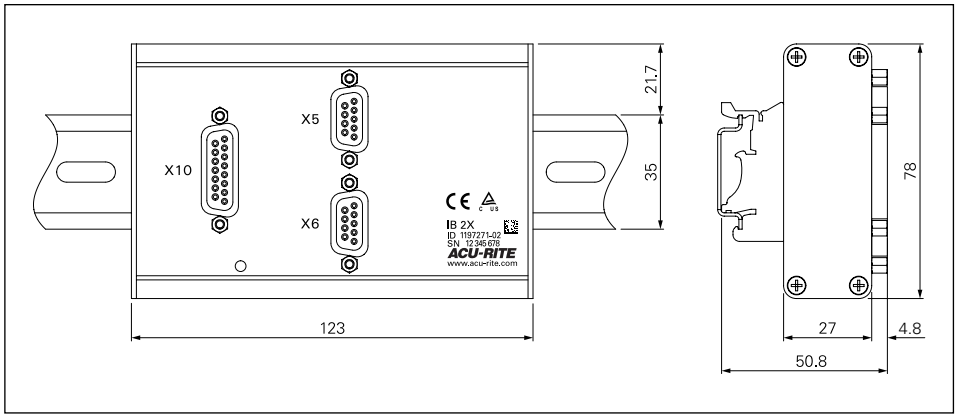

The IB 2X external unit provides two additional encoder connections when connected to a compatible digital readout. It must be mounted on a standard 35 mm, DIN EN 50022 rail to ensure the correct and intended operation of the product.

IB 2X external encoder input box

Accessories:
Connecting cable complete with connectors, between IB 2X and DRO
ID 1226509-xx

Distribution cable (Y cable) complete with connectors, for parallel connection of IB 2X, IOB 610, and KT 130 on DRO
ID 1226398-01

X10

On the IB 2X and IOB 610

8 7 6 5 4 3 2 1
15 14 13 12 11 10 9

1	2	3	4	5	6	7	8
0 V	/	Signal low	/	/	DC 5 V	0 V	0 V
9	**10**	**11**	**12**	**13**	**14**	**15**	
Signal high	/	/	Value Output Contact	/	Value Output Pulse	0 V	

Vacant pins or wires must not be used.

X5, X6

TTL

5 4 3 2 1
9 8 7 6

1	2	3	4	5	6	7	8	9
/	A+	A-	B+	B-	GND	DC 5V	R-	R+

Vacant pins or wires must not be used.

	IB 2X
Encoder interfaces	2 – TTL; Max. current 300mA; max. input frequency 500kHz; 9-Pin D-Sub
Output	1 – 15-Pin M D-Sub (X10)
Mounting	On a standard NS 35mm DIN rail in an electrical cabinet or on a stand
Protection EN 60529	IP 40 (intended for indoor use only)
Voltage supply	Via the DRO
Cable length	Do not exceed a maximum combined cable length of 30m
Storage temperature **Operating temperature**	0°C … 45°C -20°C … 70°C

Accessories

IOB 610 external input/output unit for DRO300

The DRO300 provides application-dependent additional functions that can be used when the IOB 610 external input/output unit is connected.

IOB 610 external input/output unit
ID 1197271-01
The IOB 610 input/output unit is mounted on a standard NS 35 rail (DIN 46 227 or EN 50 022).

It is connected to the DRO300 using the touch probe input. LEDs show the power supply, the data transmission and the status of the inputs and outputs.

Accessories:
Connecting cable complete with connectors, between IOB 610 and DRO300
ID 1226509-xx

Distribution cable complete with connectors, for parallel connection of IOB 610 and KT 130 on DRO300
ID 1226398-01

The additional functions can be configured on the DRO300 when the IOB 610 is connected.

	IOB 610
6 switching inputs	Zero reset of axes 1 to 4 (for milling applications) Recognition of max. 4 gear ranges (for turning applications) External activation of CSS (for turning applications)
10 switching outputs	9 relay outputs as switching functions (for milling applications) 1 relay output for readiness
1 analog output	0 V to 10 V *Turning mode:* For constant surface speed *Milling mode:* For controlling the spindle speed
Voltage supply	Via DRO300
Cable length	≤ 4 m to DRO300
Operating temperature **Storage temperature**	0°C to 45°C -20°C to 70°C

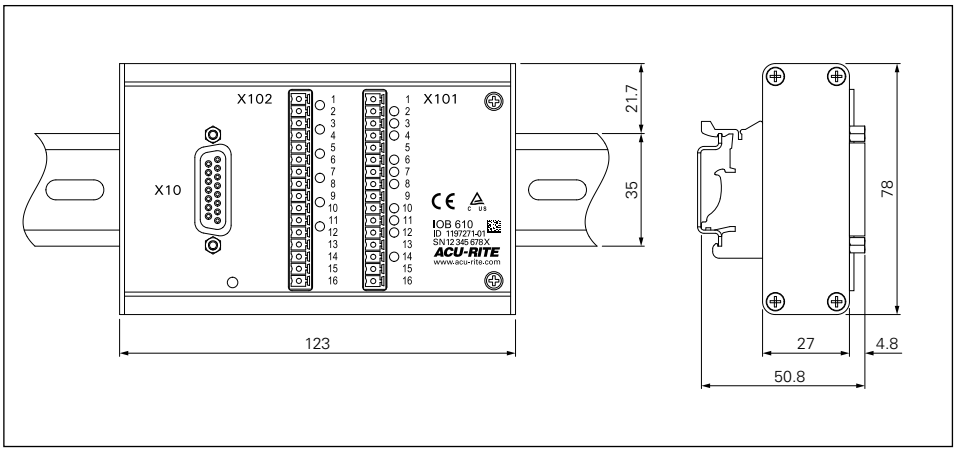

Switching inputs

The switching inputs are active when a HIGH signal (contact or pulse) is present. They are isolated and can be supplied externally or internally.

Signal level of the switching outputs
$0\,V \leq U_L \leq 1.5\,V$
$4.5\,V \leq U_H \leq 26\,V$
$I_L \leq 25\,mA$
$t_{min} \geq 100\,ms$

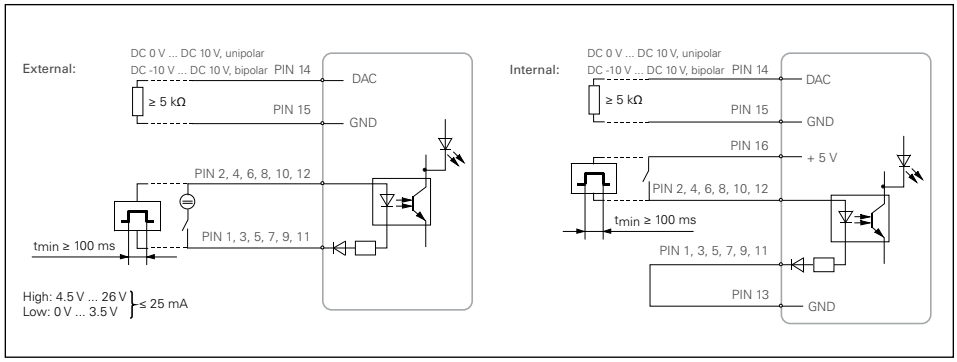

Zero reset
In the milling mode, each axis can be set to the display value 0 over an external signal.

Detection of gear ranges
In turning mode, four switching inputs are available for the recognition of gear stages.

Switching outputs

The IOB 610 features ten floating relay outputs.

Standby

The standby output is at LOW level if the DRO300 cannot operate the IOB (e.g., not switched on, cable disconnected, etc.).

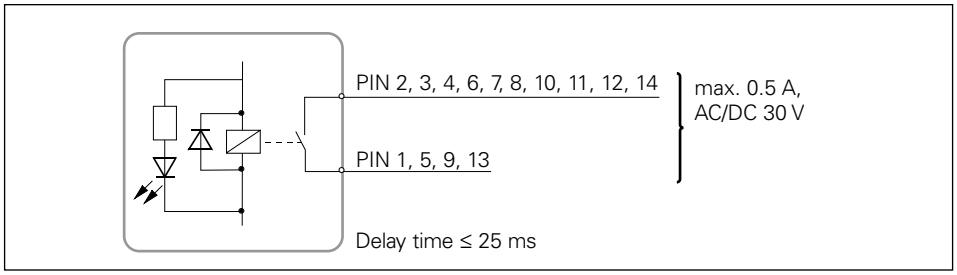

Switching functions

(for milling applications)

One or more switching ranges or switching points can be defined for an axis. The **switch-off ranges** are located symmetrically around the display value 0. If **switching points** are used, the relay activates when the position display reaches a specific value. The **direction** function switches when the algebraic sign is changed.

You can set whether:

- the switching function should apply to the actual value or distance-to-go mode,
- the relay will open or close when the condition is met
- or the relay remains activated as long as the switching condition is met (continuous mode) or for a specified duration (pulsed mode).

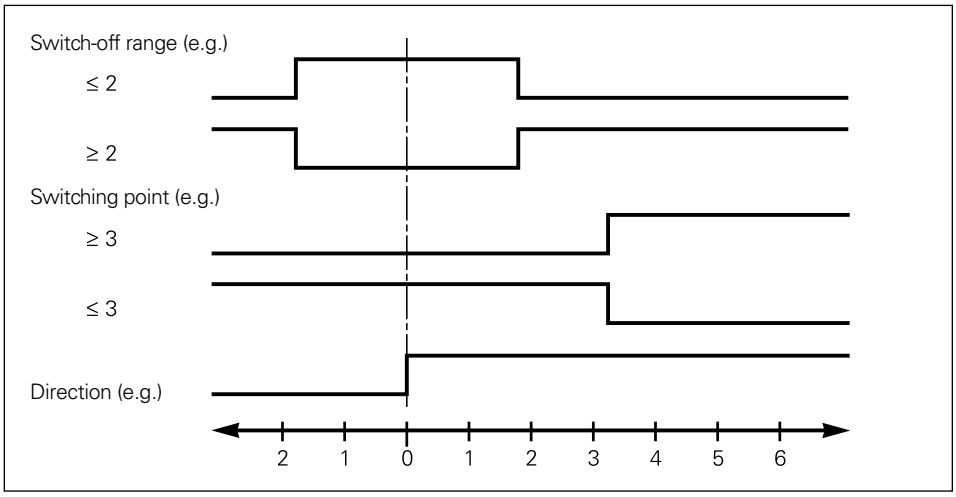

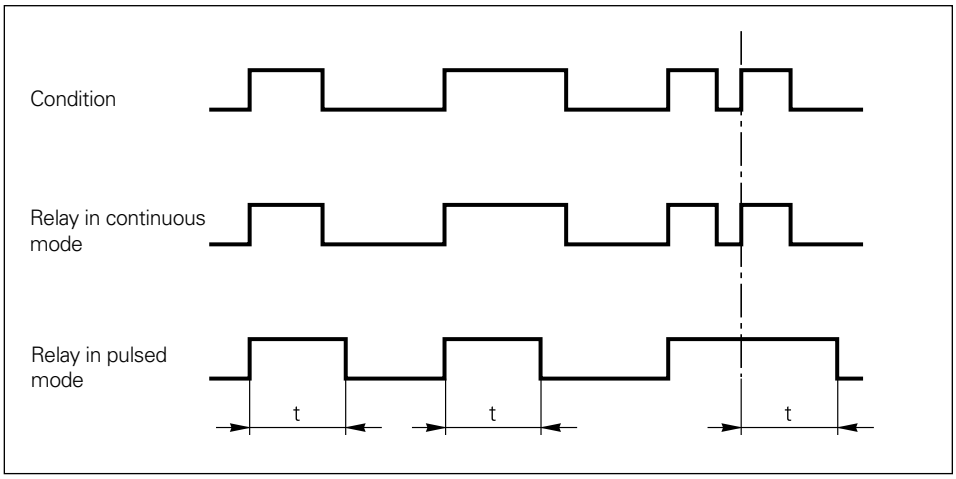

Analog output

Constant surface cutting speed CSS

(only in turning applications)

CSS provides spindle speed control as the diameter of the workpiece changes. A speed command signal is sent to the inverter of the spindle motor via the analog interface (DAC 0 V to 10 V) of the IOB 610. The maximum and minimum permissible spindle speeds can be specified. In addition, a maximum of four operating gears can be taken into account. The DRO300 recognizes the current gear stage by means of the switching inputs of the IOB 610. CSS control can also be started remotely (via an input to the CSS board) with an external switch.

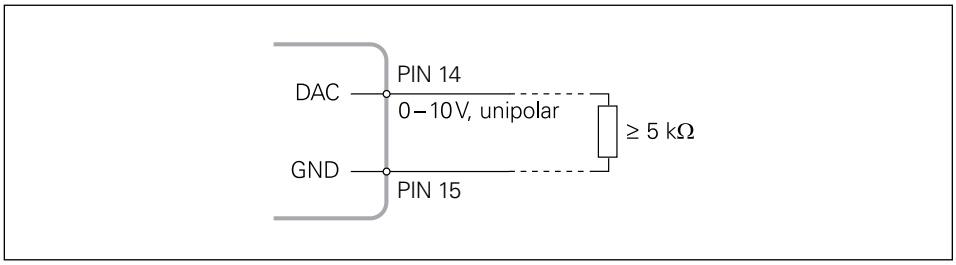

Controlling the spindle speed

(only in milling applications)

With the analog outputs, the speed of the spindle on milling machines can be controlled in an open controlled loop. A spindle speed can be assigned to each tool defined in the tool table. The speed can be manually adjusted during machining.

Linear Encoders

For manually operated machine tools

For typical applications on manually operated machine tools, such as milling machines or lathes, **display steps of 10 µm** are sufficient. This is provided by the linear encoder of the SENC 50 and SENC 150 series without interpolation.

Jig boring machines, grinding machines, and measuring and inspection tasks normally require **display steps of 1 µm** and better. The SENC 50 and SENC 150 with integral 5-fold or 10-fold interpolation are suitable for these higher requirements.

For **limited installation space,** for example on the slide of a lathe, the SENC 50 linear encoder may be the best solution.

The SENC 150 linear encoders are used as universal linear encoders under **normal mounting conditions**.

Mounting instructions

SENC 50
This linear encoder with small cross section is fastened at points on a machined surface. With a back-up spar, only two points, one at each end, are sufficient.

For mounting without back-up spar, an intermediate support is required in addition. The encoder is mounted so that the sealing lips are directed downward or away from splash water.

Assembly
When mounting, the scale unit must be aligned at several points along the machine guideway. Stop surfaces or stop pins can also be used to align the scale.

The proper gap between the scale housing and scanning unit is ensured by the shipping brace. You must also ensure that the lateral tolerance is maintained.

Accessories
Back-up spar for SENC 50
ID 680803-xx

The SENC 50 can be mounted on a back-up spar to increase stability.

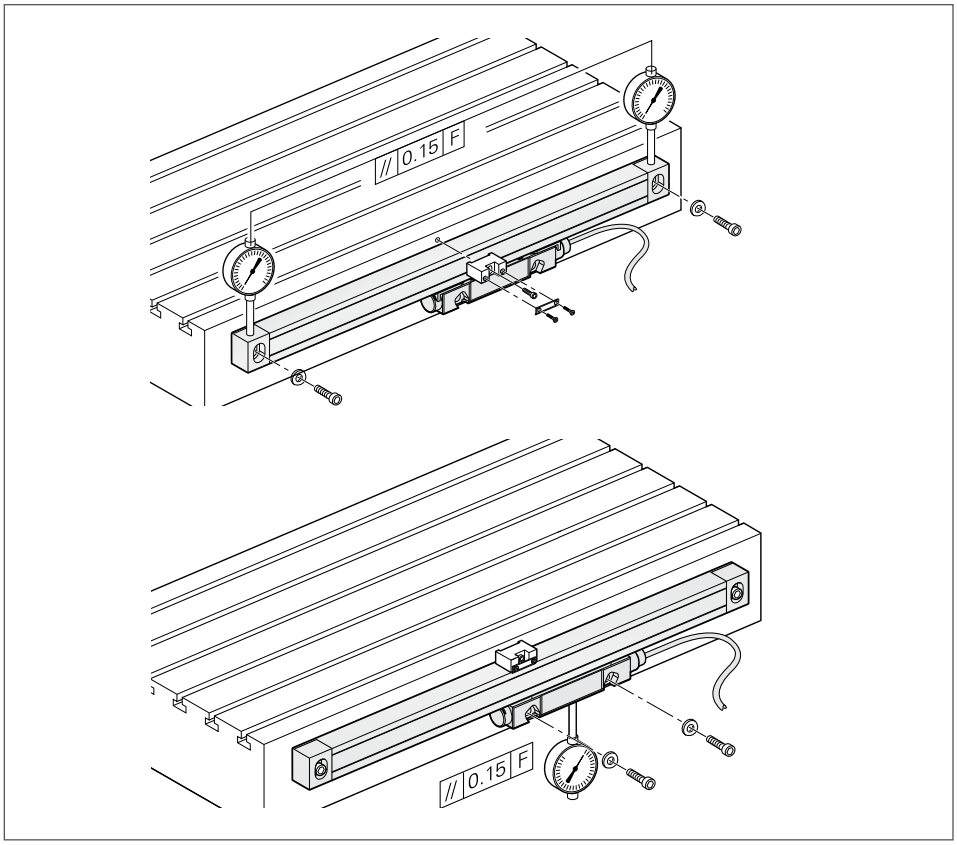

SENC 150
The SENC 150 is fastened at its ends by their mounting blocks to a machined surface. A support bracket is provided for measuring lengths above 625 mm.

If the SENC 150 is mounted with a back-up spar, there is no need for the support bracket. At measuring lengths of 1675 mm or more, the back-up spar is absolutely necessary. The encoder is mounted so that the sealing lips are directed downward or away from splash water.

Assembly
When the SENC 150 is mounted, the shipping brace already ensures the proper gap between the scale unit and the scanning unit. You need only align the scale unit at several points along the machine guideway.

Accessories
Back-up spar for SENC 150
ID 680116-xx

The SENC 150 can be mounted on a back-up spar to increase stability. At measuring lengths of 1675 mm or more, the back-up spar is absolutely necessary and is already included in delivery.

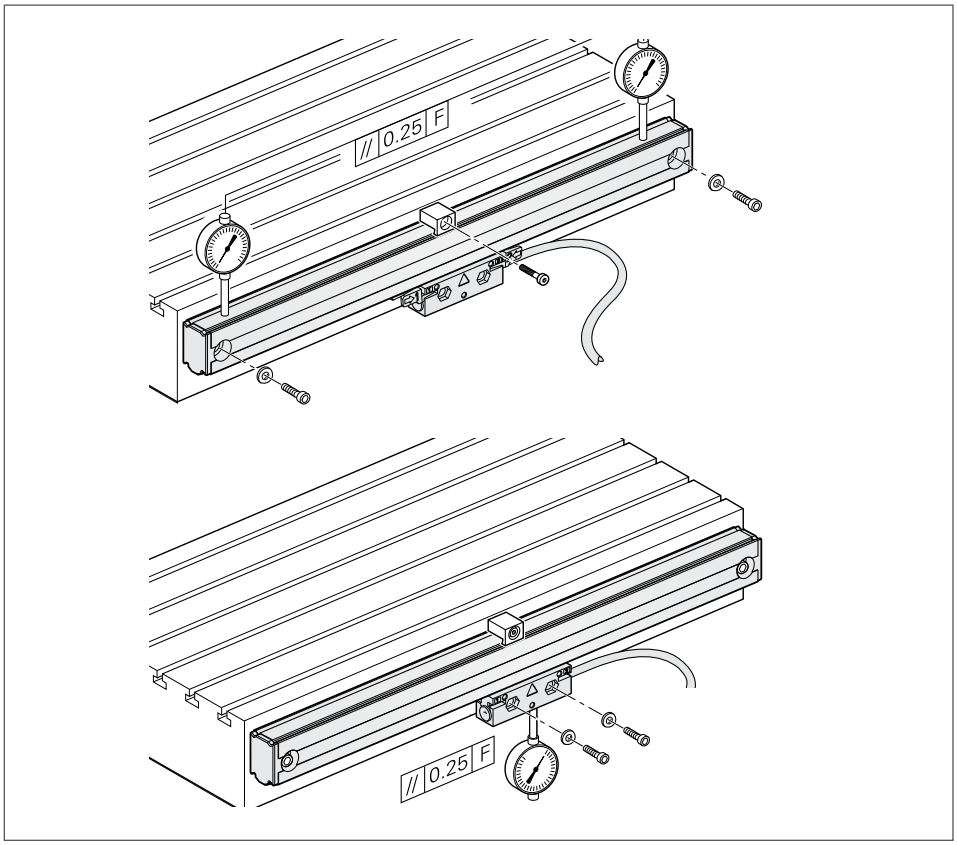

SENC 50

Incremental linear encoder
- **Extremely compact dimensions**
- **Measuring steps 5 µm to 0.5 µm**

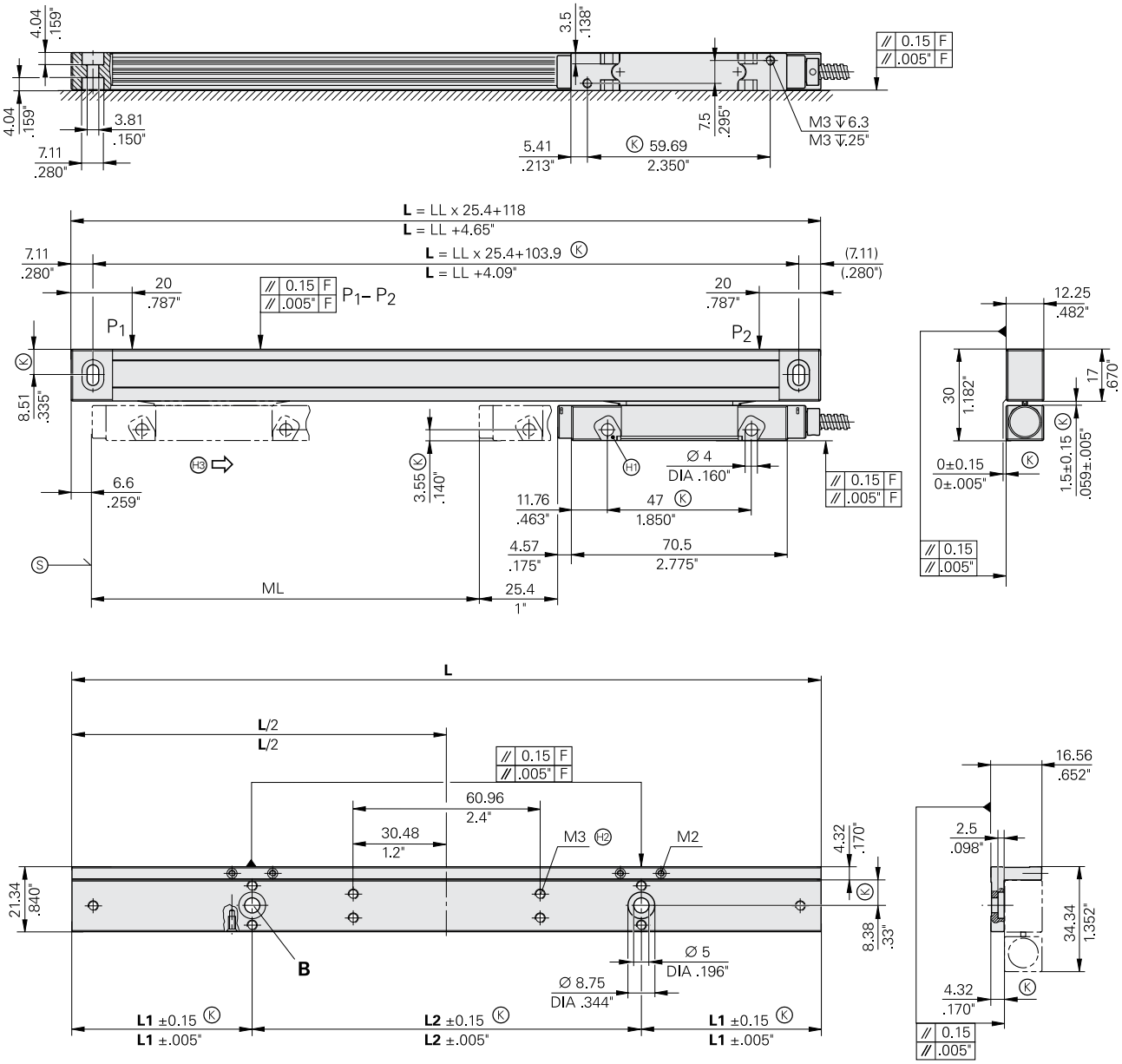

Tolerancing ISO 8015
Dimensions without tolerance ±0.2 mm (±.008 inches)

ML = Measuring length
P = Gauging points for alignment
Ⓢ = Beginning of measuring length
Ⓚ = Required mating dimensions
H1 = M4 nut usable
H2 = For aligning the back-up spar
H3 = Direction of scanning head motion for output signals in accordance with interface description

ML (mm)	LL (inch)	L	L1	L2	Qty. B
50	1	143.5/5.65″	20.96/0.825″	101.6/4″	2x
75	2	168.9/6.65″	20.96/0.825″	127.0/5″	2x
100	3	194.3/7.65″	33.66/1.325″	127.0/5″	2x
125	4	219.7/8.65″	46.36/1.825″	127.0/5″	2x
150	5	245.1/9.65″	59.06/2.325″	127.0/5″	2x
175	6	270.5/10.65″	71.76/2.825″	127.0/5″	2x
200	7	295.9/11.65″	84.46/3.325″	127.0/5″	2x
225	8	321.3/12.65″	97.16/3.825″	127.0/5″	2x
250	9	346.7/13.65″	46.36/1.825″	127.0/5″	3x
275	10	372.1/14.65″	59.06/2.325″	127.0/5″	3x
300	11	397.5/15.65″	71.76/2.825″	127.0/5″	3x
325	12	422.9/16.65″	84.46/3.325″	127.0/5″	3x
350	13	448.3/17.65″	97.16/3.825″	127.0/5″	3x
375	14	473.7/18.65″	46.36/1.825″	127.0/5″	4x
425	16	524.5/20.65″	71.76/2.825″	127.0/5″	4x
475	18	575.3/22.65″	33.66/1.325″	254.0/10″	3x
525	20	626.1/24.65″	59.06/2.325″	254.0/10″	3x

Specifications	SENC 50		
Measuring standard	Glass scale with incremental graduation		
Accuracy grade	±3 µm		
Measuring length ML*	Mounting spar* optional 50 75 100 125 150 175 200 225 250 275 300 325 350 375 425 475 525		
Incremental signals*	⊓⊔ TTL	⊓⊔ TTL x 5	⊓⊔ TTL x 10
Grating period Integrated interpolation Signal period	20 µm Without 20 µm	20 µm 5-fold 4 µm	20 µm 10-fold 2 µm
Measuring step[1]	5 µm	1 µm	0.5 µm
Reference marks	Distance-coded		
Voltage supply Without load	DC 5.1 V ±0.1 V/< 180 mA	DC 5.1 V ±0.1 V/< 220 mA	
Electrical connection	Cable in metal armor, with 9-pin D-sub connector; length: 3 m		
Cable length	≤ 6 m (total length with ACU-RITE cable)		
Traversing speed	≤ 60 m/min		
Required moving force	≤ 2.2 N		
Operating conditions	Temperature 0°C to 50°C; humidity 25% to 95% (non-condensing)		
Conditions for storage	Temperature –20°C to 70°C; humidity 20% to 95% (non-condensing)		
Protection EN 60529	IP53 when mounted as per Mounting Instructions		
Mass	0.5 kg + 0.3 kg/m measuring length		

***** Please indicate when ordering
[1] After 4-fold evaluation in the subsequent electronics

SENC 150

Incremental linear encoder
- **Sturdy design**
- **Measuring lengths up to 3 m**
- **Measuring steps 5 µm to 0.5 µm**

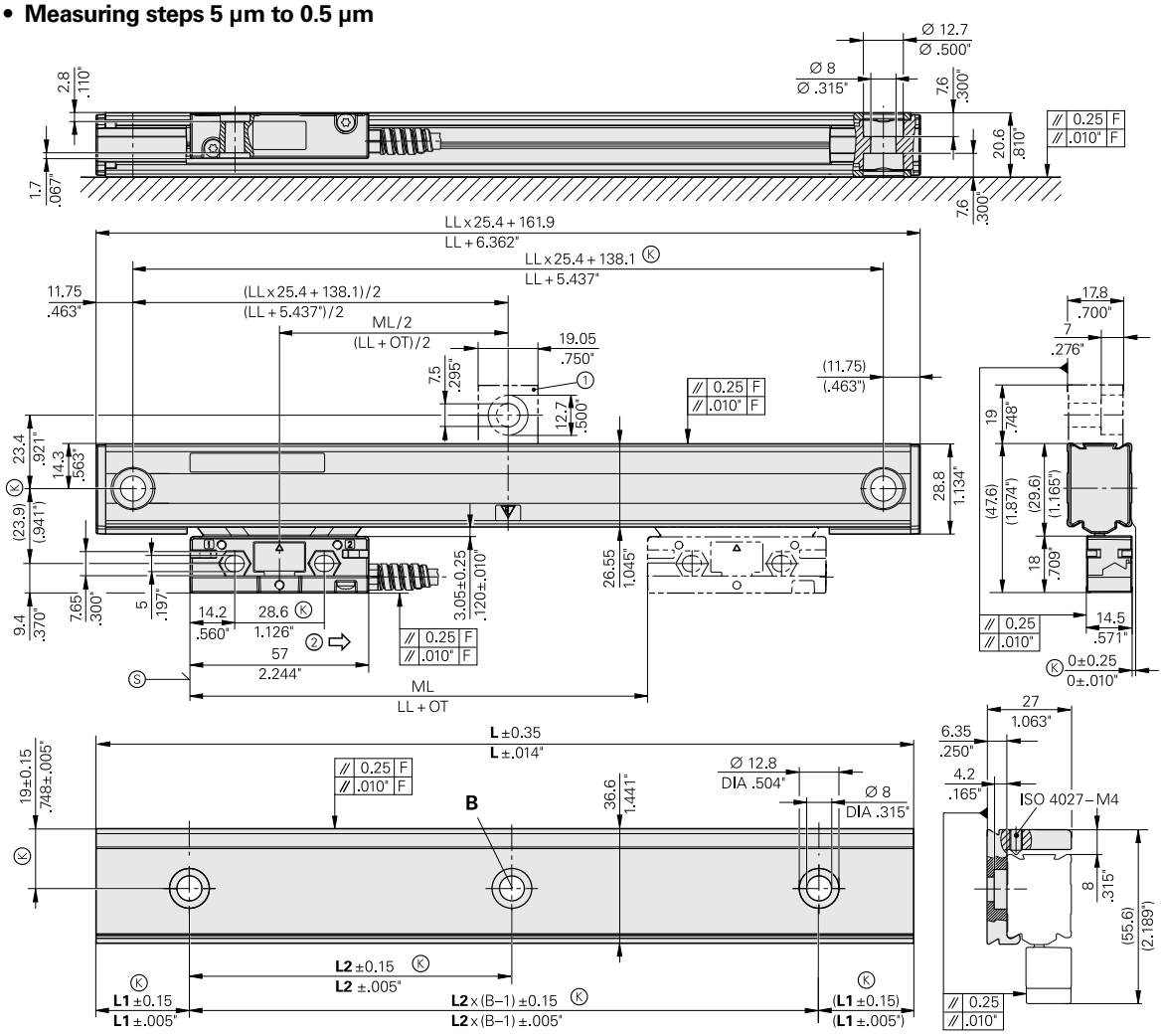

F = Machine guideway
ML = Measuring length in mm
LL = Measuring length in inches
OT = Overrun 1.75"

Ⓢ = Beginning of measuring length
Ⓚ = Required mating dimensions
1 = ML ≥ 625 mm/24 inches to ≤ 1550 mm/60 inches use mid-point fastening
2 = Direction of scanning head motion for output signals in accordance with interface description

Tolerancing ISO 8015
Dimensions without tolerance ±0.2 mm (±.008 inches)

ML	LL	L	L1	L2	B
50	1"	185.5 / 7.303"	29.25 / 1.152"	127 / 5"	2x
75	2"	211.5 / 8.327"	42.25 / 1.663"	127 / 5"	2x
100	3"	236.5 / 9.311"	54.75 / 2.156"	127 / 5"	2x
125	4"	261.5 / 10.295"	67.25 / 2.648"	127 / 5"	2x
150	5"	287.5 / 11.319"	80.25 / 3.159"	127 / 5"	2x
175	6"	312.5 / 12.303"	29.25 / 1.152"	254 / 10"	2x
200	7"	338.5 / 13.327"	42.25 / 1.663"	254 / 10"	2x
225	8"	363.5 / 14.311"	54.75 / 2.156"	254 / 10"	2x
275	10"	414.5 / 16.319"	80.25 / 3.159"	254 / 10"	2x
300	11"	439.5 / 17.303"	92.75 / 3.652"	254 / 10"	2x
325	12"	465.5 / 18.327"	105.75 / 4.163"	254 / 10"	2x
350	13"	490.5 / 19.311"	36.6 / 1.441"	417.3 / 16.43"	2x
375	14"	515.5 / 20.295"	130.75 / 5.148"	254 / 10"	2x
400	15"	541.5 / 21.319"	16.75 / 0.659"	254 / 10"	3x
425	16"	566.5 / 22.303"	29.25 / 1.152"	254 / 10"	3x
475	18"	617.5 / 24.311"	54.75 / 2.156"	254 / 10"	3x
525	20"	668.5 / 26.319"	80.25 / 3.159"	254 / 10"	3x
575	22"	719.5 / 28.327"	105.75 / 4.163"	254 / 10"	3x
600	23"	744.5 / 29.311"	118.25 / 4.656"	254 / 10"	3x
625	24"	769.5 / 30.295"	130.75 / 5.148"	254 / 10"	3x

ML	LL	L	L1	L2	B
675	26"	820.5 / 32.303"	29.25 / 1.152"	254 / 10"	4x
725	28"	871.5 / 34.311"	54.75 / 2.156"	254 / 10"	4x
775	30"	922.5 / 36.319"	80.25 / 3.159"	254 / 10"	4x
875	33"	998.5 / 39.311"	118.25 / 4.656"	254 / 10"	4x
925	35"	1049.5 / 41.319"	11.25 / 0.443"	256.8 / 10.109"	5x
950	36"	1074.5 / 42.303"	29.25 / 1.152"	254 / 10"	5x
1000	38"	1125.5 / 44.311"	54.75 / 2.156"	254 / 10"	5x
1050	40"	1176.5 / 46.319"	80.25 / 3.159"	254 / 10"	5x
1100	42"	1227.5 / 48.327"	105.75 / 4.163"	254 / 10"	5x
1250	48"	1379.5 / 54.311"	54.75 / 2.156"	254 / 10"	6x
1350	52"	1481.5 / 58.327"	105.75 / 4.163"	254 / 10"	6x
1400	54"	1531.5 / 60.295"	130.75 / 5.148"	254 / 10"	6x
1550	60"	1684.5 / 66.319"	80.25 / 3.159"	254 / 10"	7x
1675	65"	1811.5 / 71.319"	143.75 / 5.659"	254 / 10"	7x
1850	72"	1989.5 / 78.327"	105.75 / 4.163"	254 / 10"	8x
2000	78"	2141.5 / 84.311"	54.75 / 2.156"	254 / 10"	9x
2150	84"	2293.5 / 90.295"	130.75 / 5.148"	254 / 10"	9x
2300	90"	2446.5 / 96.319"	80.25 / 3.159"	254 / 10"	10x
2575	100"	2700.5 / 106.319"	80.25 / 3.159"	254 / 10"	11x
2825	110"	2954.5 / 116.319"	80.25 / 3.159"	254 / 10"	12x
3075	120"	3208.5 / 126.319"	80.25 / 3.159"	254 / 10"	13x

	SENC 150		
Measuring standard	Glass scale with incremental graduation		
Accuracy grade	±5 µm		
Measuring length ML*	Mounting spar* optional 50 75 100 125 150 175 225 275 300 325 350 375 400 425 475 525 625 675 725 775 825 875 925 950 1000 1050 1100 1250 1350 1400 1550		
	Back-up spar included in items supplied 1675 1850 2000 2150 2300 2575 2825 3075 [2]		
Incremental signals*	⊓⊔ TTL	⊓⊔ TTL x 5	⊓⊔ TTL x 10
Grating period Integrated interpolation Signal period	20 µm Without 20 µm	20 µm 5-fold 4 µm	20 µm 10-fold 2 µm
Measuring step [1]	5 µm	1 µm	0.5 µm
Reference marks	Distance-coded		
Voltage supply Without load	DC 5.1 V ±0.1 V/< 180 mA	DC 5.1 V ±0.1 V/< 220 mA	
Electrical connection	Cable in metal armor, with 9-pin D-sub connector; length: 4 m *1250 mm measuring length or more:* length 6 m		
Cable length	≤ 9 m (total length with ACU-RITE cable)		
Traversing speed	≤ 60 m/min		
Required moving force	≤ 3.4 N		
Operating conditions	Temperature 0°C to 50°C; humidity 25% to 95% (non-condensing)		
Conditions for storage	Temperature –20°C to 70°C; humidity 20% to 95% (non-condensing)		
Protection EN 60529	IP53 when mounted as per Mounting Instructions		
Mass	0.65 kg + 0.7 kg/m measuring length		

***** Please indicate when ordering
[1] After 4-fold evaluation in the subsequent electronics
[2] Solutions over 3m are available. Please visit www.acu-rite.com for details.

Interfaces

Incremental signals ⊓⊔TTL

ACU-RITE encoders with ⊓⊔TTL interface incorporate electronics that digitize sinusoidal scanning signals with or without interpolation.

The **incremental signals** are transmitted as the square-wave pulse trains A+ and B+, phase-shifted by 90° elec. The **reference mark signal** consists of one or more reference pulses R+, which are gated with the incremental signals. In addition, the integrated electronics produce their **inverse signals** A- and B- for noise-proof transmission. The illustrated sequence of output signals—with B+ lagging A+—applies to the direction of motion shown in the dimension drawing.

The distance between two successive edges of the incremental signals A+ and B+ through 1-fold, 2-fold or 4-fold evaluation is one **measuring step.** The subsequent electronics must be designed to detect each edge of the square-wave pulse.

Interface	Square-wave signals ⊓⊔ **TTL**
Incremental signals	**Two TTL square-wave signals A+, B+** and their inverted signals A-, B-
Reference mark signal	**One or more square-wave pulses R+** and their inverted pulses R-
Pulse width	90° elec.
Signal level	Differential line driver as per EIA standard RS-422 $U_H \geq 2.5$ V at $-I_H = 20$ mA $U_L \leq 0.5$ V at $I_L = 20$ mA

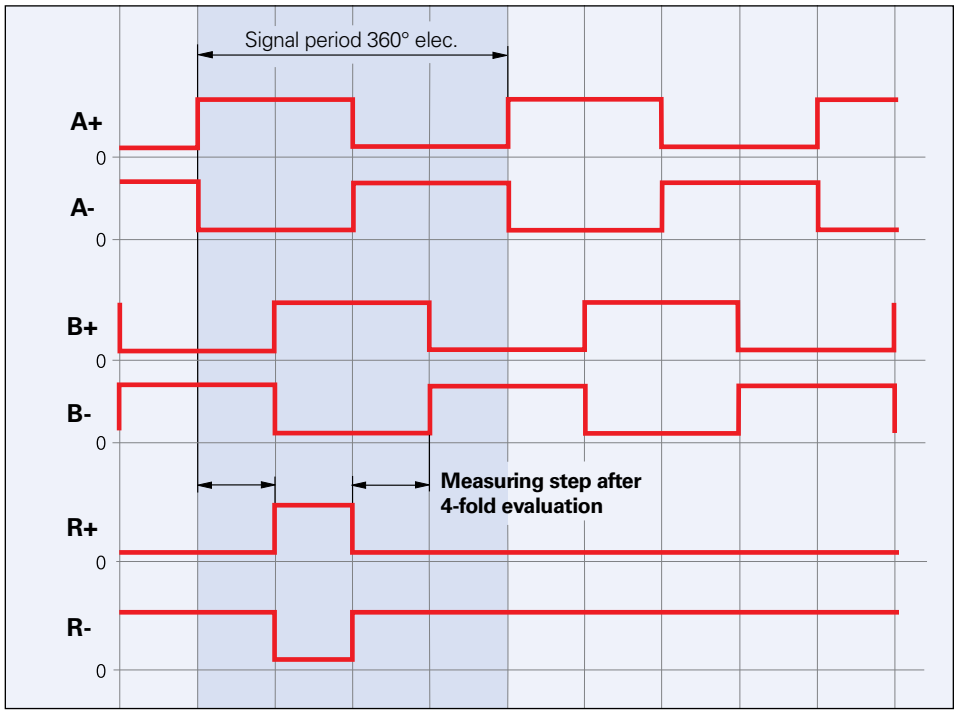

Electrical connection

General electrical information

Transmission of measuring signals—electrical noise immunity
Noise voltages arise mainly through capacitive or inductive transfer. Electrical noise can be introduced into the system over signal lines and input or output terminals.
Possible sources of noise include:
- Strong magnetic fields from transformers and electric motors
- Relays, contactors and solenoid valves
- High-frequency equipment, pulse devices, and stray magnetic fields from switch-mode power supplies
- AC power lines and supply lines to the above devices

Protection against electrical noise
The following measures must be taken to ensure disturbance-free operation:
- Use only original ACU-RITE cables. Consider the voltage drop on supply lines
- Use connecting elements (such as connectors or terminal boxes) with metal housings. Only the signals and power supply of the connected encoder may be routed through these elements. Deviating applications with additional signals in the connecting element require specific measures with regard to electrical safety and EMC.
- Connect the housings of the encoder, connecting elements and subsequent electronics through the shield of the cable. Connect the shield over a large area and in all directions (360°). For encoders with more than one electrical connection, refer to the documentation for the respective product.
- For cables with multiple shields, the inner shields must be routed separately from the outer shield. Connect the inner shield to 0 V of the subsequent electronics. Do not connect the inner shields with the outer shield, neither in the encoder nor in the cable.
- Connect the shield to protective ground as per the mounting instructions.
- Prevent contact of the shield (e.g. connector housing) with other metal surfaces. Pay attention to this when installing cables.
- Do not install signal cable in the direct vicinity of interference sources (inductive consumers such as contactors, motors, frequency inverters, solenoid valves, etc.)
  – Sufficient decoupling from interference-signal-conducting cables can usually be achieved by an air clearance of 100 mm or, when cables are in metal ducts, by a grounded partition.
  – A minimum spacing of 200 mm to inductors in switch-mode power supplies is required.
- If compensating currents are to be expected within the overall system, a separate equipotential bonding conductor must be provided. The shielding does not have the function of an equipotential bonding conductor.
- Provide power only from PELV systems **(EN 50178)** to the position encoders. Provide high-frequency grounding with low impedance **(EN 60204-1 Chap. EMV)**.
- HEIDENHAIN encoders fulfill the requirements of the IEC 61010-1 standard only if power is supplied from a secondary circuit with current limitation as per Section 9.4 of IEC 61010-1$^{3rd\ ed.}$ or with power limitation as per Section 2.5 of IEC 60950-1$^{2nd\ ed.}$, or from a Class 2 secondary circuit as specified in UL1310.

In place of Section 9.4 of IEC 61010-1$^{3rd\ ed.}$, the corresponding sections in the standards DIN EN 61010-1, EN 61010-1, UL 61010-1, and CAN/CSA-C22.2 No. 61010-1 can be used. And in place of Section 2.5 of IEC 60950-1$^{2nd\ ed.}$, the corresponding sections from DIN EN 60950-1, EN 60950-1, UL 60950-1, and CAN/CSA-C22.2 No. 60950-1 can be used.

Electrical connection

Cables for digital readouts

Extension cables for SENC
ACU-RITE linear encoders feature cables with D-sub connector for direct connection to ACU-RITE digital readouts.

The exact lengths of the cable, attached to the reader head can be found in the specifications. If the cable length is insufficient, extension cables are offered complete with connectors to plug directly into the ACU-RITE digital readouts.

Upon request, you can also order adapter cables for connection to discontinued ACU-RITE products.

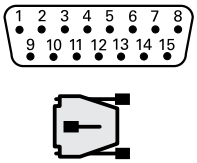

KT 130 edge finder and IOB 610 or IB 2X (only DRO300)

A 15-pin D-sub connection is provided for connecting the KT 130 and the IOB 610.

The trigger signal from the edge finder can also start **data output** (adjustable by parameter).

X10

On the IB 2X and IOB 610

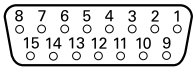

1	2	3	4	5	6	7	8
0 V	/	Signal low	/	/	DC 5 V	0 V	0 V
9	**10**	**11**	**12**	**13**	**14**	**15**	
Signal high	/	/	Value Output Contact	/	Value Output Pulse	0 V	

Vacant pins or wires must not be used.

USB

The digital readouts have a USB interface with a Type C port.

Extension cables for SENC		Length	In metal armor	Without metal armor
Complete with D-sub connector (female) and D-sub connector (male)		1.5 m 3.0 m 4.5 m 6.0 m 7.5 m	683276-05 683276-10 683276-15 683276-20 683276-25	683277-05 683277-10 683277-15 683277-20 683277-25

Pin-out for SENC

9-pin D-sub connector
On linear encoder
or mating connector
to digital readout

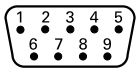

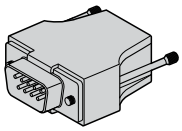

	Voltage supply		Incremental signals						
PIN	**7**	**6**	**2**	**3**	**4**	**5**	**9**	**8**	**1**
Signal	**DC 5V**	**GND**	**A+**	**A–**	**B+**	**B–**	**R+**	**R-**	**/**
SENC 50	Black	White	Green	Yellow	Pink	Red	Brown	Gray	/
SENC 150	Brown	White	Green	Yellow	Blue	Red	Gray	Pink	/

Cable shield on housing; $\mathbf{U_P}$ = Voltage supply
Unused pins or wires must not be assigned!
Color assignment applies only to cable.

Notes

HEIDENHAIN

HEIDENHAIN CORPORATION
333 E. State Parkway
Schaumburg, IL 60173-5337
847-490-1191
FAX 847-490-3931
info@heidenhain.com

www.heidenhain.us
www.acu-rite.com

US **HEIDENHAIN CORPORATION**
226 Airport Parkway, Suite 620
San Jose, CA 95110 USA

HEIDENHAIN CORPORATION
46759 Fremont Blvd.
Fremont, CA 94538 USA

HEIDENHAIN CORPORATION
15375 Barranca Pkwy, Unit E-102
Irvine, CA 92618 USA

HEIDENHAIN CORPORATION
8198 South Jog Rd, Suite 204
Boynton Beach, FL 33472 USA

HEIDENHAIN CORPORATION
136A Harvey Rd, Suite #1
Londonderry, NH 03053 USA

HEIDENHAIN CORPORATION
1274 Hunt Rd.
Ashville, NY 14701 USA

HEIDENHAIN CORPORATION
2717 Commercial Center Blvd.
Suite E200
Katy, TX 77494 USA

HEIDENHAIN CORPORATION
724 Columbia St. NW, #203
Olympia, WA 98501 USA

CA **HEIDENHAIN CORPORATION**
11-335 Admiral Blvd
Mississauga, ON L5T 2N2
Canada

HEIDENHAIN CORPORATION
1545 L'Avenir boulevard, suite 202.1
Laval, Quebec H7S 2N5
Canada

MX **HEIDENHAIN CORPORATION**
Carolina Villanueva De Garcia No. 206
CD. Industrial
Aguascalientes, AGS. CP 20290
Mexico

CH **HEIDENHAIN (SCHWEIZ) AG**
Vieristraße 14
8603 Schwerzenbach
Switzerland
www.heidenhain.ch

FR **HEIDENHAIN France**
2 Avenue de la Cristallerie
F-92310 Sèvres
France
www.heidenhain.fr

GB **HEIDENHAIN (G.B.) Limited**
200 London Road, Burgess Hill
West Sussex RH15 9RD
United Kingdom
www.heidenhain.co.uk

732646-27 | 07/2019 | Printed in the USA

Automation and Metrology International, LLC
1-888-354-2525
auto-met.com