Magnescale
SPEED X PRECISION

LH71/72

Tool offset function Operation manual

LH72

OPERATION FLOW

START → STEP 1 → STEP 2 → STEP 3 → Finished

Change tool master number | **Tool master coordinate settings** | **Setting the number and offset value**

Table of contents

Contents			Page
1. First of all			1
2. Target model			2
3. Front panel			2
4. Positional relationship between TOOL master (reference) and other TOOLs (conceptual diagram)			2
5. Settings and operations	STEP 1	Change tool master number	3
	STEP 2-1	Tool master coordinate setting (for scale with reference point)	3
	STEP 2-2	Tool master coordinate setting (for scale with reference point)	4
	STEP 3	Setting the number and offset value of the tool to be used	5

1. First of all

The tool offset function is used in absolute mode (ABS). You must set up a tool master to use this function. The coordinate position of each tool is a coordinate value managed by the offset amount with respect to the tool master. Therefore, if you change the value of the tool master, the coordinates of other tools will change automatically.

The tool master is set to number 1 in the factory settings, but in this operation manual, the tool master is set to a tool number that is not normally used. Then, in the actual operation, we will explain how to set and operate only the tools that are normally used without using the tool master.

NOTE: Set the X-axis display setting to diameter display (Φ lamp lights up).

AMI
Automation and Metrology International, LLC
8808 Tyler Blvd, Mentor, OH 44060
1-888-354-2525 | sales@auto-met.com
Request a quote: auto-met.com

2. Target model

Item	Model name	Remarks
Display unit	LH72-3（3 axes input）	For Lathe ・ Tool offset: Up to 99 points
	LH71-3 (3 axes input)	When using with lathe settings in basic settings ・ Tool offset: Up to 99 points
Measuring unit	GB-ER	Built-in reference point
	SJ700A	Built-in reference point
	SL110, SL130, PL20C	No reference point

3. Front panel

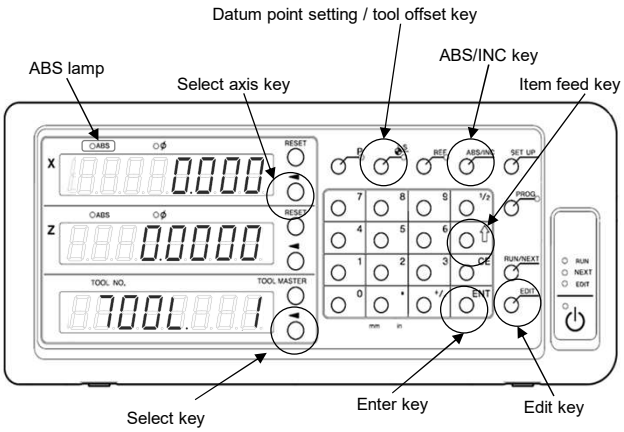

LH72-3

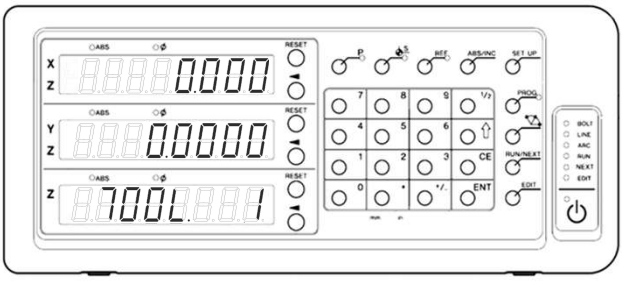

LH71-3

4. Positional relationship between TOOL master (reference) and other TOOLs (conceptual diagram)

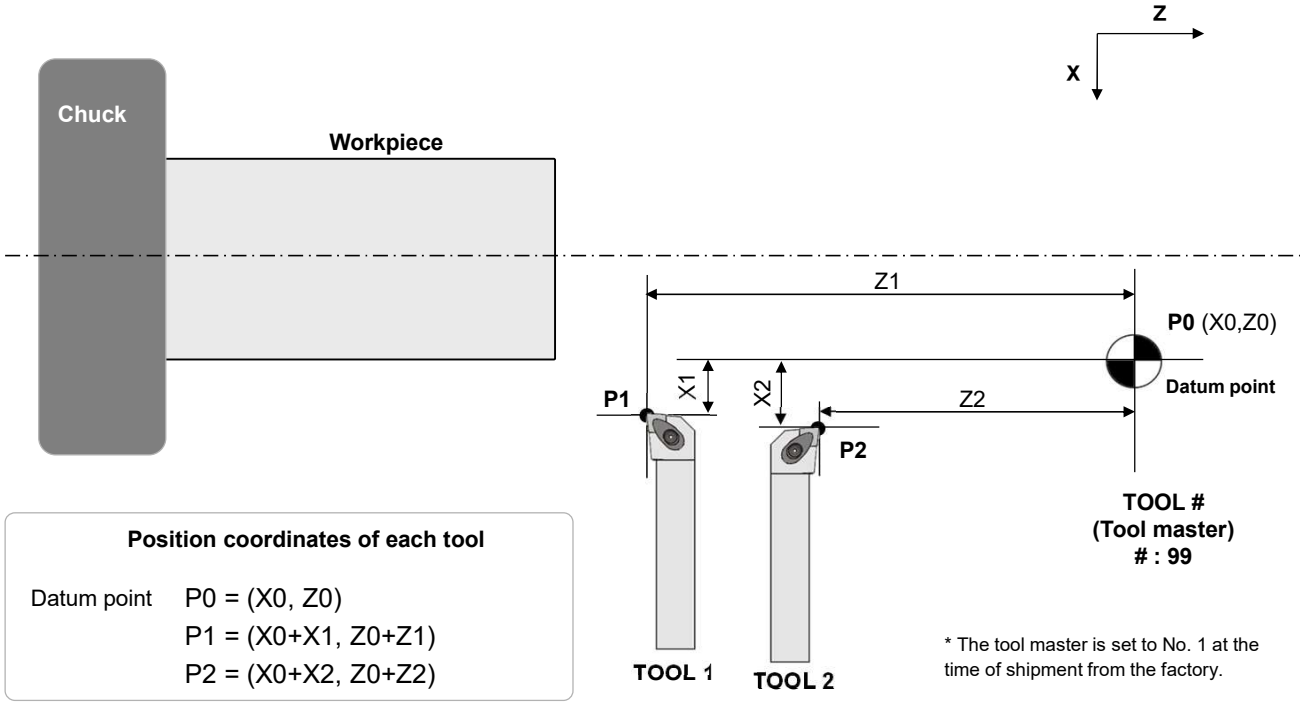

Position coordinates of each tool

Datum point P0 = (X0, Z0)
P1 = (X0+X1, Z0+Z1)
P2 = (X0+X2, Z0+Z2)

5. Settings and operations

STEP 1

Change tool master number:

The tool master is set to number 1 when shipped from the factory, but change this to a number that is not normally used. Since a general lathe uses about 8 tools at a time, change the tool master to 99.

Turn on the power of the display unit, you do not have to attach the tool.

Tool offset for LH71A-3 and LH72-2: up to 99 points

1	2	3	4	5	6	7	8	9	10
11	12	-	-	-	-	-	-	-	-
-	-	-	-	-	-	-	-	-	-
-	-	-	-	-	-	-	98	99	

Press the tool offset key to enter tool offset mode.

Press [S] key. ([S] lamp lighting)

Press [◄] key on the lower TOOL display, enter the number (99) with the numeric keypad,

and press [ENT] key.

Then press [TOOL MASTER] key ([RESET] key for LH71).

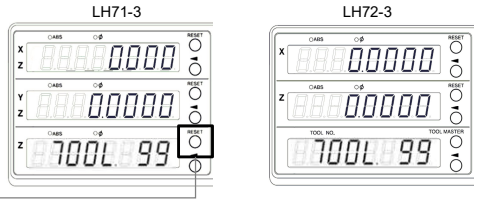

Select the tool master as # 99

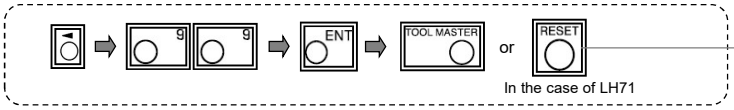

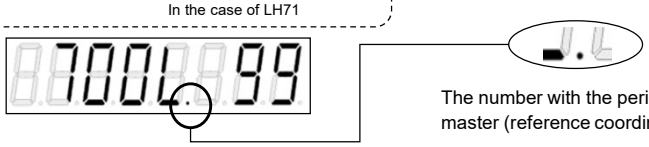

The number with the period "." here is the tool master (reference coordinates).

STEP 2-1

Tool master coordinate setting (for scale with reference point):

If you are using a measuring unit with a reference point, load the reference point once and set the reference point position to the reference value (X, Z = 0,0). By performing this operation, the tool coordinates can be reproduced by detecting the reference point position at the start of work.

When using the 2-axis addition function on the Z-axis, do not load the origin, but move the tool post to the center of the machine movable range to set the Z-axis reference value. **(See step 2-2)**

* For a measuring unit without reference point function, proceed to **step 2-2**.

1. With the tool master as # 99, load the reference point on the X and Z axes and set the reference point position to be the datum point.

Press [REF] key (Reference). ([REF] lamp lights up)

At this time, the tool number display in the lower row automatically switches to the tool master number.

Press the X-axis [◄] key, then [S] key, and [ENT] key.

The display shows the value when the reference point is loaded.

If the displayed value is not [0.0000] , press [◄] key.

Then press the numeric key [0] [.] [0] (0.0)

and change the display to 0.0000 with [ENT] key.

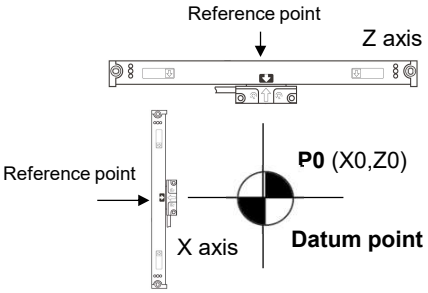

P0 is in absolute mode

(X=0.0000 Z=0.0000)

Move the measuring unit to pass the reference point.
When the reference point is detected, counting starts, and the X-axis reference point loading is completed.

2. Perform the same operation for the Z axis so that the reference point position is the datum point (0.000).

Press the Z-axis [◄] key and press [S] [ENT] key in that order. The display shows the value when the reference point is loaded.

If the display value is not [0.0000] , press [◄] key and then use the numeric and [ENT] keys to change the display to 0.0000.

(Continued on the next page)

Move the measuring unit to pass the reference point.
This completes the setting of the X-axis and Z-axis datum point for the tool master #99.

NOTE: When the 2-axis addition function is used on the Z-axis, the reference point detection is enabled on both the Z1 and Z2 axes on the display unit side. Therefore, if the position of either measuring unit shifts, the reference position will shift.

STEP 2-2

Tool master coordinate setting (for scale with reference point):

Set any position within the effective scale length range as the datum point (X, Z = 0,0). This operation method describes the operation to set the center of the machine movable range as the datum point.

1. The tool master is # 99 and moves the cutting tool holder so that it is approximately in the center of the range of motion on the X and Z axes.

Enter the reference value directly on the X-axis and Z-axis.

Press the X-axis key, enter the numerical value 0.0, and press ENT key.

Set the X-axis datum value to zero (0)

X axis → 0 . 0 → ENT → 0.0000

The X-axis datum point value is now saved in memory in the tool master # 99.

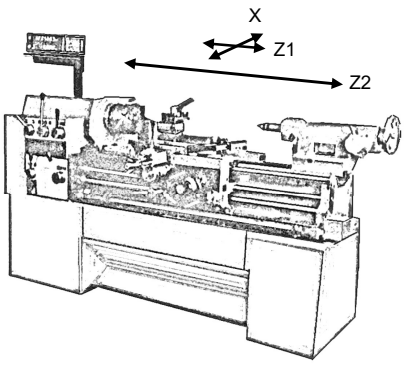

Move the tool post to the center of the movable range of the X-axis and Z-axis

2. Set the Z-axis datum value .

Press the Z-axis key and enter the number(0.0). And press ENT key

Set the Z-axis datum value to zero (0)

Z axis → 0 . 0 → ENT → 0.0000

This completes the setting of the X-axis and Z-axis datum point for the tool master #99.

STEP 3

Setting the number and offset value of the tool to be used:

Set the cutting tool to be actually used on the cutting tool holder, perform machining, measure the dimensions of the workpiece, and enter the value.

Up to **step 2**, you have performed the operations related to the tool master settings. In step 3, set the tool to be actually used.
The procedure is as follows.

① **Set the number of the tool (byte) to be used**

② **Machine the workpiece with the tool and enter its dimensions on the X and Z axes**

When setting another tool, set the tool number in the same way (switch tool number), execute machining, measure the workpiece, and set its value.

1. Attach the bite to the tool post. (Fig.1).

Enter the tool number of this byte (here, number 1) to switch the display.

Make sure lamp is lit.

If the lamp is not lit, press key to enter tool offset mode.

Set the tool number to #1.

Operate the key, numeric key, and ENT key on the lower display to enter "1".

(Lower) → 1 → ENT → TOOL.1

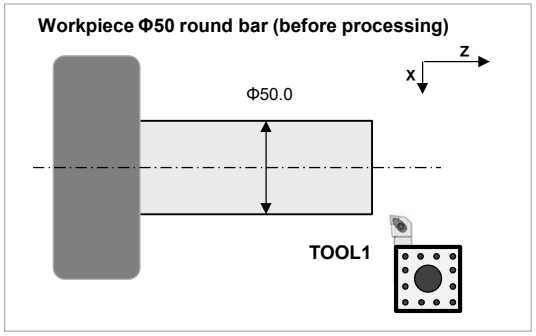

Fig.1

(Continued on the next page)

2. Make a reference plane on the right edge of the workpiece. Cut the right end face with a cutting tool by an appropriate amount.(Fig. 2)
After cutting to the extent that the center is left a little, leave the Z axis as it is without moving it.

3. This surface is used as the reference surface of the workpiece. Set the Z axis to “0.0” without moving the Z axis.

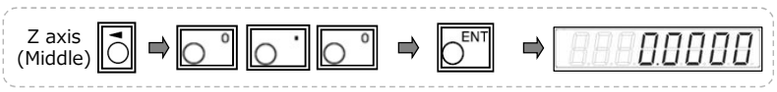

This completes the Z-axis reference (offset value).

4. Next, set the X-axis reference (offset value).
The workpiece is cut and fed in the X-axis direction (Fig. 3).

5. The diameter of the workpiece in the cut part is measured without moving the X axis. (Fig. 4)
Enter the measured value on the X-axis.

For example, if the diameter of the cut part is 40 mm, operate as follows.

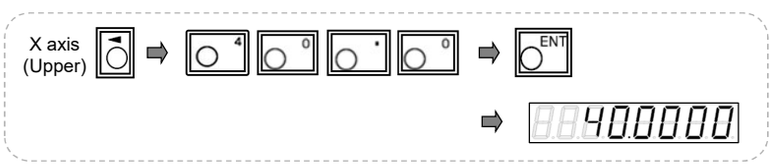

This completes the tool offset for tool # 1.

When the turret, bite, etc. become obstacles and the diameter cannot be measured:
You can move the axis freely by holding the displayed value. After moving the axis to a position where it can be measured, measure the workpiece and enter the measured value.

Example of hold operation for X-axis display

Press the X-axis key and press key.

Workpiece reference surface processing (right end surface Z axis)

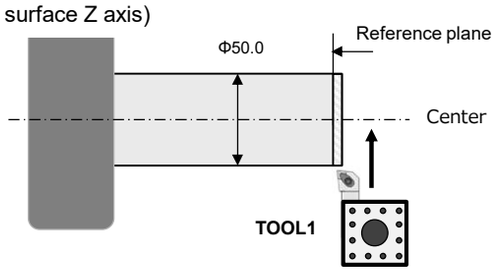

Fig.2

Workpiece reference surface processing (diameter X-axis)

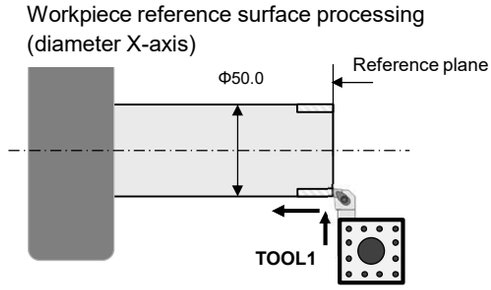

Fig.3

Measurement of workpiece machining dimensions (diameter)

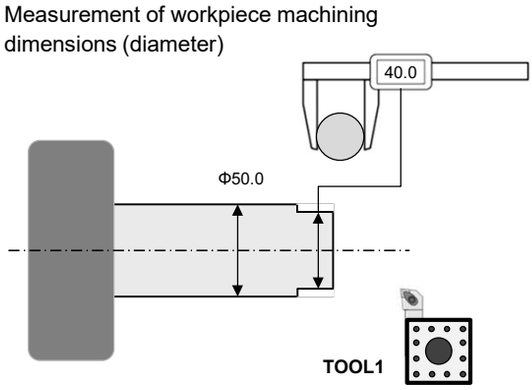

Fig.4

When entering a different tool offset

If you want to enter a different tool offset, change the tool number and repeat steps 1-5 in step 3.

When the tip of the cutting tool is worn, the offset value is deviated, or the sharpness is getting worse

If the tip of the cutting tool is worn, the machining dimensions are misaligned, or the sharpness is getting worse, replace the cutting edge of the cutting tool or polish the cutting edge, and then perform **steps 1 to 5 in step 3** to reset the value.

Automation and Metrology International, LLC
1-888-354-2525
auto-met.com