Magnescale®

Counter Unit

LY71

Read all the instructions in the manual carefully before use and strictly follow them.
Keep the manual for future references.

Instruction Manual (Installation Manual)

Automation and Metrology International, LLC
8808 Tyler Blvd, Mentor, OH 44060
1-888-354-2525 | sales@auto-met.com
Request a quote: auto-met.com

[For U.S.A. and Canada]

THIS CLASS A DIGITAL DEVICE COMPLIES WITH PART15 OF THE FCC RULES AND THE CANADIAN ICES-003. OPERATION IS SUBJECT TO THE FOLLOWING TWO CONDITIONS.

(1) THIS DEVICE MAY NOT CAUSE HARMFUL INTERFERENCE, AND
(2) THIS DEVICE MUST ACCEPT ANY INTERFERENCE RECEIVED, INCLUDING INTERFERENCE THAT MAY CAUSE UNDERSIGNED OPERATION.

CET APPAREIL NUMÉRIQUE DE LA CLASSE A EST CONFORME À LA NORME NMB-003 DU CANADA.

[For the customers in Australia]

Australian EMC Notice

This product complies with the following Australian EMC standards.

AS/NZS 4252.1 /94 EMC Generic Immunity Part1
AS/NZS 2064 /92 Emission Standard for ISM Equipment

Safety Precautions

Magnescale Co., Ltd. products are designed in full consideration of safety. However, improper handling during operation or installation is dangerous and may lead to fire, electric shock or other accidents resulting in serious injury or death. In addition, these actions may also worsen machine performance.
Therefore, be sure to observe the following safety precautions in order to prevent these types of accidents, and to read these “Safety Precautions” before operating, installing, maintaining, inspecting, repairing or otherwise working on this unit.

Warning indication meanings

The following indications are used throughout this manual, and their contents should be understood before reading the text.

⚠ Warning

Failure to observe these precautions may lead to fire, electric shock or other accidents resulting in serious injury or death.

⚠ Caution

Failure to observe these precautions may lead to electric shock or other accidents resulting in injury or damage to surrounding objects.

Symbols requiring attention

CAUTION

FIRE

ELECTRICAL SHOCK

Symbols prohibiting actions

DO NOT DISASSEMBLE

Symbols specifying actions

UNPLUG-GING

⚠ Warning

Do not use with other than the specified power voltage.
Do not use the counter unit with other than the indicated power voltage, and do not connect multiple plugs to a single output.

Do not place a load on the power cord.
Do not damage, modify, excessively bend, pull on, place heavy objects on, or heat the power cord, as this may damage the power cord. Be sure to grip the power plug when unplugging it from the socket.

Be sure to connect the ground.
The power cord includes a safety ground, so be sure to connect this ground. Failure to properly connect the ground may lead to fire or electric shock.

→ **Failure to observe these precautions may result in fire or electric shock.**

Do not expose to inflammable gases.
The counter unit does not have an explosion-proof structure. Therefore, do not use the unit in an atmosphere charged with inflammable gases

→ **Failure to observe this precaution may result in fire.**

Do not handle the plug with wet hands.
Do not plug in, unplug or otherwise handle the power plug with wet hands.

→ **Failure to observe this precaution may result in electric shock.**

Do not disassemble.
Do not open the cover of the counter unit to disassemble or modify the unit.

→ **Failure to observe this precaution may result in burns or injury.**

⚠ Caution

Do not leave the power plug plugged in when not used.
When the unit will not be used for an extended period of time, be sure to unplug the power plug from the socket for safety.

Do not connect or disconnect the connectors with the power on.
Be sure to turn off the power before connecting or disconnecting power and signal connectors in order to prevent damage or misoperation.

Do not use in moving areas or areas exposed to strong shocks.
The unit does not have an earthquake-proof structure. Therefore, do not use the unit in moving areas or areas exposed to strong shocks.

Do not use the power cords for other products.
Do not use the power cord included in optional AC adaptor package for any other product.

→ **Failure to observe this precaution may result in electric shock.**

General precautions

When using Magnescale Co., Ltd. products, observe the following general precautions along with those given specifically in this manual to ensure proper use of the products.

- Before and during operations, be sure to check that our products function properly.
- Provide adequate safety measures to prevent damage in case our products should develop a malfunction.
- Use outside indicated specifications or purposes and modification of our products will void any warranty of the functions and performance as specified for our products.
- When using our products in combination with other equipment, the functions and performance as noted in this manual may not be attained, depending upon the operating environmental conditions. Make a thorough study of the compatibility in advance.

Contents

1. Before Use 1-1

1-1. Item List 1-1

1-2. Features 1-2

1-3. System Configuration 1-3

2. Name and Function of Each Part 2-1

2-1. Front Panel 2-1

2-1-1. When used without the comparator 2-1

2-1-2. When used with the comparator 2-3

2-2. Rear Panel 2-5

3. Installation and Connection 3-1

3-1. Installation 3-1

3-2. Connection 3-2

4. Settings 4-1

4-1. Enabling Operation (When Using the LY71 for the First Time) 4-1

4-2. Making and Changing Basic Settings 4-3

4-2-1. Master calibration 4-5

4-2-2. Input axis 4-5

4-2-3. Destination country 4-5

4-2-4. Measuring unit resolution 4-5

4-3. Advanced Settings 4-6

4-3-1. Display at power ON 4-9

4-3-2. Display resolution and polarity 4-9

4-3-3. Display axis, and display data at power ON 4-9

4-3-4. Scaling 4-10

4-3-5. Linear compensation 4-10

4-3-6. Hold function 4-10

4-3-7. General-purpose input 4-10

4-3-8. General-purpose output 4-13

4-3-9. Key lock 4-14

4-3-10. Current value store 4-15

4-3-11. Flicker control 4-15

4-3-12. Sleep 4-15

5. Specifications 5-1

6. Dimensions 6-1

7. Alarm Display 7-1

8. Troubleshooting 8-1

9. Supplement 9-1

9-1. Setting Flowcharts 9-1

9-2. Key Operations 9-4

1. Before Use

This instruction manual is intended for use outside Japan.

1-1. Item List

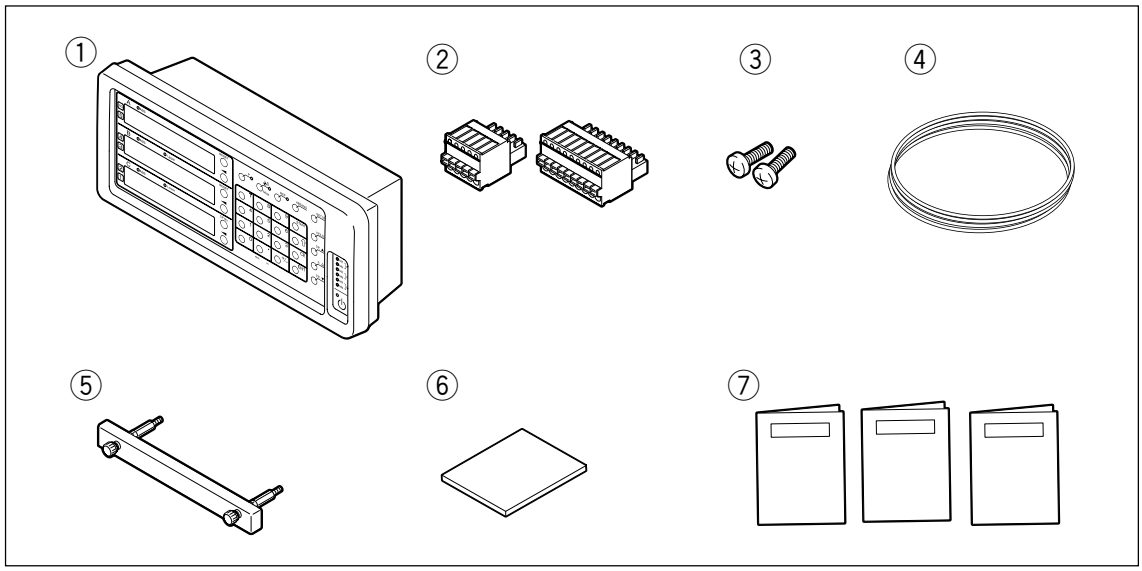

Item	Quantity
① LY71	1
② External I/O terminal block connectors	2
③ Anchor bolts (M4 × 16)	2
④ Ground wire	1
⑤ Handle for removing the expansion unit	1
⑥ CD-ROM (Installation Manual, Operating Manual)	1
⑦ Supplement (LY71, LZ71-B, LZ71-KR)	3

1-2. Features

Peak Hold Function Convenient for Statistical Measurement

It can be set to hold maximum, minimum and peak-to-peak values in counting.

Convenient External Input Functions for Automatic Measurement

In addition to external reset and external preset value call functions, general-purpose inputs are available in the external interface for operations useful for automatic measurement. (The general-purpose inputs can be used as various signal inputs according to the advanced settings.)

BCD Output (Option)

When BCD unit (LZ71-B) is combinedly used, a vatiry of data can be read out via BCD output.
(Current value, maximum value, minimum value, peak-to-peak value)

Comparator Function suitable for in-line measurement applications.

When comparator unit (LZ71-KR) is combinedly used, current values are taken into comparison with comparator setting values and results are output and indicated on the display panel as well. (The comparator output can be either rely or open-collector)
The output signals of comparison results can be used for applications such as part-sorting in in-line measurement and positioning on grinder machines.
The comparator is capable of maximum 16 sets of setting values, each set consisting of 1 to 4 points. Various Switches can be carried out with both front keys and external input interface.

Display Resolution Switching

The display resolution can be selected from the following.
Linear : 0.1 µm to 10 µm
Angles : 1 second to 10 minutes
(Choose the appropriate setting for the connected measuring unit.)

Data Storage

Displayed data and preset data are stored automatically.
Therefore, data can be easily relocated even after the power is turned off or in case of a temporary power failure. (You can select whether to use held values.)

Preset

Each axis can have up to three preset values.
This is useful when setting multiple preset values.

Detecting Reference Point of Measurement Unit

When connected measuring units with build-in reference points, reference points can be detected whenever needed and used as absolute reference points in measurement.

Scaling

The counter can be set to display actual measurement by any multiplier, either scaling-up or scaling-down, within the setting range.
This function is especially helpful in handling contract in materials such as resin and so on when making dies by converting product dimensions to die ones.

Flicker Control

Flicker on the least significant digital caused by connected higher resolution measuring units or vibration from machine tools on which measuring units are installed can be easied by enabling flicker control function.

1-3. System Configuration

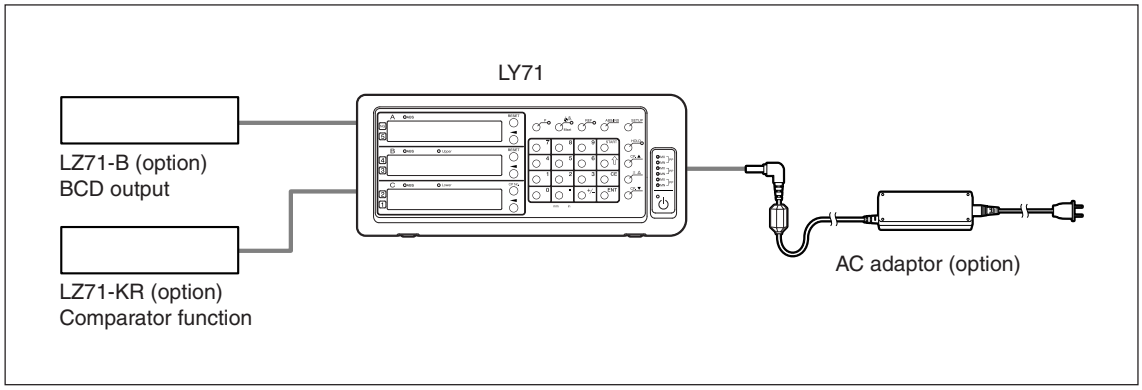

2. Name and Function of Each Part

2-1. Front Panel

Some controls are used only when the comparator unit (LZ71-KR) (option) is connected.
(See “9-2. Key Operations” for a detailed description of the keys.)

2-1-1. When used without the comparator

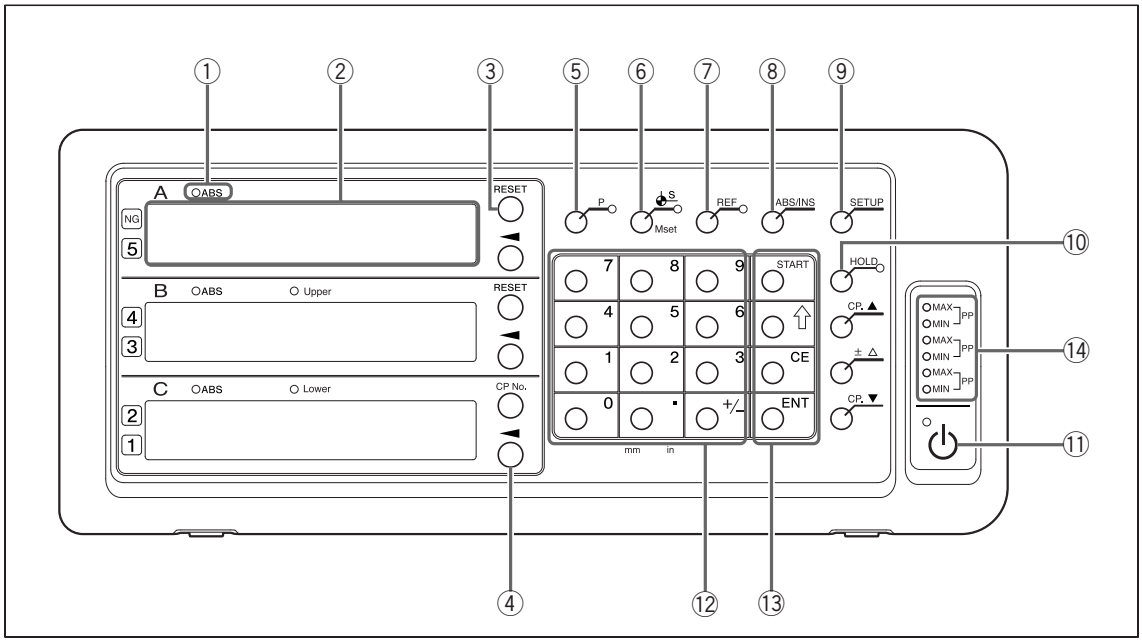

No.	Name	Function
①	ABS lamp	Lights on : When displaying absolute value (ABS) Flashes : When selecting the axis Lights off : When displaying incremental value (INC)
②	Counter display	A/B : Measurement value display (current value, peak value) C : Measurement value display (current value, peak value) However, unlike displays A and B, this is a reference display, so operations to change numerical value contents are not allowed. Shows status with alphabetical letters when making mode settings (See “7. Alarm Display” when an error occurs.)
③	RESET key	Resets incremental value to zero Switches to INC mode when pressed during ABS display.
④	Axis Select key	Selects an axis for the following operations undertaken thereafter are to the axis
⑤	**P** key	Used to perform numerical value setting operations (preset) (lamp lights on when selected)
⑥	S key (Datum Point Value/ Master Calibration Value Setting key)	Used to set the datum point (lamp lights on when selected) Used to set the master calibration value when using the master calibration function
⑦	**REF** key	Used to detect the measuring unit reference point (lamp lights on when selected) Used to relocate the master calibration value when using the master calibration function
⑧	**ABS/INC** key	Switches between ABS mode and INC mode
⑨	**SETUP** key	Used to start to make various settings
⑩	**HOLD** key	Used when using the hold function (latch/pause) (lamp lights on when hold function is selected)

⑪	⏻ key (Standby key)		Turns power ON and OFF Lamp in upper left Lights on: Power OFF Flashing : Startup Lights off: Power ON
⑫	Numeric keys		Performs numerical value input
⑬	Function keys		Used to perform various operations
		START key	Used to start recalculation of peak value
		⇧ key	Advances to next setting item
		CE key	Cancels numerical value input and various function key operations
		ENT key	Validate settings
⑭	Peak Value lamps		MAX lights on : When displaying maximum value MIN lights on : When displaying minimum value Both MAX and MIN light on : When displaying peak-to-peak value

2-1-2. When used with the comparator

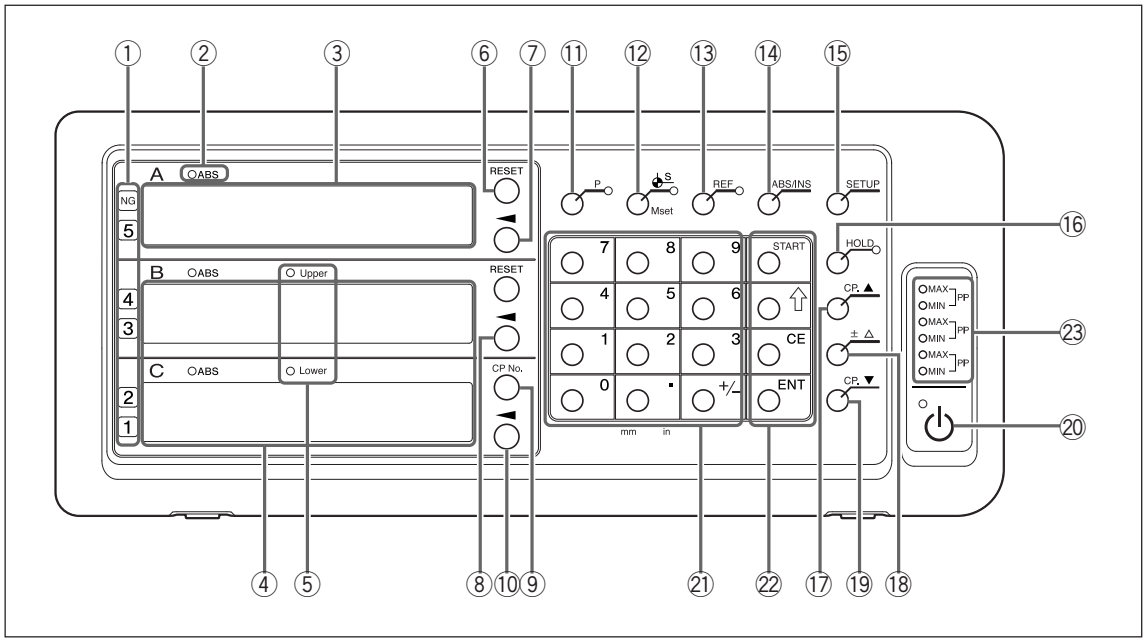

No.	Name	Function
①	Judgment display	Comparator judgment display (When NG, the NG lamp at the top also lights on.)
②	ABS lamp	Lights on : When displaying absolute value (ABS) Flashes : When selecting the axis Lights off : When displaying incremental value (INC)
③	Counter display	A : Measurement value display (current value, peak value)
④	Comparator setting value display	B : Comparator setting value display Upper C : Comparator setting value display Lower
⑤	Upper and Lower lamps	Upper : Lights on when displaying maximum upper limit value, flashes when editing Lower : Lights on when displaying minimum lower limit value, flashes when editing
⑥	RESET key	Resets incremental value to zero Switches to INC mode when pressed during ABS display.
⑦	Axis Select key	Used to perform operations for counter display A
⑧	Upper Limit Value Input key	Used to edit the displayed numerical value
⑨	CP No. key (Comparator Number Switching key)	Used to change the comparator set number
⑩	Lower Limit Value Input key	Used to edit the displayed numerical value
⑪	**P** key	Used to perform numerical value setting operations (preset) (lamp lights on when selected)
⑫	S key (Datum Point Value/ Master Calibration Value Setting key)	Used to set the datum point (lamp lights on when selected) Used to set the master calibration value when using the master calibration function
⑬	**REF** key	Used to detect the measuring unit reference point (lamp lights on when selected) Used to relocate the master calibration value when using the master calibration function
⑭	**ABS/INC** key	Switches between ABS mode and INC mode
⑮	**SETUP** key	Used to start to make various settings

⑯	**HOLD** key		Used when using the hold function (latch/pause) (lamp lights on when hold function is selected)
⑰	**CP.** ▲ key		Switches the comparator setting values (Used when there is a higher comparator setting)
⑱	± △ key		Comparator setting value offset input
⑲	**CP.** ▼ key		Switches the comparator setting values (Used when there is a lower comparator setting)
⑳	⏻ key (Standby key)		Turns power ON and OFF Lamp in upper left Lights on : Power OFF Flashing : Startup Lights off : Power ON
㉑	Numeric keys		Performs numerical value input
㉒	Function keys	**START** key	Used to perform various operations Used to start recalculation of peak value Used to expand available selection options for each setting item
		⇧ key	Advances to next setting item
		CE key	Cancels numerical value input and various function key operations
		ENT key	Validate settings
㉓	Peak Value lamps		MAX lights on : When displaying maximum value MIN lights on : When displaying minimum value Both MAX and MIN light on : When displaying peak-to-peak value

2-2. Rear Panel

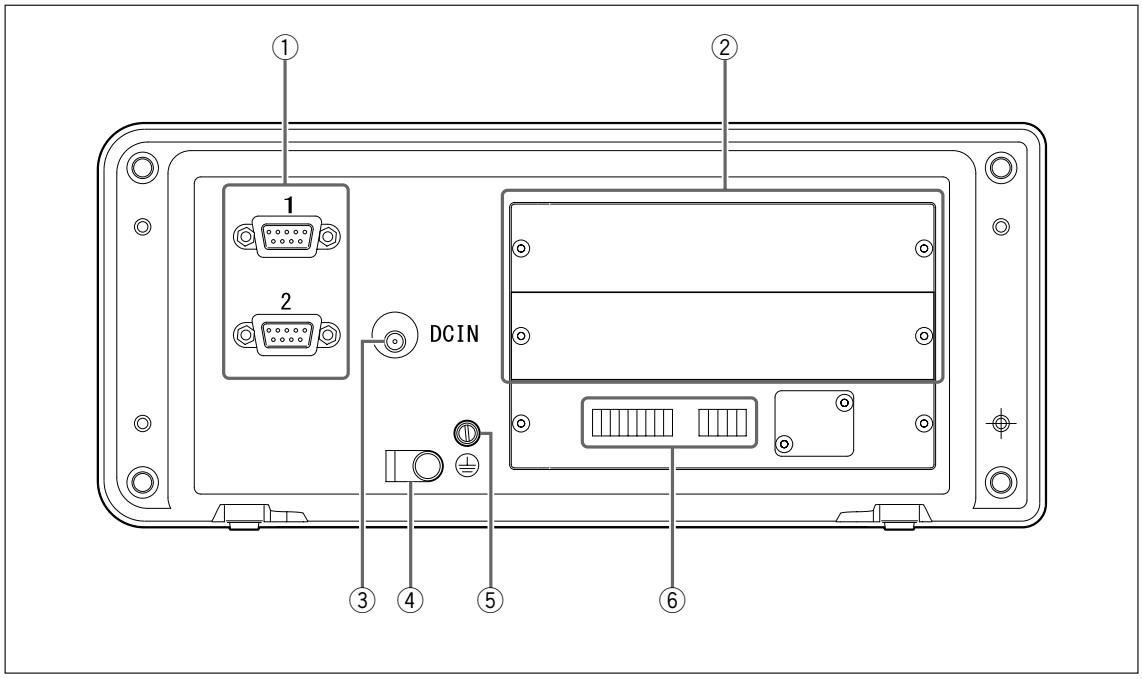

No.	Name	Function
①	**Measuring unit input 1, 2**	Performs measuring unit input for first and second axes
②	**Expansion unit slots**	Used to insert expansion units (LZ71-KR/LZ71-B)
③	**DC input terminal**	DC power input terminal **Note** Always use the specified AC adaptor (option). Using any other adaptor could damage the counter unit or cause it to malfunction.
④	**AC adaptor cable clamp**	Anchors the AC adaptor cable
⑤	**Ground terminal**	**Note** Use the included ground wire when setting up the counter unit, and always connect this terminal to the machine proper that you are setting up.
⑥	**I/O counter unit connector**	Performs various input/output of signals.

3. Installation and Connection

3-1. Installation

Environmental conditions

- Ambient temperature: 0 - 40 °C
- For indoor use (avoid exposure to direct sunlight)
- Install the counter unit so it is protected from coolant, machine oil, chips and the like
- Install the counter unit at least 50 cm from power switchboards, welders, motors and the like

Note

- Do not completely cover the counter unit with a vinyl cover or put it in a sealed case.
- If the counter unit's power is momentarily cut off, or if the voltage temporarily falls below the usable range, the alarm may sound and faulty operation may occur. If such a situation occurs, unplug the AC adaptor, wait a few seconds, reinsert the AC adaptor and repeat the operations from the beginning.

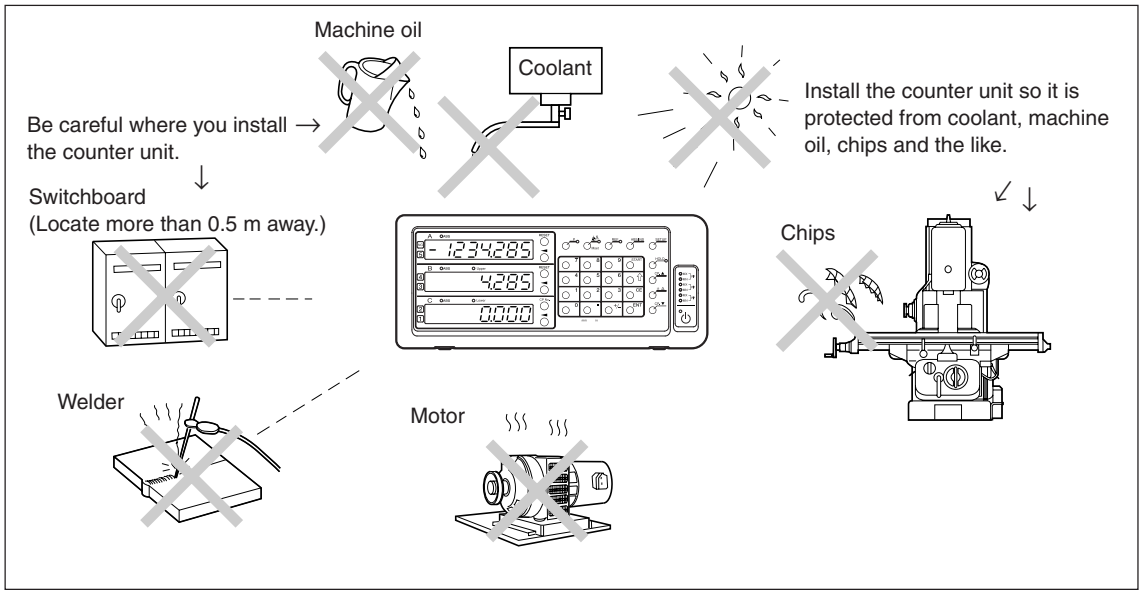

Panel cut-out diagram

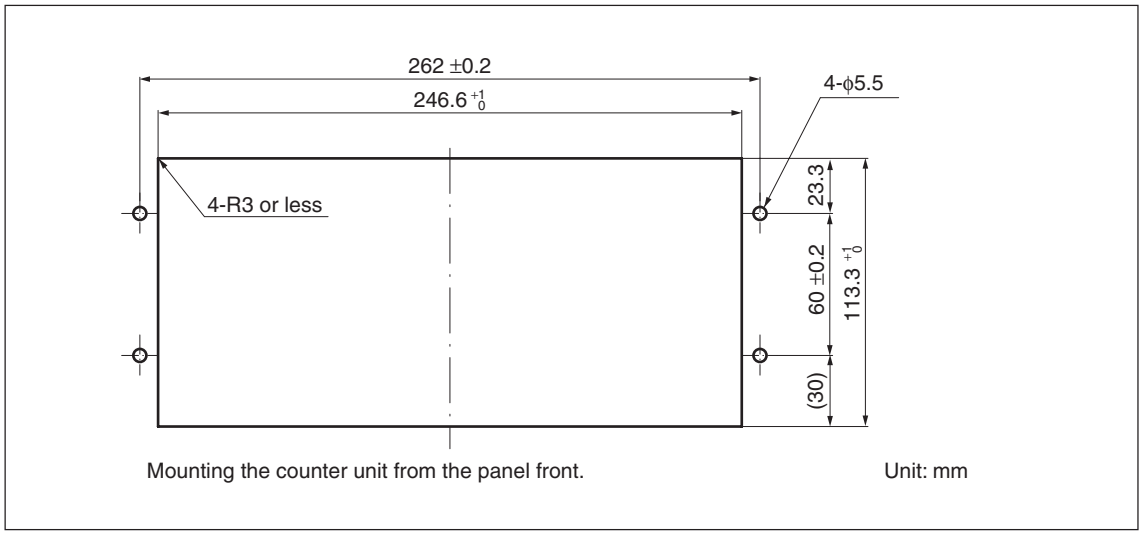

3-2. Connection

Be sure to provide power to the AC adaptor only after all other connections have been made.

Note

- Fasten the connecting cables to stable members to prevent accidental disconnection.
- Be sure to always turn off the AC power to the AC adaptor of the counter unit before connecting or disconnecting the measuring unit connector or replacing the measuring unit. Do not plug in or unplug the DC output connector on the counter unit side.
- Do not route connecting cables through the same duct as the machine power line.
- If securing the counter unit in place, secure it to the installed counter bracket.
  Counter unit anchor bolts (supplied): M4 × 16 (2)

1 Secure the measuring unit.

2 Connect the measuring unit connector to the measuring unit input on the counter unit rear panel.

3 Install the AC adaptor.

Note

Do not provide power to the AC adaptor in this step.

4 Remove the cable clamp on the counter unit rear panel.

5 Connect the DC output connector to the DC input terminal.

6 Attach the DC output connector cable to the cable clamp removed in step 5, and then secure it in place.

Note

Secure the cable so that excessive force is not applied to the connector.

7 Connect the ground wire.

8 Provide power to the AC adaptor.

<When power is turned on for the first time after factory shipping>

When the power is turned on for the first time, the basic settings must be made before use. Proceed to “4. Settings”.

<When the basic settings have already been completed>

LY is displayed on the connected displays (1 to 3).

After providing power, perform the basic settings (4-2) to allow operation.

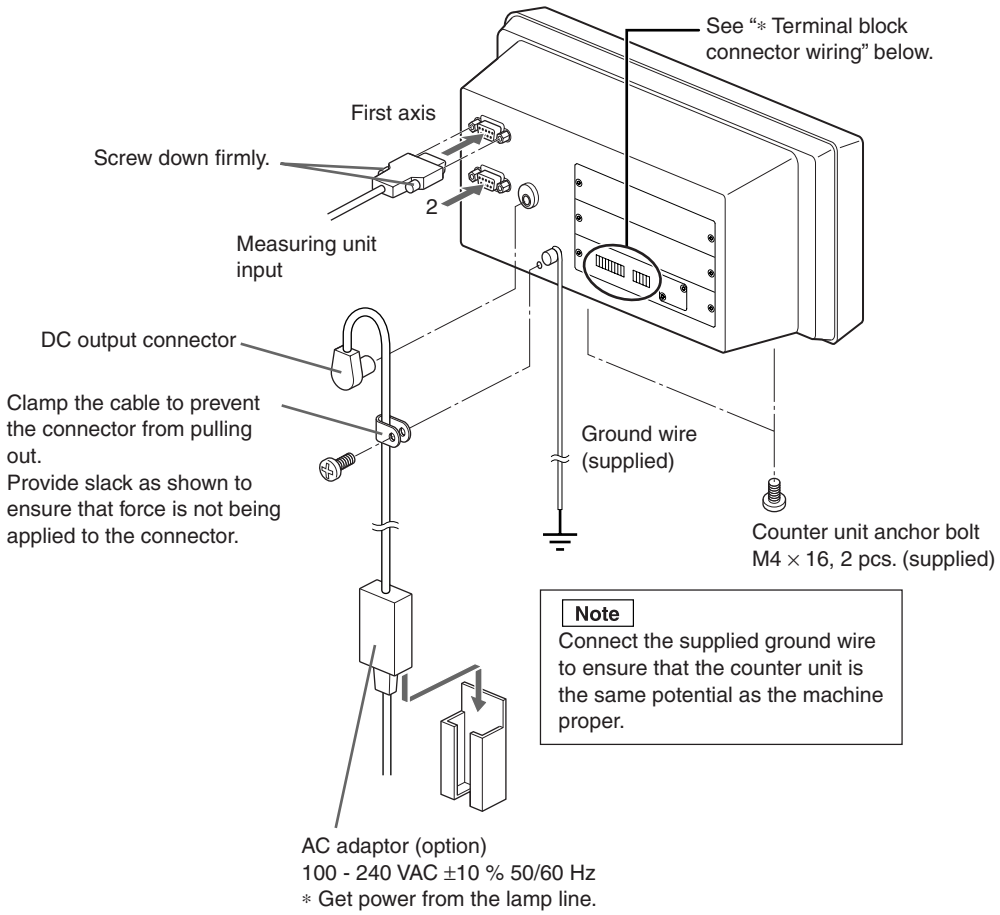

∗ Terminal block connector wiring

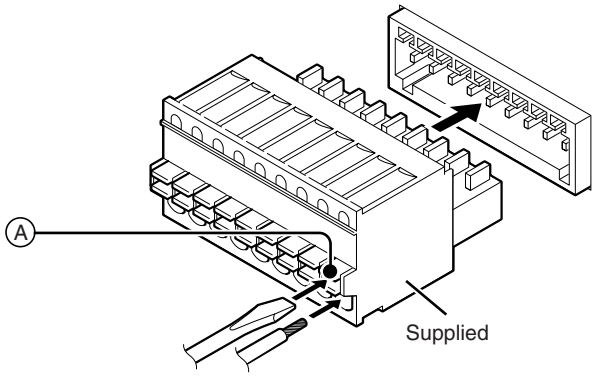

You can use AWG26-20 size wires with this terminal block.
Remove 8 mm of the wire outer sheath, insert the wire all the way into the terminal hole while pressing location Ⓐ above the terminal hole with a flatblade precision screwdriver or other fine instrument, and then remove the screwdriver.

4. Settings

You can use the LY71 after making the basic settings.
The basic settings determine the basic operation of the LY71, so be sure to make the basic settings after displaying the counter.
See “9-1. Setting Flowcharts” for the flow of setting operations.

4-1. Enabling Operation (When Using the LY71 for the First Time)

If you are unsure of the setting method described in “4-2. Making and Changing Basic Settings,” perform the procedure below. This will let you confirm the basic operation.

1 When the power is turned on, the display lights on in the order SETUP → ABSTEr → OFF.

2 Press the ENT key.
..... The display lights on in the order SIG IN → 1 .

3 Press the ENT key.
..... The display lights on in the order COUNTrY → STd.

4 Press the ◄ key.
..... The ABS lamp flashes and settings can be changed.

Operation procedure **(Starting settings)**

If you press the ◄ key when each setting item is displayed, the ABS lamp flashes and you can change the setting item contents.

5 **<When using other than inch units>**
Proceed to step **6**.
<When using inch units>
Press ◄ one time.
The display lights on in the order STd → US.

STD	Standard (mm display; inch display possible)
US	U.S. (inch display; mm display possible)
JPN	Japan (mm display only)

∗ Select the appropriate unit of measurement.

6 Press the ENT key.
..... The setting is validated and the ABS lamp lights off.

Operation procedure **(Finalizing settings)**

If you press the ENT key while the ABS lamp is flashing, the set contents are validated and the ABS lamp lights off.

7 Press the ENT key again.
..... The display lights on in the order SIG rES → 0.5u .

Operation procedure **(To next item)**

If you press the ENT key after finalizing a setting, operation proceeds to the next setting item.

8 **<When using a measuring unit with a resolution of 0.5 μm>**

Press the ENT key.

<When using a measuring unit with a resolution other than 0.5 μm>

(1) Press the ◄ key.

..... The ABS lamp flashes and the setting can be changed.

(2) Each time you press the ◄ key, the displayed setting contents (resolution) change. Press the ◄ key to display the resolution for the measuring unit to be used.

..... 0.5u → 0.1u → 00.10.00 (angle 10 minutes) → 00.01.00 (angle 1 minute) → 00.00.10 (angle 10 seconds) → 00.00.01 (angle 1 second) → 10u → 5u → 1u → 0.5u .... (repeat)

If the necessary resolution is not included in the above, press the START key.

0.5u → 0.1u → 0.05u → 01.00.00 (angle 1 degree) → 00.10.00 (angle 10 minutes) → 00.01.00 (angle 1 minute) → 00.00.10 (angle 10 seconds) → 00.00.01 (angle 1 second) → 100u → 50u → 25u → 20u → 10u → 5u → 2u → 1u → 0.5u .... (repeat)

Referense

Press the START key to increase the selectable options. Press the key again to return to the original options.

Press the ENT key.

..... The settings are validated and the ABS lamp lights off.

Operation procedure **(Function expansion)**

Press the START key to increase the available selection options for setting items that have expanded selection options.

9 Press the ENT key.

..... CANCEL is displayed and the ABS lamp flashes.

10 Press the ◄ key.

..... FINISH is displayed.

11 Press the ENT key.

..... LY is displayed and the ABS lamp lights off.

This completes the basic settings.

After completing the basic settings, refer to “1. Basic Operation” in the Operating Manual and confirm the basic operation method. After confirming the basic operation, proceed to “4-2. Making and Changing Basic Settings.”

4-2. Making and Changing Basic Settings

Be sure to set the items that must be set before operation. If these settings are not made, you will be unable to use the counter unit.
After performing the procedure in "4-1. Enabling Operation," make settings according to the actual application.
See "9-1. Setting Flowcharts" for the flow of setting operations.

To enter the basic setting mode

1 Hold down the SETUP key for 3 seconds or more while LY is displayed.

Basic settings

The basic settings include the items shown in the table on page 4-4. Be sure to set each item.

Operation keys

Setting item selection/ Setting content change	: ◄ key	• When pressed once, the ABS lamp flashes and setting contents can be changed. • When pressed in the change enabled status, the setting contents change.
Setting content finalization/ End item	: ENT key	• Press while the ABS lamp is flashing to validate the setting contents. • Press after finalizing the setting contents to end that setting item and proceed to the next setting item.
Next item	: ⇧ key	• Press to proceed to the next setting item. • Press partway through the setting process to cancel the change contents and proceed to the next setting item.
Expanded selection options	: START key	• Press the START key while the ABS lamp is flashing to increase the available selection options for setting items that have expanded selection options. Press the key again to return to the original options

Setting contents

Display	Setting item	Available options	Remarks
MASTER	Master calibration	OFF (Factory setting) ON	Master calibration function not used. Master calibration function used. ∗ See “2-15. Master Calibration” in the Operating Manual.
SIG IN	Input axis	1 (Factory setting) 1 2 1Add 2 1Add-2 - 1Add 2 - 1Add-2	First axis only used. First and second axes used independently. (Not available when using the comparator) First and second axes used with addition/subtraction.
COUNTRY	Destination country	STD (Factory setting) US JPN	Standard (mm display; inch display possible) U.S. (inch display; mm display possible) Japan (mm display only) ∗ Select the appropriate unit of measurement.
SIG RES	Measuring unit resolution	0.5u (Factory setting) 0.1u : Linear scale 0.1 µm 0.5u : Linear scale 0.5 µm 1 u : Linear scale 1 µm 5 u : Linear scale 5 µm 10 u : Linear scale 10 µm 00.00.01 : Rotary scale 1 s 00.00.10 : Rotary scale 10 s 00.01.00 : Rotary scale 1 min 00.10.00 : Rotary scale 10 min <Expanded selection options are shown below> 0.05u : Linear scale 0.05 µm 2 u : Linear scale 2 µm 20 u : Linear scale 20 µm 25 u : Linear scale 25 µm 50 u : Linear scale 50 µm 100 u : Linear scale 100 µm 01.00.00 : Rotary scale 1 degree	Set to match the measuring unit resolution. 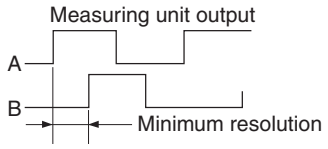 The displays for inputs 1, 2, and 3 of the measuring unit are fixed regardless of the settings for the display axis and display data at power ON (see "4-3. Advanced Settings"). Expanded selection options are made available by pressing the START key.

Completing the basic settings

1 After finalizing the measuring unit resolution setting, press the ENT key.
(Reference: You can complete the basic settings at any time by pressing the SETUP key. In this case only validated setting contents are applied to the settings.)
..... CANCEL is displayed.

Referense

To cancel all setting changes, press the ENT key while CANCEL is displayed.
The settings prior to making the changes are retained.

All clear (factory settings)

When you press the REF key while CANCEL is displayed, the display changes to CLr.
Press the ENT key to clear all the setting contents and return to the factory settings.
Press the CE key to cancel the all clear operation and return to the original display.

Note

When you perform the all clear operation, the advanced setting items also return to the factory settings. Be sure to write down any necessary contents before performing the all clear operation. Cleared contents cannot be restored.

2 Press the ◄ key.
..... FINISH is displayed.

3 Press the ENT key.
..... The settings are validated.

Note

The advanced setting items return to the factory settings after making the basic settings.

4-2-1. Master calibration

When using a gauge-type measuring unit, an operation known as master calibration is sometimes performed when starting operation. The master calibration operation can be simplified if a gauge-type measuring unit with a reference point is used together with the master calibration function of this counter unit.

4-2-2. Input axis

This determines whether to use only one axis or two axes of the measuring unit. When using two axes, this also determines whether to perform addition.
When using the comparator, one axis only addition is selected, and the first and second axes cannot be used independently.

4-2-3. Destination country

This selects the destination country.
STD Standard (mm display; inch display possible)
US U.S. (inch display; mm display possible)
JPN Japan (mm display only)

4-2-4. Measuring unit resolution

Set the resolution of the connected measuring unit.
Counter display A displays the first axis input, and counter display B displays the second axis input. When the resolution of the connected measuring unit cannot be found within the basic resolutions, press the START key to expand the available resolution options.

4-3. Advanced Settings

Make the advanced settings as necessary.
See “9-1. Setting Flowcharts” for the flow of setting operations.

To enter the advanced setting mode

Press the SETUP key during count display.

Operation keys

Setting item selection/ Setting content change	: ◄ key	• When pressed once, the ABS lamp flashes and setting contents can be changed. • When pressed in the change enabled status, the setting contents change. • Numeric key input is possible for items that allow numerical value input.
Setting content finalization/ End item	: ENT key	• Press while the ABS lamp is flashing to validate the setting contents. • Press after finalizing the setting contents to end that setting item and proceed to the next setting item.
Next item	: ⇧ key	• Press to proceed to the next setting item. • Press partway through the setting process to cancel the change contents and proceed to the next setting item.
Numerical value input	: Numeric keys (1 to 9, ·, +/–)	• Press to enter numerical values.
Expanded selection options	: START key	• Press the START key while the ABS lamp is flashing to increase the available selection options for setting items that have expanded selection options. Press the key again to return to the original options.

Setting contents

Display	Setting item	Available options	Remarks
Pon dSP	Display at power ON	COUNT LY (factory setting)	Count display after power ON LY display after power ON (used to detect power supply interruptions)
dSP rES	Display resolution and polarity	(Select polarity with ○+/– key) 0.1u 0.5u 1 u 5 u 10 u 00.00.01 00.00.10 00.01.00 00.10.00 <Expanded selection options are shown below> 0.05u 2 u 20 u 25 u 50 u 100 u 01.00.00	(Supports the selected polarity) 0.1 µm 0.5 µm 1 µm 5 µm 10 µm Angle 1 s Angle 10 s Angle 1 min Angle 10 min 0.05 µm 2 µm 20 µm 25 50 µm 100 µm Angle 1 degree ∗ The initial value is the same as the measuring unit resolution set by the basic settings.
INPUT CHANGE	Display axis, and display data at power ON	1 Cr (Factory setting for display A) 1 MAX (Factory setting for display B) 1 MIN (Factory setting for display C) 1 P-P	Displays the current value of the first axis input Displays the maximum value of the first axis input Displays the minimum value of the first axis input Displays maximum value – minimum value ∗ To turn off the display, set - --. However, you cannot turn off all the counter displays at the same time.
SCALING	Scaling	0.100000 to 9.999999 (Factory setting 1.00000)	Numerically input the magnification.
LIN Err	Linear compensation	0 to ±600 (Factory setting 0) <Expanded selection option> 0 to ±1000	Numerically input the compensation value. (Unit: µm) ∗ Numerical value of measuring unit resolution Example: When the measuring unit resolution is 0.001 mm, the compensation value applies to the three digits below the decimal point, and can be set in the range from –1.000 to 1.000.

Display	Setting item	Available options	Remarks
HOLd Fn	Hold function	LATCH (Factory setting) PAUSE	Latch Pause
INPUT	General-purpose input	HoLd (Factory setting) STArT dSP LOAd	Hold input Restart input Display data switching Reference point load input
OUTPUT	General-purpose output	ALm dSP (Factory setting) ALm rEF ALm r.AL ALm 0-P dSP rEF dSP r.AL dSP 0-P rEF r.AL REF 0-P r.AL 0-P	Output for alarm and display mode Output for alarm and reference point detected signal Output for alarm and reference point alarm Output for alarm and signal when going past zero point Output for display data and reference point detected signal Output for display data and reference point alarm Output for display data and signal when going past zero point Output for reference point detected signal and reference point alarm Output for reference point detected signal and signal when going past zero point Output for reference point alarm and signal when going past zero point
KEYLOCK	Key lock	OFF (Factory setting) ON	Keys unlocked Keys locked
STr	Current value store	OFF (Factory setting) ON	Current value not held Current value held
FLICKEr	Flicker control	OFF 1 2 (Factory setting)	Flicker control OFF Weak Strong
SLEEP	Sleep	OFF (Factory setting) 1 5 10 30 60	Sleep mode OFF After 1 minute After 5 minutes After 10 minutes After 30 minutes After 60 minutes

4-3-1. Display at power ON

This sets the display mode when the power is turned on.
LY display : This setting can be used as an alarm to indicate that power supply was interrupted.
Count display : This setting enables immediate use after the power is turned on. However, when the master calibration function is set, the counter unit waits to go past the reference point.

4-3-2. Display resolution and polarity

The initial value is the same as the measuring unit resolution set by the basic settings. When the measuring unit resolution is changed, the display resolution is also initialized to the same resolution.
Also set the display polarity when setting this item.

4-3-3. Display axis, and display data at power ON

You can set the axis (first axis input, second axis input, addition axis) displayed in each counter display (A/B/C) and the data (current value, maximum value, minimum value, peak-to-peak value (maximum value _ minimum value)) displayed at power ON.

Factory settings

Counter display A: Current value of the first axis input
Counter display B: Maximum value of the first axis input
Counter display C: Minimum value of the first axis input

The contents set here become the display data at power ON.

Setting method

1 Press the ◀ key of the counter display (A/B/C) to be set, and select the axis to be displayed.
→ 1 (First axis) → 2 (Second axis) → Ad (Addition axis)

2 Press the ENT key.

3 Press the ◀ key to select the data displayed at power ON.
→ Cr (Current value) → MAX (Maximum value) → MIN (Minimum value) → P-P (Maximum value - Minimum value)

4 Press the ENT key.

Changing the display data during operation (See "1-6. Switching the Display Data" in the Operating Manual.)

. Display data can be switched during the operation when the display data are from the same input axis. However, input axis whose data are displayed cannot be switched. When the display axis must be switched, make the change with the advanced settings.
. Display data set by the advanced settings is displayed when the power is turned back on.

4-3-4. Scaling

This changes the display dimension magnification. This is mainly used when measuring objects with different reduced scales or when taking die shrinkage into account for cutting.

Example 1. When measuring a 1/2 model as an equal magnification model
By setting 2.000000, the display changes by 2 mm for each 1 mm of movement.

Example 2. When cutting a die for a resin part with a resin molding shrinkage ratio of 0.95%
A large die is cut in consideration of shrinkage, so the die dimension relative to the part dimension is 1/0.95. Therefore, a die can be cut with the part dimensions as is by setting 1.052631.

4-3-5. Linear compensation

Unlike gauge-type measuring units, scale-type measuring units experience dimensional error caused by sagging of the device to which the scale is attached. You can compensate this sagging by measuring the compensation value as outlined in “2-19-2 Linear compensation” of the Operating Manual, and setting that value.

4-3-6. Hold function

The hold function consists of a latch function and a pause function.
Latch : You can hold the display even while the measuring unit is moving. This is used to read the dimension at a particular point without stopping movement during measurement.
Pause : You can pause updating of the peak value calculation even while the measuring unit is moving. Data resulting from movement while paused is not reflected to the peak value calculation.

4-3-7. General-purpose input

You can perform operations by external contact point input instead of key operations.

Possible operations

- Hold
- Restart
- Display data switching
- Relocation of datum points using reference points or relocation of master calibration values using reference points

IN-A	Counter display A	Hold, restart, display data switching, relocation of datum points and master calibration values using reference points
IN-B	Counter display B	
IN-C	Counter display A/B/C	Hold, restart, display data switching
Hold		Function ON at first input; function OFF at second input

To enable use

Check the following circuits, then make the necessary wiring connections and input the signal.

Overview of external contact point inputs

Input circuit for external input signals

- When using external input, connect the signal to the external input terminal for 10 ms or more (common terminal). When inputting an external signal again, ensure an OFF time of 70 ms or more.
- Use a shielded cable for the connecting cable, and connect the shielding to the I/O connector shell. In addition, connect COM separately from the shielding. (The switches and shielded cable should be prepared separately by the customer.)

- **Input circuit for general-purpose input, external reset and external preset value call (preset recall)**

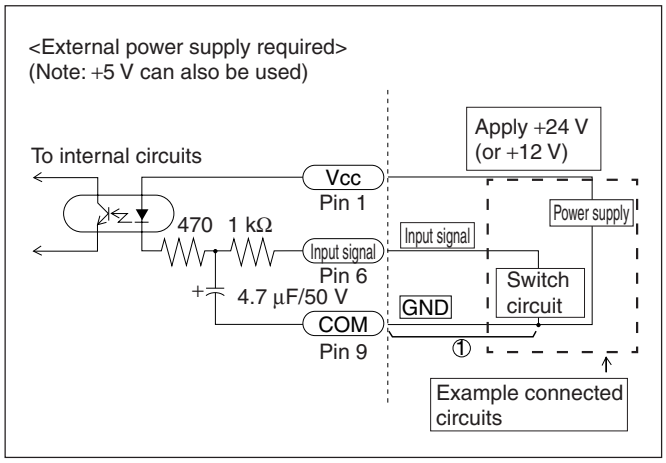

- **Input signal timing**

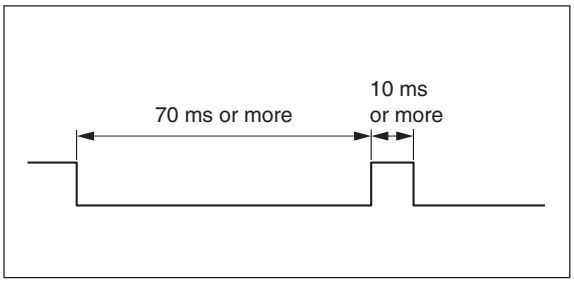

Input circuit delay time

When an input signal is input, the input circuit causes a delay time until that signal is transmitted to the internal circuits. Note that this delay time differs greatly according to the input circuit operating voltage.

(Example) When operated at +24 V, the delay time until the signal is transmitted to the internal circuits is approximately 350 μs.

The process time after the signal is transmitted to the internal circuits until operation is actually performed differs according to the operating conditions. When not using expansion units, this takes at least 5 ms (min.). This time becomes longer when expansion units are connected.

The delay time is greatly reduced by not connecting portion ① in the "Input circuit for general-purpose input, external reset and external preset value call (preset recall)" circuit drawing above. However, in this case noise or other factors can easily cause misoperation. Therefore, be sure to take noise countermeasures when not connecting portion ①.

Referense

When ① is not connected

When using +24 V, the delay time is approximately 3 μs.

Terminal block connector

Interface cable

Use a shielded cable such as that shown in the figure for the interface cable connected to the terminal block connector. Connect the shield to the casing near the terminal block connector. In addition, connect the COM terminal separately from the shield. (This cable should be prepared separately by the customer.)

Cable section

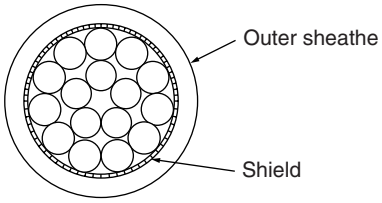

Input signal pin assignment

①	Power supply	Apply 12 - 24 V to the (Vcc) input.
②	External reset A	(Ex. RESET A)
③	External reset B	(Ex. RESET B)
④	External preset recall A	Ex. RCL A
⑤	External preset recall B	Ex. RCL B
⑥	General-purpose input A	Ex. IN A
⑦	General-purpose input B	Ex. IN B
⑧	General-purpose input C	Ex. IN C
⑨	COM	COM

Terminal arrangement

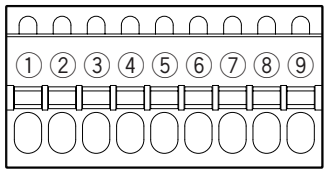

4-3-8. General-purpose output

Counter information can be output from the general-purpose outputs.

• Alarm (ALm)	Output during error display.	High : Alarm Low : Normal
• Display mode (dSP)	Indicates the type of the displayed data.	High : Current value Low : Peak value
• Reference point detected signal (rEF)	Output when going past a reference point during reference point operation. Not output when reference point operation is off, even when going past a reference point.	High : Normal Low : Going past reference point (for 0.2 seconds after going past reference point)
• Reference point alarm (r.AL)	Output when the reference point signal is not connected or when the speed across the reference point is exceeded.	High : Alarm Low : Normal
• Signal when going past zero point (0-P)	Output when the INC display current value goes past the zero point.	High : Normal Low : Going past zero point (for 0.2 seconds after going past zero point)

OUT A1 OUT A2	Output for the data of the axis displayed in counter display A	Alarm, display mode, reference point detected signal
OUT B1 OUT B2	Output for the data of the axis displayed in counter display B	Reference point alarm, signal when going past zero point

Allowed output combinations

<Example: For A1 and A2>

A1 = ALm A1 = ALm A1 = ALm A1 = ALm
A2 = dSP A2 = rEF A2 = r.AL A2 = 0-P

A1 = dSP A1 = dSP A1 = dSP A1 = rEF A1 = rEF
A2 = rEF A2 = r.AL A2 = 0-P A2 = r.AL A2 = 0-P

A1 = r.AL
A2 = 0-P

∗ These combinations are the same for B1 and B2.

To enable use

Check the following circuit, and then make the necessary wiring connections.

Output circuit

- Output circuit
  All output signals are photocoupler outputs (12 V to 24 V 15 mA max.).

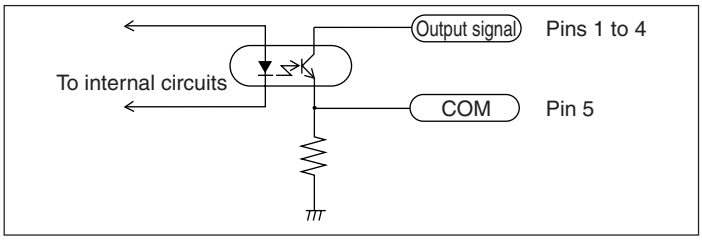

When using the general-purpose output as the reference point output, time until the output signal changes to High is 200 ms after going past the reference point.

①	OUT A1
②	OUT A2
③	OUT B1
④	OUT B2
⑤	COM

Terminal pin assign

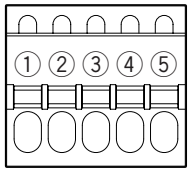

4-3-9. Key lock

This function can be used to prevent unintended setting changes or misoperation after the counter unit is installed. For example, when the user differs from the person who installed the counter unit, the keys can be locked to prevent misoperation in the event the user incorrectly touches the keys.
After making the setting, the only valid key operations are the ⏻ (Standby) key and SETUP key.

Canceling key lock

∗ Once applied, a password must be entered to cancel the key lock.

1 Press SETUP.
..... Password entry is required.

2 Press the numeric keys 1, 7, 9 and 3 in that order.
..... Advanced setting operations are enabled.

3 Set key lock to OFF in the advanced settings.

4-3-10. Current value store

This sets whether to display the previous value when the power is turned on again.

Note

When using the master calibration function, a value is not displayed unless the measuring unit goes past a reference point, and so it will not function even if set to ON.

4-3-11. Flicker control

If the number for the minimum digit of the display value is flickering and unstable, this flickering can be reduced.

Note

Because the flicker control is realized by averaging measured valves, enabling flicker control could possibly affect the display response to some extent.

When using the LZ71-B, updating of the BCD output data may be delayed and the same data may be repeatedly output depending on the acquisition timing. If this occurs, use with the flicker control function set to OFF.

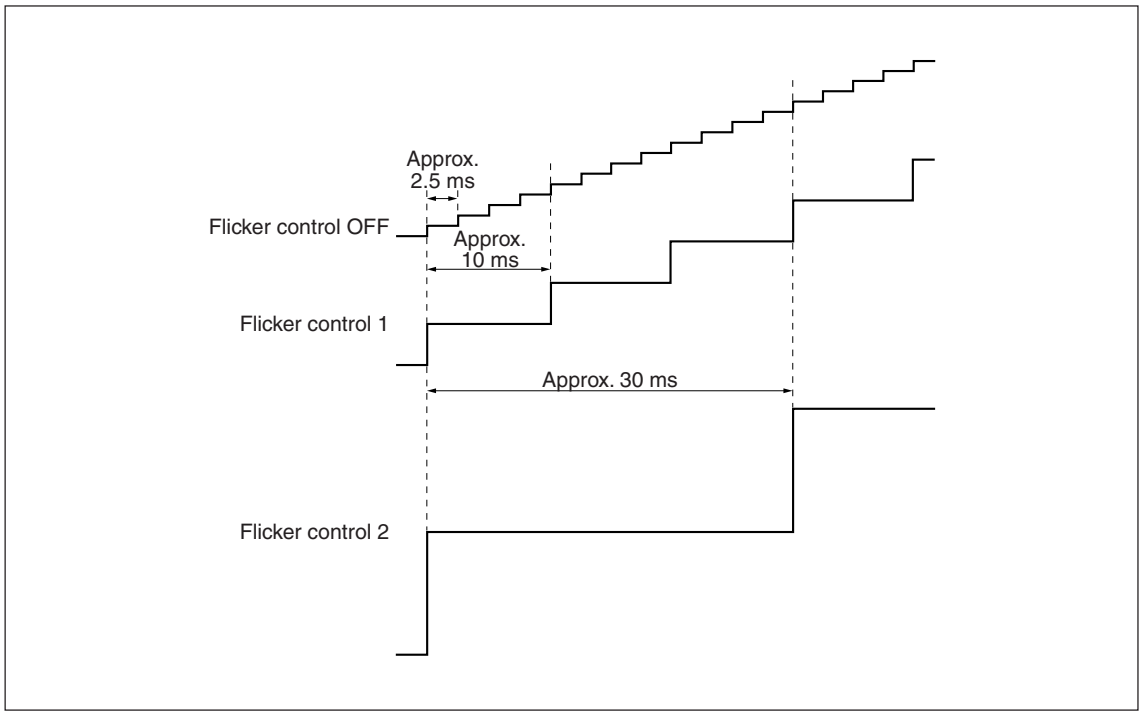

4-3-12. Sleep

The display can be turned off automatically when the measuring unit is not moved and no key operations are performed for a certain period of time while the power is on. The display is restored whenever the measuring unit is moved or any key operation is made. The key operation at this time simply restores the display, and the normal key function is not performed. The display is restored even when the key lock is applied.

5. Specifications

Function				Description
Display				7 digits and minus display, Color amber
Display data	Display data at power ON			It is possible to set the display data for each axis at power ON.
	Display switching			The display data for each axis can be set by key operations.
		Without comparator		The calculation values for each axis can be selected and displayed in the counter displays A, B and C. (Advanced settings and key operations)
			1-axis input	Factory setting: Display A : First axis current value, Display B : First axis maximum value, Display C : First axis minimum value
			2-axis input	Factory setting: Display A : First axis current value, Display B : Second axis current value, Display C : Off (Input axis switching is also possible)
		With comparator		Comparator display : Display A : Data display for axis subject to comparator Display B : Comparator setting value display Upper Display C : Comparator setting value display Lower
Measuring unit input resolution				Standard : 0.1 μm, 0.5 μm, 1 μm, 5 μm, 10 μm, 1 s, 10 s, 1 min, 10 min Expanded : 100 μm, 50 μm, 25 μm, 20 μm, 2 μm, 0.05 μm and 1 degree can be added.
Display resolution				Measuring unit input resolution or higher and supported inch units Inch: Basic : 0.000005", 0.00001", 0.00005", 0.0002", 0.0005" Inch: Expanded: 0.000002", 0.0001", 0.001", 0.002", 0.005"
Input signal				A/B quadrature signal, Z signal (Conforms to EIA-422)
Minimum input phase difference				100 ns
Calculation data	1-axis input			First axis current value, maximum value, minimum value, peak-to-peak value (Current value only when using high-speed BCD)
	2-axis input	Without comparator		Current value, maximum value, minimum value and peak-to-peak value of first axis, second axis and addition axis (Each axis can be calculated individually.)
		With comparator		Current value, maximum value, minimum value and peak-to-peak value of first axis or addition axis (1 + 2) (Calculation can be performed for only one axis.)
Quantization error				±1 count
Alarm display				Measuring unit disconnected, Excess speed, Maximum display amount exceeded, Power failure, Error in stored data
Reset	Key operation and external reset			Current value reset, Alarm cancel
Restart	START key and external input			Restart of peak value calculation for each axis/all axes
Preset	Preset/call by key operations, External recall			It is possible to store/edit up to three values for each axis.
Master calibration function	In combination with a measuring unit with a reference point			The master calibration value is relocated when going past the reference point after the power is turned on.
Datum point operations	Datum point set/call by key operations			It is possible to store/edit one value for each axis (when not using the master calibration function).
Reference point operations	Reference point hold/relocation by key operations			It is possible to store/edit one value for each axis (when not using the master calibration function).
Hold function	Latch input when latch is selected by general-purpose input, and function operated by HOLD key			Selectable from latch and pause Latch : Display held while latched (Display hold) Pause : Peak calculation stopped while paused (Peak calculation hold)

Function		Description
General-purpose input	Input connector	Phoenix Contact terminal block connector, 9 pins (Including external reset and external preset value call (preset recall))
		The function can be selected for inputs 1 to 3. Input 1 : (for axis A) Hold function (latch, pause), Restart, Display mode switching, External reference point load Input 2 : (for axis B) Hold function (latch, pause), Restart, Display mode switching, External reference point load Input 3 : (for all axes) Hold function (latch, pause), Restart, Display mode switching
General-purpose output	Output connector	Phoenix Contact terminal block connector, 5 pins
		The function can be selected for outputs 1 to 4. Outputs 1 and 2 : (for axis A) Alarm, Display mode, Reference point detected signal, Reference point alarm, Signal when going past zero point Outputs 3 and 4 : (for axis B) Alarm, Display mode, Reference point detected signal, Reference point alarm, Signal when going past zero point
Linear compensation		A fixed compensation amount is applied to the measuring unit's count value. Compensation amount Standard: ±600 μm/m (Expanded: ±1000 μm/m)
Scaling		Scaling factor: 0.100000 to 9.999999
Key lock		It is possible to set and cancel the key lock.
Current value store		It is possible to set whether to store the current value at power OFF.
Display at power ON		LY display or count display can be selected.
Flicker control		When the minimum digit of the display value is unstable, the average value is displayed.
Expansion units		BCD, Comparator
Power save		The display is turned off when no operations are made for a preset time. (The time can be set.)
Power supply		DC 12 V Rating 0.75 A Max. 1 A AC 100 V - 240 V ±10 % (When using the AC adaptor (option))
Power consumption		Max. 32 VA (connected to AC power supply)
Operating temperature range		0 to 40 °C (no condensation)
Storage temperature range		–20 to 60 °C (no condensation)
Mass		Approx. 1.5 kg

6. Dimensions

Specifications and appearances of the products are subject to change for improvement without prior notice.

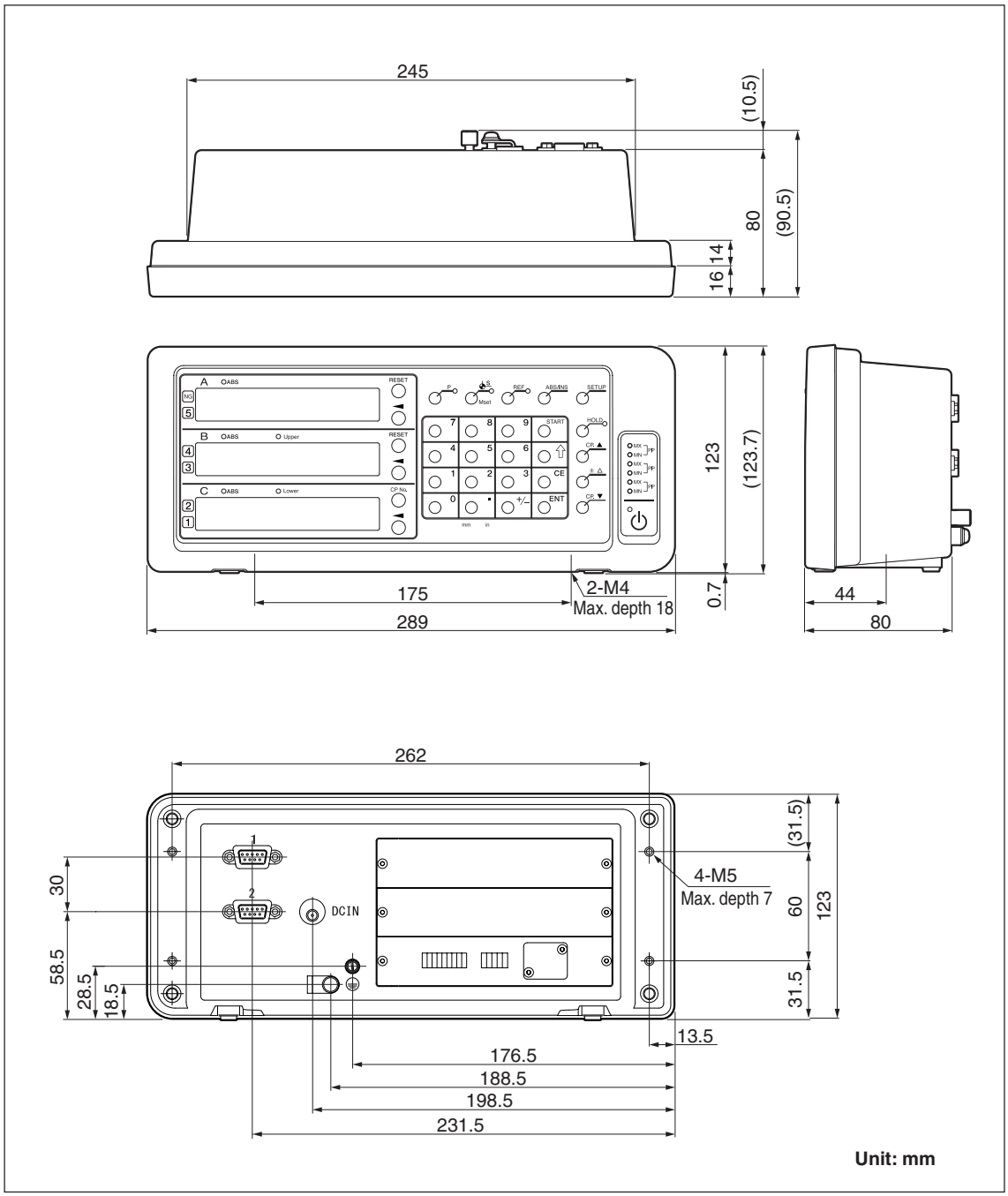

7. Alarm Display

Display	Trouble	Causes/Remedy
Error	Measuring unit not connected	The measuring unit is not connected. Turn off the power, connect the measuring unit, and then turn on the power again. The display value is reset to zero.
SPd Err	Excess speed	The maximum response speed is exceeded at the measuring unit side. Perform resetting operation. (The same condition may occur when the machine is subjected to a major shock.)
F000000	Overflow	When the display has overflowed, an “F” is added to the highest digit. Use in a range where an “F” is not added.
LY (Lights on)	Power failure	The power fails momentarily during measurement. Perform resetting operation.
LY 8 (Flashing)	Error in stored data	The stored data has been changed by noise or other cause. Redo the settings starting from the basic settings. If this error is displayed frequently, the memory may be damaged. Contact your vendor. 8 : Error code (1 to 9, A to F)
r.Error	Error in reference point detection	This is displayed when a measuring unit without a reference point is connected or when the reference point signal wire in a measuring unit with a reference point is broken. Connect a measuring unit with a reference point. If this does not correct the problem, contact your vendor.

8. Troubleshooting

When the unit does not work properly, check the following before calling a Magnescale Co., Ltd. Representative for service.

The power cannot be turned on. (Unstable power connection)	• Disconnect the AC adaptor, and then reconnect after 1 to 2 minutes. • Check the connection and conduction of the power cord. • Check that the power voltage range is correct.
LY is displayed (Alarm)	• Check the connection and conduction of the power cord. • Check for high noise levels. (Try replacing with a normal axis.) • Disconnect the AC adaptor, and then reconnect after 1 to 2 minutes. • Perform resetting operation.
Error is displayed (Alarm)	• Check that the measuring unit signal connector is secured by screws. • Check that the conduit cable is not damaged or disconnected. • Check to see if the measuring unit has moved faster than the maximum response speed, or if there was a large vibration. • Check for high noise levels. (Try replacing with a normal axis.) • Disconnect the AC adaptor, and then reconnect after 1 to 2 minutes. • Perform resetting operation.
No counting	• Disconnect the AC adaptor, and then reconnect after 1 to 2 minutes. • Check to see if the measuring unit signal connector is loosely coupled. (Try replacing with a normal axis.)
Erroneous counting (The unit sometimes miscounts)	• Disconnect the AC adaptor, and then reconnect after 1 to 2 minutes. • Check to see if the measuring unit signal connector is loosely coupled. • Check that the ground wire is properly connected to the ground. Also check for rust or breakage. • Check that the power is in the specified range. (Use an automatic AC voltage regulator (AVR) to keep the power voltage within the specified range.) • Check that the unit is grounded correctly.
Accuracy cannot be obtained	• Check to see if the unit occasionally miscounts. • Check for any mechanical trouble that may affect accuracy. (Any trouble due to machine adjustment, sagging or play) • Check to see if there is a significant temperature difference between the measuring unit, machine and work.
Cannot detect reference point	• Check that the reference point detection position is correct. • Check that the reference point detection direction is correct.

When the cause of the above is known, take appropriate measures.
If you suspect a malfunction, check to see if the measuring unit has overrun or other problem has occurred, then check the software version and contact the service center.

Checking the software version number

- Power ON → LY → Press the S key → The version number is displayed.
  Ver**.** (**.**: version)
- Press any key. The display returns to LY .

■ Cleaning

To clean the display and casing:

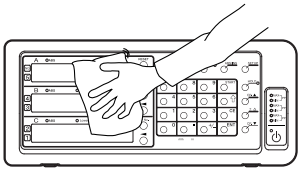

Wipe with a dry cotton cloth

To remove heavy dirt:

Use diluted neutral detergent

9. Supplement

9-1. Setting Flowcharts

Basic settings

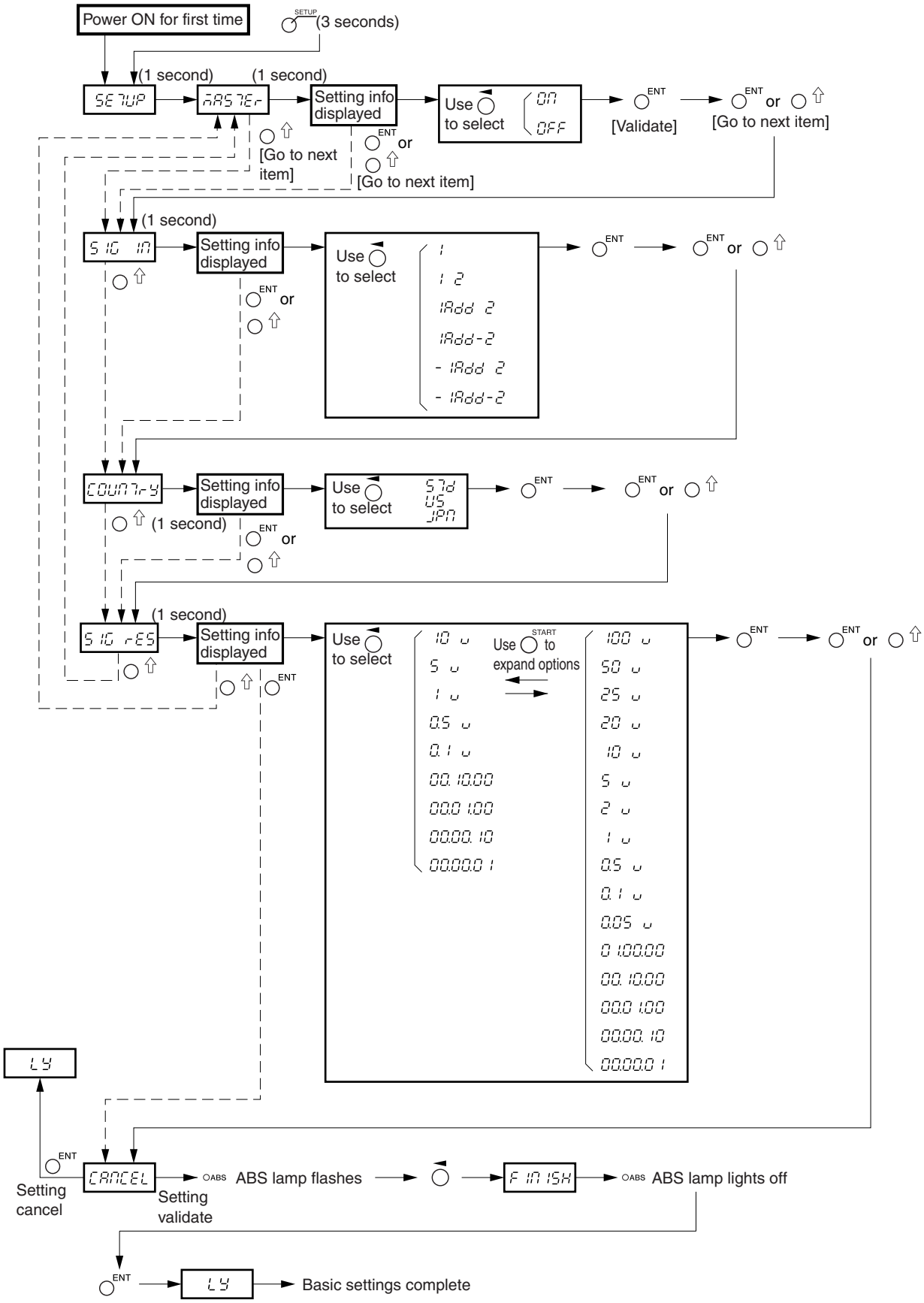

Advanced settings

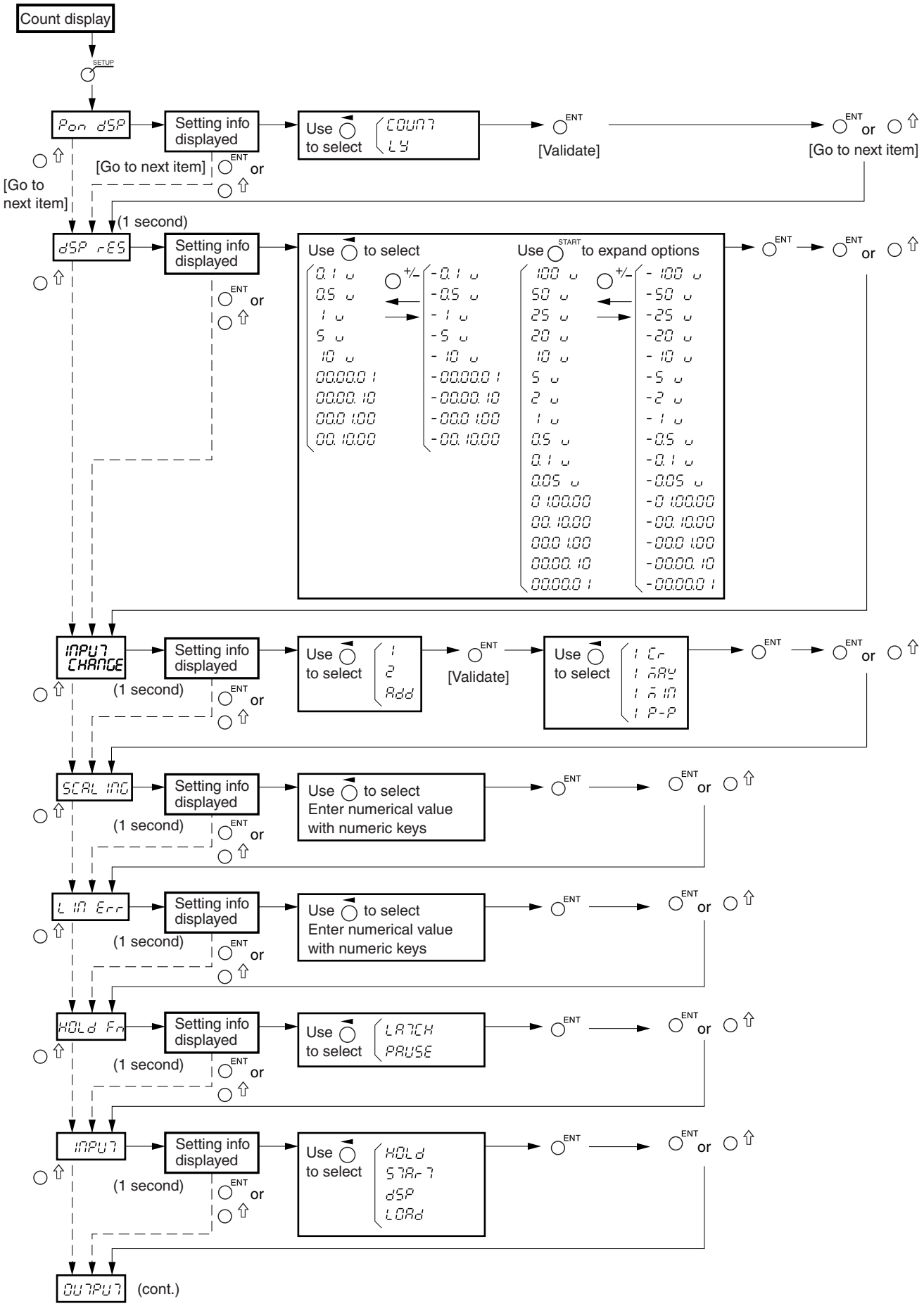

(cont.)

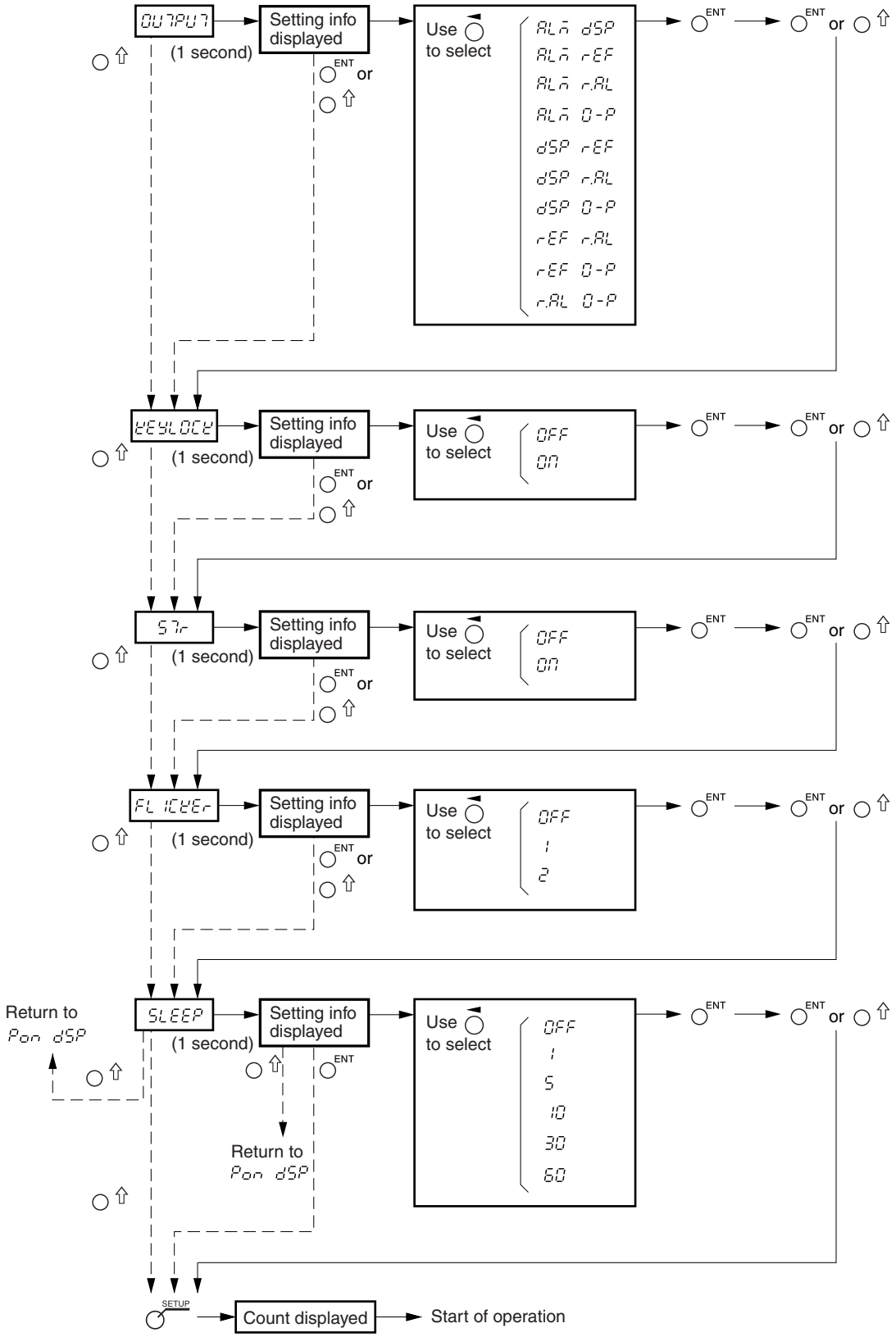
OUTPUT
(1 second)
Setting info displayed
ENT or
Use to select
ALA dSP
ALA rEF
ALA r.AL
ALA O-P
dSP rEF
dSP r.AL
dSP O-P
rEF r.AL
rEF O-P
r.AL O-P
ENT
ENT or
KEYLOCK
OFF
ON
S7r
FLICKER
1
2
SLEEP
5
10
30
60
Return to Pon dSP
SETUP
Count displayed
Start of operation

9-2. Key Operations

RESET Reset key and external reset input	At power ON		LY display → Count display: During restart operation, INC display (master calibration OFF) or when master calibration is ON, display waits to go past reference point. After going past reference point, display changes to count display.
	During count display	Count display axis	Each axis : INC = 0, ABS = unchanged, Peak value = 0
		Error display axis	Each axis : INC = 0, ABS = 0, Peak value = 0 However, when master calibration is ON, display waits to go past reference point.
START Start key and external start input	At power ON		Operation prohibited
	During count display	Count display axis	Restarts peak value calculation for each axis/all axes.
		Error display axis	Operation prohibited
ABS/INS ABS/INC display switching key	At power ON		Operation prohibited
	During count display	Count display axis	Switches each axis/all axes between ABS and INC display.
		Error display axis	Operation prohibited
SETUP SETUP key	At power ON		Hold down to access basic settings.
	During count display		Accesses advanced settings.
P Preset key	At power ON		Operation prohibited
	During count display		Preset lamp lights on and preset operation is enabled (= preset mode).
Axis select key, numeric key and ENT key/ ⇧ key operation	Valid in preset mode		(Prohibited when datum point lamp or REF lamp is lit.)
	During count display	Count display axis	Up to three values can be stored/edited for each axis.
		Error display axis	Operation prohibited
External preset value call (preset recall input)	Valid even in other than preset mode		(Prohibited when datum point lamp or REF lamp is lit.)
	During count display	Count display axis	Calls the first preset value for each axis.
		Error display axis	Operation prohibited
S Datum point key / When not using master calibration function	At power ON		Version display
	During count display		Datum point lamp lights on and datum point operation is enabled (= datum point mode).
Axis select key, numeric key and ENT key operation	Valid in datum point mode		(Prohibited when preset lamp or REF lamp is lit.)
	During count display	Count display axis	The values for each axis can be stored/edited.
		Error display axis	Operation prohibited
S Datum point key / When using master calibration function	At power ON		Version display
	During count display		Datum point lamp lights on and master setting operation is enabled (= master setting mode).
Axis select key, numeric key and ENT key operation	Valid in master setting mode		(Prohibited when preset lamp or REF lamp is lit.)
	During count display	Count display axis	The values for each axis can be stored/edited.
		Error display axis	Operation prohibited

REF key	When not using master calibration function	At power ON		Operation prohibited
		During count display		REF lamp lights on and reference point operation is enabled (= reference point mode)
	Axis select key and ENT key operation	Valid in reference point mode		(Prohibited when preset lamp or datum point lamp is lit.)
		During count display	Count display axis	Reference point hold operation for each axis
			Error display axis	Operation prohibited
	Axis select key, datum point key, numeric key and ENT key operation	Valid in reference point mode		(Prohibited when preset lamp or datum point lamp is lit.)
		During count display	Count display axis	Reference point load operation for each axis
			Error display axis	Operation prohibited
	External reference point load input	Valid even in other than reference point mode		(Prohibited when preset lamp or datum point lamp is lit.)
		During count display	Count display axis	Reference point load operation for each axis
			Error display axis	Operation prohibited
REF key	When using master calibration function	At power ON		Operation prohibited
		During count display		REF lamp lights on and reference point operation is enabled (= master relocation mode)
	Axis select key and ENT key operation	Valid in master relocation mode		(Prohibited when preset lamp or datum point lamp is lit.)
		During count display	Count display axis	Master calibration function started by reference point operation → After going past reference point, operation shifts automatically to datum point setting mode → Master calibration value stored by setting a datum point.
			Error display axis	Operation prohibited
Hold key	Hold function	O	Select from latch and pause. Latch : Display held while latched (Display hold) Pause: Peak calculation stopped while paused (Peak calculation hold)	
CE key		Cancels each input operation partway.		
CP. ▲ key, CP. ▼ key		At power ON		Operation prohibited
		During count display	When using comparator	Switches the comparator setting values
			When not using comparator	Operation prohibited
±△ key		At power ON		Operation prohibited
		During count display	When using comparator	Differential value input during comparator value input
			When not using comparator	Operation prohibited

このマニュアルに記載されている事柄の著作権は当社にあり、説明内容は機器購入者の使用を目的としています。
したがって、当社の許可なしに無断で複写したり、説明内容 (操作、保守など) と異なる目的で本マニュアルを使用することを禁止します。

本手册所记载的内容的版权归属Magnescale Co., Ltd.，仅供购买本手册中所记载设备的购买者使用。
除操作或维护本手册中所记载设备的用途以外，未经 Magnescale Co., Ltd. 的明确书面许可，严禁复制或使用本手册的任何内容。

The material contained in this manual consists of information that is the property of Magnescale Co., Ltd. and is intended solely for use by the purchasers of the equipment described in this manual.
Magnescale Co., Ltd. expressly prohibits the duplication of any portion of this manual or the use thereof for any purpose other than the operation or maintenance of the equipment described in this manual without the express written permission of Magnescale Co., Ltd.

Le matériel contenu dans ce manuel consiste en informations qui sont la propriété de Magnescale Co., Ltd. et sont destinées exclusivement à l'usage des acquéreurs de l'équipement décrit dans ce manuel.
Magnescale Co., Ltd. interdit formellement la copie de quelque partie que ce soit de ce manuel ou son emploi pour tout autre but que des opérations ou entretiens de l'équipement à moins d'une permission écrite de Magnescale Co., Ltd.

Die in dieser Anleitung enthaltenen Informationen sind Eigentum von Magnescale Co., Ltd. und sind ausschließlich für den Gebrauch durch den Käufer der in dieser Anleitung beschriebenen Ausrüstung bestimmt.
Magnescale Co., Ltd. untersagt ausdrücklich die Vervielfältigung jeglicher Teile dieser Anleitung oder den Gebrauch derselben für irgendeinen anderen Zweck als die Bedienung oder Wartung der in dieser Anleitung beschriebenen Ausrüstung ohne ausdrückliche schriftliche Erlaubnis von Magnescale Co., Ltd.

日本からの輸出時における注意

本製品 (および技術) は輸出令別表第1の16の項 (外為令別表16の項) に該当します。キャッチオール規制による経済産業省の許可要否につきましては、輸出者様にてご確認ください。

For foreign customers

Note: This product (or technology) may be restricted by the government in your country. Please make sure that end-use, end user and country of destination of this product do not violate your local government regulation.

Magnescale Co., Ltd.

45 Suzukawa, Isehara-shi, Kanagawa 259-1146, Japan

LY71
4-113-990-1B

2015.1
Printed in Japan
©2009 Magnescale Co., Ltd.

Automation and
Metrology International,
LLC
1-888-354-2525
auto-met.com