HEIDENHAIN

Measuring Devices

For Machine Tool Inspection and Acceptance Testing

September 2013

Automation and Metrology International, LLC
8808 Tyler Blvd, Mentor, OH 44060

1-888-354-2525 | sales@auto-met.com
Request a quote: auto-met.com

Machine tool performance from the point of view of compliance to tolerances, surface definition, etc., is determined essentially by the accuracy of machine movement.

For precision machining it is therefore important to measure and, if necessary, compensate for deviations in motion. Standards and directives for inspecting machine tools, such as ISO 230-2, ISO 230-3, ISO 230-4 and VDI/DGQ 3441, stipulate a number of measuring methods for determining static and dynamic deviations.

In combination with their powerful evaluation software, measuring devices from HEIDENHAIN for inspection and acceptance testing of machine tools make precise and informative measurements of the machine possible with a minimum of mounting and adjustment efforts.

This catalog supersedes all previous editions, which thereby become invalid. The basis for ordering from HEIDENHAIN is always the catalog edition valid when the contract is made.

Standards (ISO, EN, etc.) apply only where explicitly stated in the catalog.

Contents

Introduction			
	Areas of application		**4**
	Configuration		**5**
Measurement methods			
	ACCOM evaluation software		**6**
	Dynamic measurements	• Circular interpolation test • Free-form test • Step response test	**6**
	Static measurement	• Positioning accuracy • Guideway error	**8**
	Measurement of the thermal drift		**9**
Measuring devices for the inspection of linear axes			
	KGM 181 **KGM 182** **KGM 282**	Grid encoders for • Short linear movements • Circular movements • Free-form tests	**10**
	VM 182	Comparator measuring device for • Linear axes • Guideway errors	**12**
Measuring devices for inspection of rotary axes			
	General information	Fundamentals and mounting instructions	**14**
	Angle encoders	ROD 880, RON 886, RPN 886, RON 905 overview	**15**
Accessories			
	EIB 74x	External Interface Box	**16**
	Adapter cables		**17**

Introduction
Areas of application

Conventional inspection and acceptance testing of machine tools is limited essentially to static measurement of the geometrical machine structure without load and—on controlled machines—to measuring positioning accuracy. The final results of machining are increasingly influenced by dynamic deviations from the nominal contour and by high acceleration rates in the machine tool. Test workpieces are therefore produced and inspected for dimensional accuracy in order to draw conclusions about the dynamic behavior of the machine.

HEIDENHAIN offers measuring devices for direct capture of **dynamic and static** deviations. The advantage of this direct inspection method over inspecting only the results of the machining lies in its separation of technological influences from machine influences, and in its capability of distinguishing individual factors of influence.

Dynamic measurements—especially at high traversing speeds—provide information on contouring behavior that permits conclusions about both the condition of the machine tool as well as the parameter settings of the control loop consisting of the CNC control, drives, and position feedback systems. This information can be used to optimize the behavior of the machine (e.g. kv factor, reversal peaks).

Static measurements, such as the measurement of position error in linear and rotary axes using a comparator system, permit conclusions about the geometric accuracy and thermal behavior of the machine.

Machine tool builders use the results of machine measurements to develop design measures for improving accuracy. Such measurements also help them to optimize the commissioning parameters of the control loop wherever they influence the accuracy of a CNC machine.

Machine-tool users can use the measuring devices for acceptance testing and regular accuracy inspection of their machine.

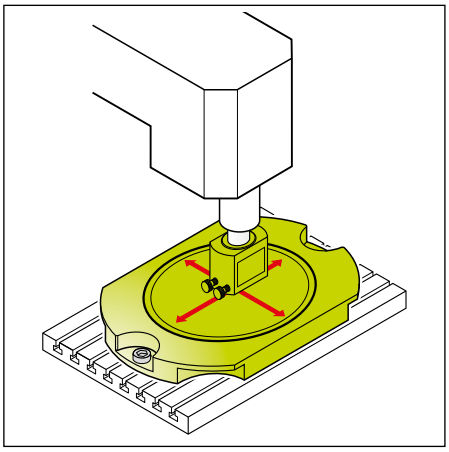

Circular interpolation tests with very small radii and free-form tests provide information on the dynamic behavior of the control, and circular interpolation tests with large radii provide information on the machine geometry.

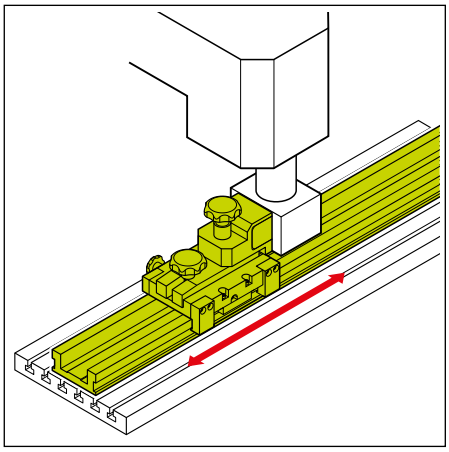

Position accuracy and repeatability, as well as guideway errors of linear machine axes, are determined with a comparator system.

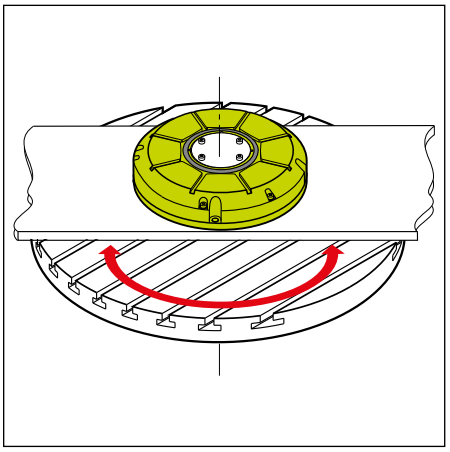

The position accuracy and repeatability of rotary axes, rotary tables and tilting tables can also be determined. A very precise angle encoder serves as comparator system.

Configuration

A typical setup for inspecting a machine tool consists of the following components:
- Measuring device for inspecting axis movements (KGM, VM or angle encoder)
- EIB 74x External Interface Box
- PC with ACCOM evaluation software

The measuring devices for inspection of linear axes—KGM 181, KGM 182 or KGM 282 grid encoder and the VM 182 comparator system—measure the actual path of traverse without contact and highly dynamically. Both measuring devices permit a highly accurate, real 2-D measurement.

Angle encoders are used to measure rotary axes. They are attached to the rotary table or tilting axis, and are connected to the stationary machine element via a measuring bridge.

Since the inspection setup operates completely independently, no communication is necessary between the PC and the CNC. Machines with any type of control can be inspected. The ACCOM evaluation software simply needs to be used to program the same traverse motions on the CNC and on the PC.

ACCOM offers the possibilities of importing NC programs as well as exporting the test NC programs created with ACCOM. This reduces programming efforts, since, for example, free-form contours can simply and quickly be loaded from existing NC programs. HEIDENHAIN plain-language programs can easily be exchanged directly between a TNC control from HEIDENHAIN and the PC. DIN/ISO programs in simplified G-code format can also be imported by ACCOM.

ACCOM automatically detects the beginning of the inspection procedure—for example when a certain distance or angle has been moved from the starting position.

Measuring points are also recorded automatically whenever predefined conditions have been fulfilled (position window, speed window).

The measured data is processed by ACCOM, and then displayed in a clearly understandable manner. The data can also be loaded by other programs (e.g. Matlab, Origin, Excel, etc.), since they are saved in ASCII format.

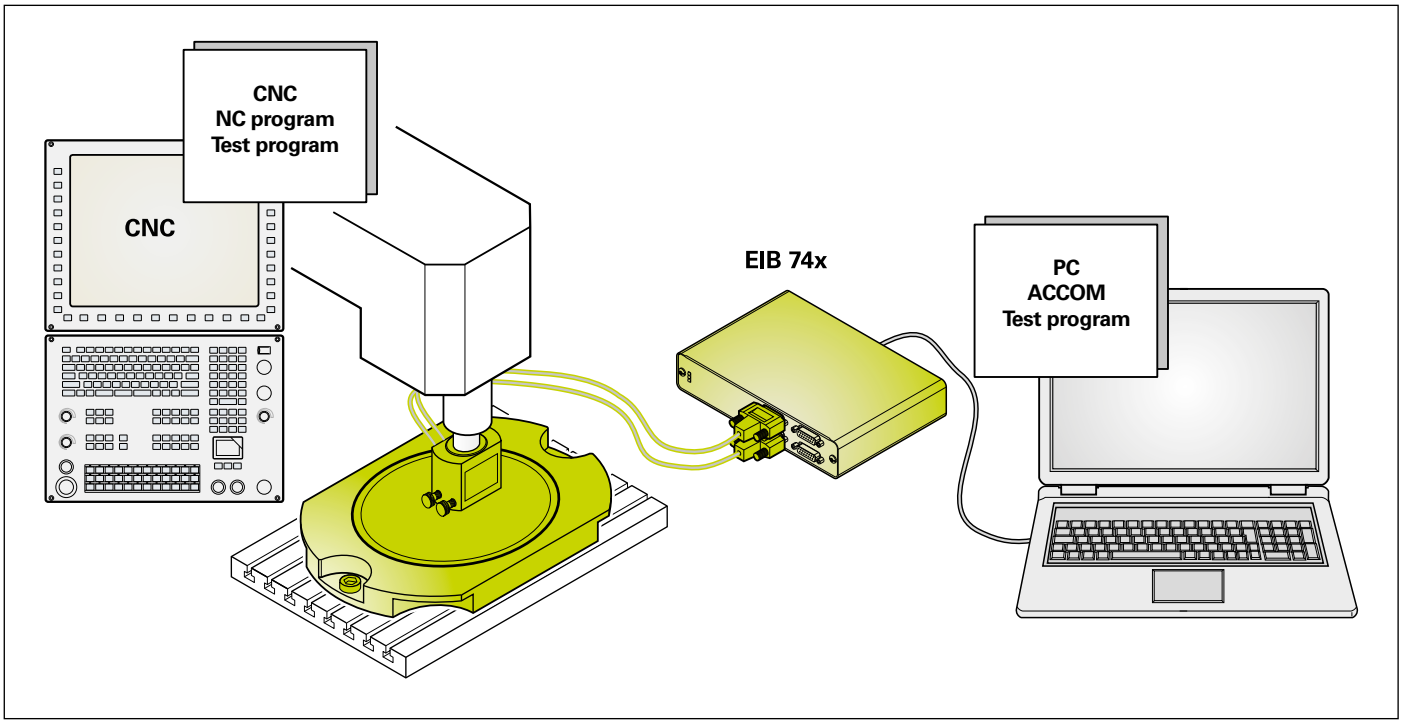

Measurement methods
ACCOM evaluation software

The measurement methods for inspection and acceptance testing of machine tools are governed by national and international standards and directives. The **ACCOM evaluation software** for **PCs** from HEIDENHAIN is an easy-to-use program for measured value acquisition and evaluation according to the DIN ISO 230-2, ISO 230-3, DIN ISO 230-4 and ISO 10791-6 (K2 and K3) standards, as well as the VDI/DGQ directive 3441. The ACCOM evaluation software runs on all PCs with Windows 2000/XP/Vista (32-bit)/7 and 8 (32/64-bit).

Dynamic measurements

Circular interpolation test
In the circular interpolation test, the CNC control performs a circular interpolation in the working plane.

The ACCOM evaluation software compares the values measured by the grid encoder with the ideal (programmed) circular path, and shows the deviations enlarged on the PC screen. ACCOM also calculates the numerical values, such as circular error, circular backlash and radial error, according to DIN ISO 230-4.

The data measured with the circular interpolation tests permit conclusions about the causes of the errors:
Orthogonality errors of the machine axes
- Reversal peaks at quadrant transitions
- Hysteresis, reversal error
- Incorrect error compensation values in the control
- Errors resulting from irregular thermal expansion of machine components
- Tilt and sag in the machine axes
- Axis adjustments
- Influences of traversing speeds
- Influence of acceleration

Circular interpolation tests performed over large radii provide information on the machine geometry. On the other hand, circular interpolation tests with small radii provide information on the accuracy of the control under high axis acceleration rates. The influence of the machine geometry on the measuring results of tests with small radii is insignificant. The control and drives, however, have a very strong effect.

Circular interpolation tests are performed with the **KGM 181**, **KGM 182** or **KGM 282** grid encoders.

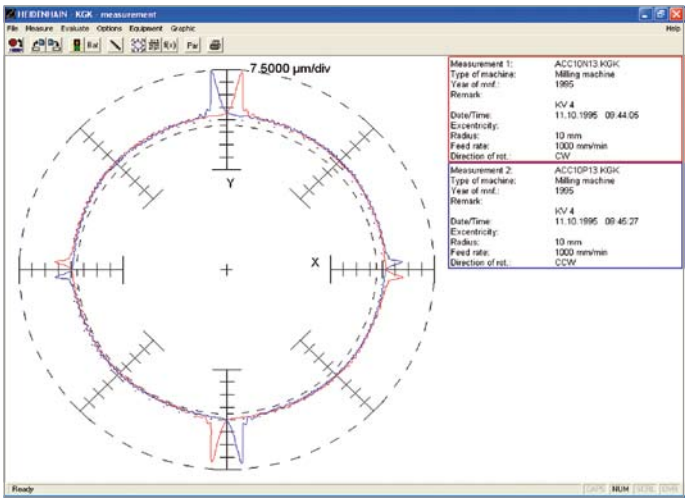

Standardized representation of a circular interpolation test with a KGM: The reversal peaks at the quadrant transitions are visible, as is the difference between clockwise and counterclockwise traverse

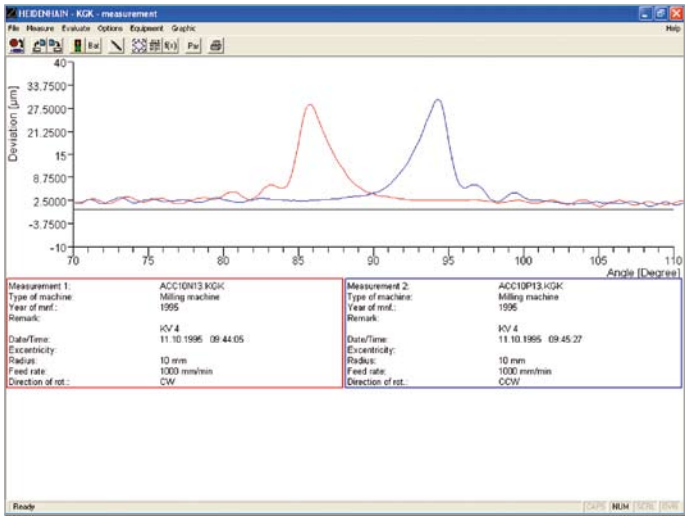

The line graph shows a magnified view of the reversal peaks at 90°

Free-form test

In the free-form test, the CNC moves the machine axes in a plane on any programmed path. The KGM is used to measure the path actually traversed. ACCOM displays the errors in various views. The dynamic behavior of the machine can be evaluated at corners and transitions in the contour. Free-form paths as per ISO 10791—K2 feed rates and K3 interpolation of two axes—can be inspected.

Free-form interpolation tests are performed with the **KGM 181**, **KGM 182** or **KGM 282** grid encoders.

The free form shown features some interesting contour transitions:

- Continuous transition from line to arc
- Continuous transition from arc to line
- Abrupt transition from line to arc
- Abrupt transition from arc to line
- Abrupt transition from line to line

Other typical free-form tests can be performed with the KGM to detect the following errors or effects of the control or mechanics, for example:

- Orthogonality of two axes (large cross)
- Natural frequencies (slanted lines at approx. 45°, corners)
- Path interpolation of two axes (slanted lines at small angles)

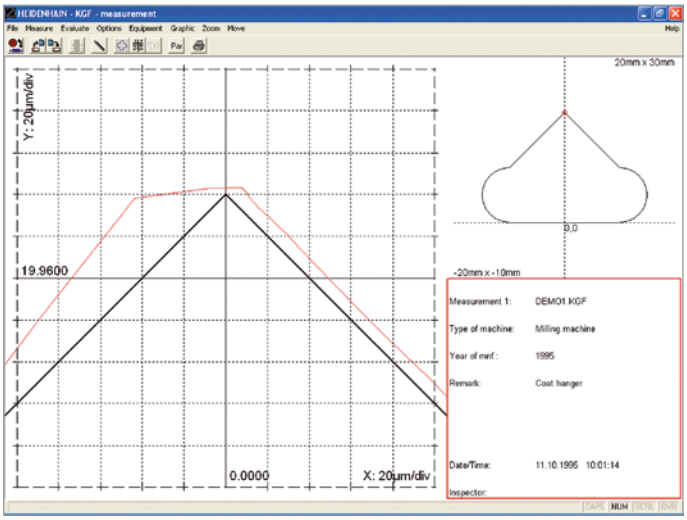

Standardized representation of a free-form test with a KGM and detail zoom: here a normal view shows an overshoot with the resulting rounding-off error (nominal path in black, actual path in red).

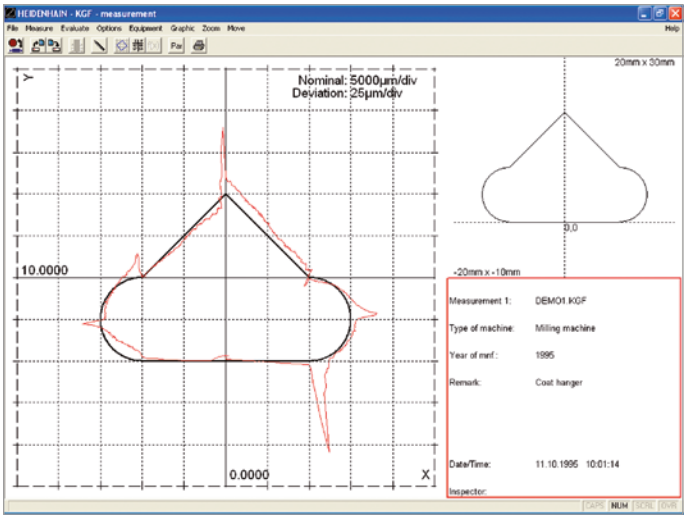

Result of a free-form test with excessive errors

Step response test

The step response test can be used to measure the smallest possible positioning increment (step-response function) and provide information on the influence of static friction and the accuracy with which positions can be held. This test is also intended for high-precision tasks requiring increments of as small as 0.1 µm to 0.01 µm. ACCOM permits graphical representation of distance over time (Xt, Yt) and of speed over time (vt).

The step response test can be performed with **KGM 181**, **KGM 182** or **KGM 282** grid encoders as well as with the **VM 182** comparator system.

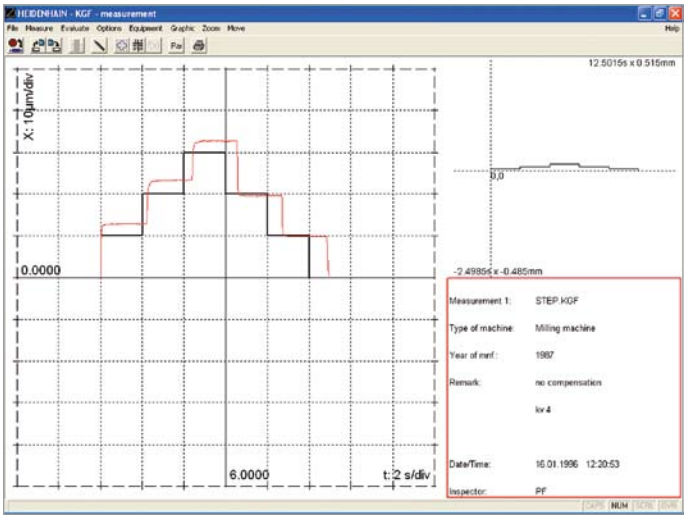

Result of a step response test as an "Xt" graph

Measurement methods
Static measurements

The positioning accuracy and repeatability of a machine tool is measured after the machine axis has been moved to certain positions.

Determining the static positioning accuracy of linear axes
The VM and KGM can be used to determine the positioning accuracy of a machine tool when moving machine axes to specified positions. Besides the positioning accuracy, these devices can also measure the guideway error perpendicular to the direction of the machine tool's slide.

ACCOM displays the errors clearly according to the respective standards.

Small traverse paths up to 230 mm can be measured with **KGM 181, KGM 182** or **KGM 282** grid encoders, larger traverse paths up to 1520 mm can be measured with the **VM 182** comparator system.

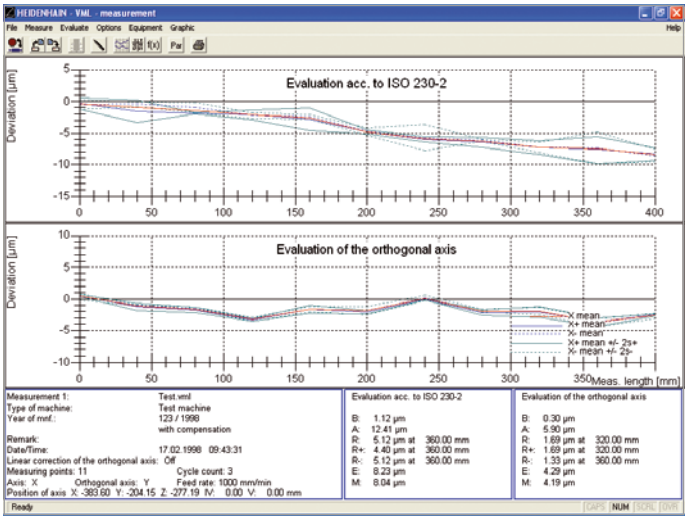

Measurement of the static positioning accuracy as per ISO 230-2 and the guideway error in transverse direction with the VM 182

Determining the static positioning accuracy of rotary axes
By using an angle encoder as reference, any angular positions can be traversed to, and a detailed graph of the accuracy can be recorded.

The high-precision **ROD**, **RON** or **RPN** angle encoders from HEIDENHAIN are used to determine the positioning accuracy of rotary encoders.

ACCOM evaluates the measurement and displays the results clearly.

The example shows the graphs of two high-resolution measurements of a rotary table with a worm gear. The figure above illustrates position feedback via the rotary encoder in the motor ("Semi-Closed Loop"). It shows the errors caused by the worm shaft (short-wave oscillations) and the worm wheel (long-wave oscillations) of the rotary table. The measurement of the same rotary table but with an angle encoder integrated for position capture (Closed Loop) shows a much smaller range of error.

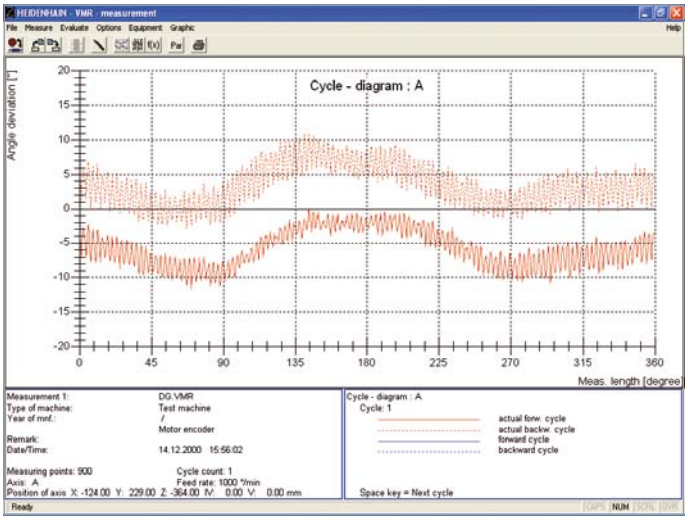

Measurement of the static positioning accuracy of a rotary table with worm gear with the RON 905 and feedback via the rotary encoder in the motor (Semi-Closed Loop) ...

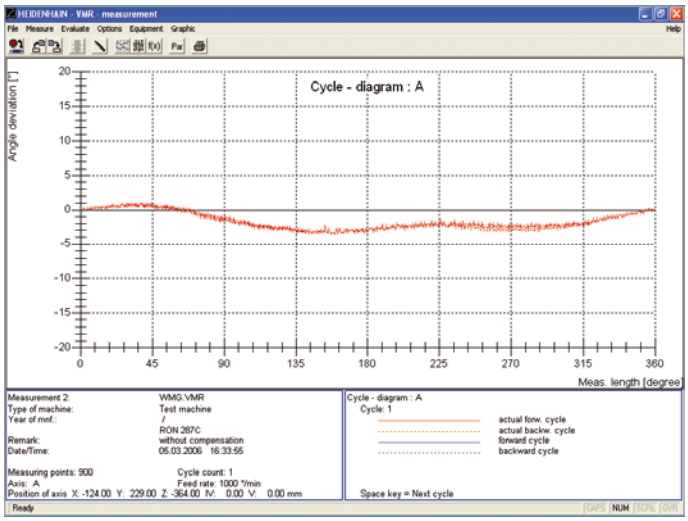

... and for feedback from an angle encoder (Closed Loop)

Measurement of the thermal drift

Determining the thermal behavior of feed axes
The influence of frictional heat in ball screws of linear axes or worm gears of rotary axes on the position behavior of the feed axis becomes obvious when positioning tests are performed as per the ISO 230-3 standard.

This standard contains recommendations for making uniform measurements of thermal shifts of lathes and milling machines as a result of external and internal heat sources.

To test the feed axes, it proposes a repeated positioning to two points that lie as near as possible to the ends of the traverse range at an agreed percentage of the rapid traverse velocity. The change of the positions with respect to the initial value is recorded. The test is to be conducted until a satiation effect is clearly observable.

The example shows the graphs of two measurements on a linear axis. The upper graph, with a rotary encoder in the motor for position capture, shows increasing position errors over time due to heating of the ball screw. The same measurement of the linear axis, but with a linear encoder for position capture, is shown below. The position errors are independent of the heating of the ball screw, since the linear encoder always captures the actual position of the axis slide.

The thermal behavior of linear axes is measured with **KGM 181, KGM 182** or **KGM 282** encoders, or—for longer traverse paths—with the **VM 182** comparator system. The **ROD, RON** or **RPN** angle encoders are used for rotary axes.

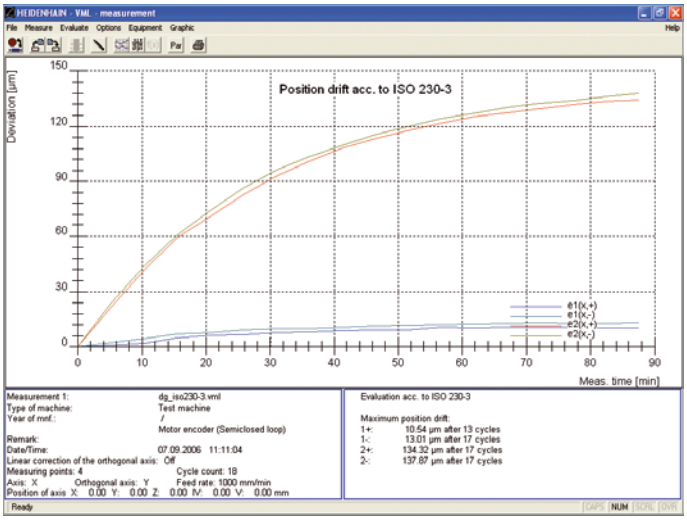

Determining the **thermal behavior** of a linear axis as per ISO 230-3 measurement with the VM 182 and feedback via the rotary encoder in the motor ("Semi-Closed Loop") ...

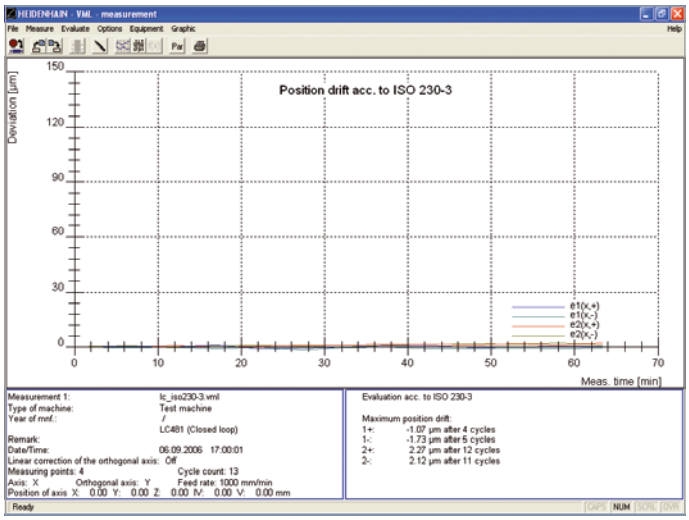

... ... or for feedback from a linear encoder (Closed Loop)

You will find more information on this topic in the following Technical Information documents:
- Accuracy of Feed Axes
- Linear Encoders Improve Machining Accuracy

Measuring devices for inspecting linear axes
KGM 181, KGM 182, KGM 282 grid encoders

The KGM grid encoders consist of a grid plate with a waffle-type graduation, which is embedded in a mounting base, and a scanning head. During measurement, the scanning head moves over the grid plate without making mechanical contact. The KGM encoders capture any motions in a plane and separately transmit the values measured for the two axes.

Area of application
The KGM encoders dynamically test the contouring accuracy of controlled machine tools. For example, they make **circular interpolation tests** with radii ranging from 115 mm down to 0.1 mm at feed rates up to 80 m/min possible. Especially at very small radii, the errors resulting from the machine's geometry no longer have an influence on the measurement results.

The contact-free scanning also permits **free-form tests** over any contours in two axes.

Measuring setup
For setup, the mounting base is fixed onto the workpiece-holding element (such as the machining table) and aligned to the axes. The scanning head is mounted on the tool-holding element (for example, the spindle of a machining center) so that it cannot rotate and is also approximately aligned to the axes.

An adjustment plate is included in delivery for simple adjustment of the scanning gap to 0.5 ± 0.05 mm. The setting screws of the scanning head are then used for the fine adjustment. They are used to optimize the measurement signals displayed in the ACCOM evaluation software.

Items supplied:
- KGM 181, KGM 182 or KGM 282
- Adapter for mounting the scanning head at an angle of 90° (for 20 mm mating ∅)
- Mounting kit for XZ/YZ plane (only for KGM 181)

Accessories:
- EIB 74x External Interface Box
- ACCOM evaluation software
- Two adapter cables between KGM and EIB 74x

		KGM 181	KGM 182	KGM 282
Measuring standard Coefficient of linear expansion		Two-coordinate TITANID phase grating $\alpha_{therm} \approx 8 \times 10^{-6}\ K^{-1}$		
Accuracy grade		± 2 µm		± 1 µm
Measuring range		∅ 140 mm	∅ 230 mm	
Incremental signals		∿ 1 V_{PP}		
Signal period		4 µm in measuring directions I and II		
Measuring step		≥ 0.001 µm (with EIB 74x)		
Voltage supply		5 V ± 0.25 V/< 100 mA (per axis)		
Mount for scanning head		∅ 20h7		
Traversing speed		≤ 80 m/min		≤ 72 m/min
Weight (approx.)	Grid plate Scanning head	4.0 kg 0.6 kg	3.1 kg 0.6 kg	4.9 kg 0.6 kg

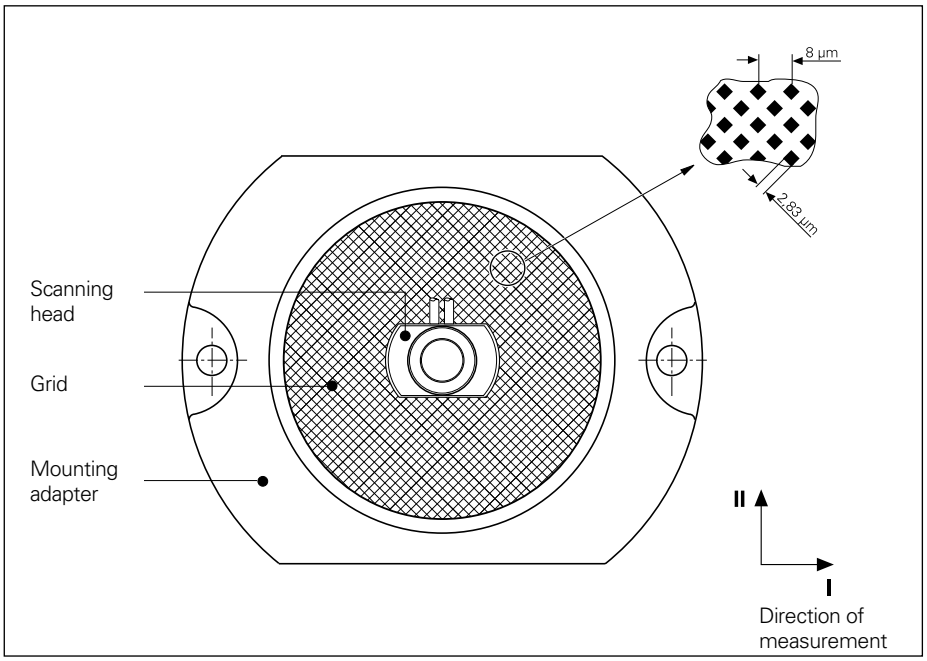

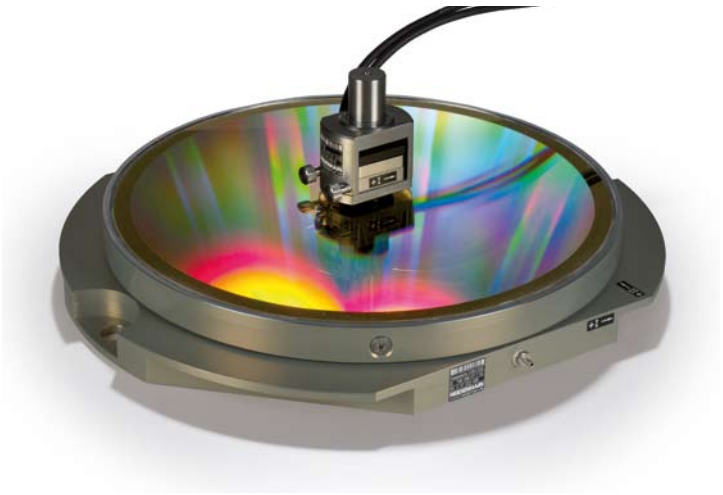

KGM 181/182

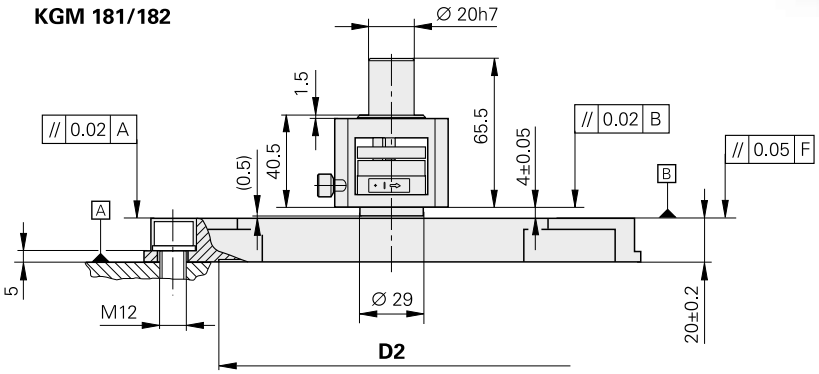

KGM 282

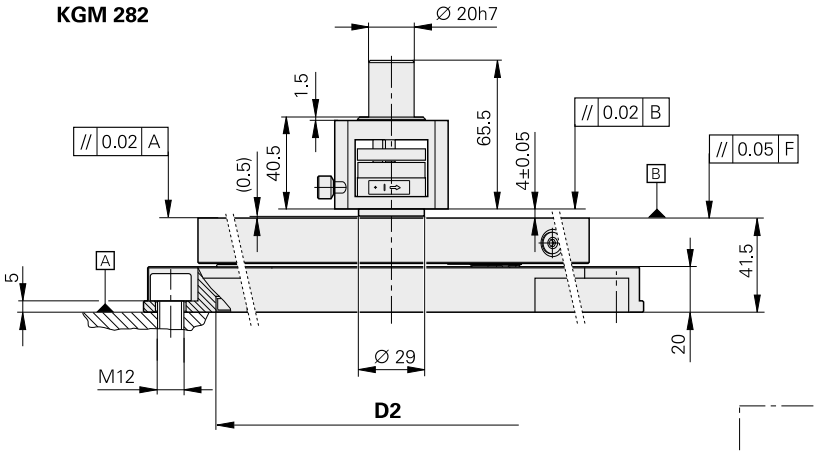

	KGM 181	KGM 182	KGM 282
L	204	304	304
B	180	280	280
D1	Ø 228	Ø 328	Ø 328
D2	Ø 160	Ø 260	Ø 262

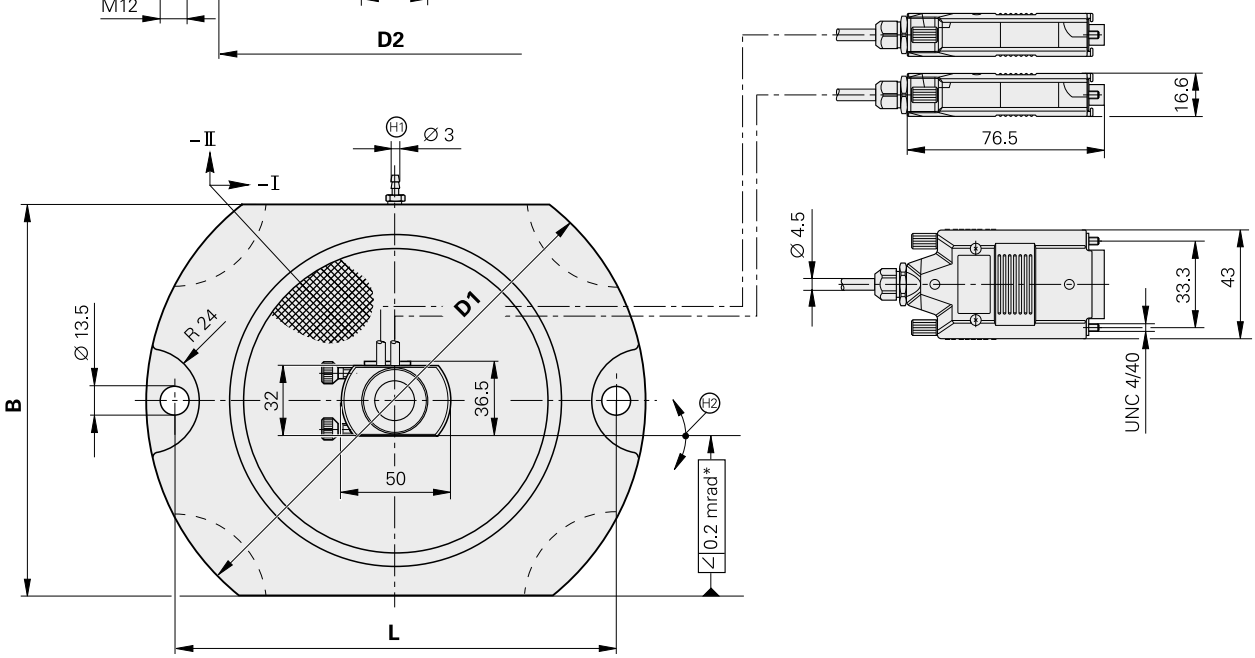

mm

Tolerancing ISO 8015
ISO 2768 - m H
< 6 mm: ±0.2 mm

I, II = Directions of measurement
F = Machine guideway
* = Max. change during operation
H1 = Hose connection nipple for vacuum connection (for fastening on plane surfaces/stone plates)
H2 = Adjusted during mounting

Measuring devices for inspection of linear axes

VM 182 – comparator system

The VM 182 comparator system incorporates a scale with a very precise two-coordinate phase grating and a scanning head that moves over the grating without mechanical contact. The scale is embedded in a massive, U-shaped steel profile, and can therefore be mounted directly on the machine table. Along with the measuring position in longitudinal direction, the VM 182 also captures small errors (± 1 mm) perpendicular to the direction of measurement.

Area of application
The VM 182 serves for acceptance testing, inspection and calibration of machine tools and measuring equipment with traverse ranges up to 1 520 mm. Machine tool builders and distributors can use the VM 182 to determine the linear and nonlinear error curves as well as the reversal error of machine axes according to DIN ISO 230-2. Along with the position error, it also measures the guideway error orthogonal to the traverse direction of the machine axis.

Measuring setup
In mounted condition, the scanning head is connected to the scale by an auxiliary carriage. The scale is clamped paraxially onto the machine table and the scanning head is connected to the machine spindle with a coupling magnet. After mounting is completed, the auxiliary carriage is removed from the scanning head. The generous mounting tolerances simplify installation of the VM 182.

Items supplied:
- VM 182

Accessories:
- Bracket for attaching the scanning head to the machine spindle
- EIB 74x External Interface Box
- ACCOM evaluation software
- Two adapter cables between VM and EIB 74x

		VM 182
Measuring standard Coefficient of linear expansion		Two-coordinate DIADUR phase grating $\alpha_{therm} \approx 10 \times 10^{-6}\ K^{-1}$
Accuracy grade		± 1 µm in longitudinal direction ± 1.5 µm in transverse direction
Measuring length ML Linear direction in mm		420 520 720 1 020 1 220 1 520
Measuring range transverse direction		± 1 mm
Reference mark		One reference mark at beginning of measuring length
Incremental signals		∿ 1 V_{PP}
Signal period		4 µm in longitudinal and transverse direction
Measuring step		≥ 0.001 µm (with EIB 74x)
Voltage supply		5 V ± 5 %/< 100 mA (per axis)
Coupling		Magnetically to a plane surface; bracket available as accessory
Traversing speed		≤ 80 m/min
Weight	Scale Scanning head	Approx. 340 g + 6.7 g/mm ML Approx. 1.86 kg

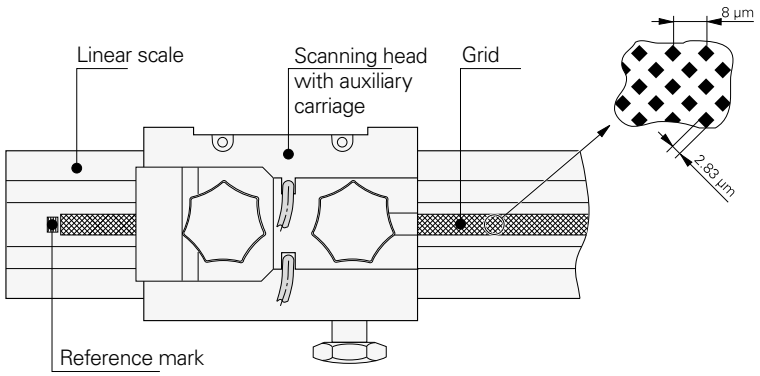

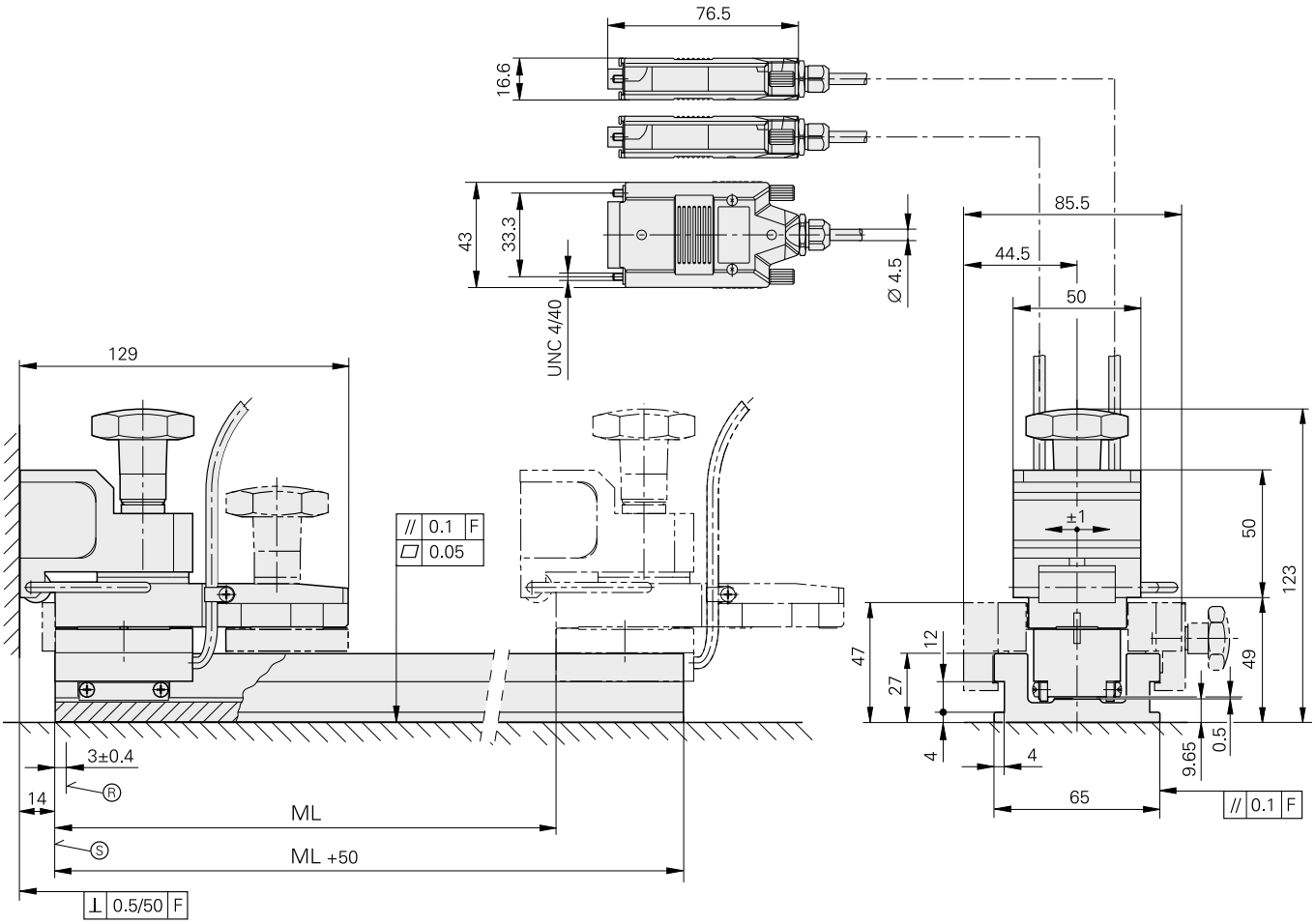

mm

Tolerancing ISO 8015
ISO 2768 - m H
< 6 mm: ±0.2 mm

F = Machine guideway
Ⓡ = Position of reference mark
Ⓢ = Beginning of measuring length (ML)

Measurement of rotary axes
General information

Angle encoders from HEIDENHAIN serve as high-precision reference encoders for the measurement of rotary axes. They permit measurements at any positions. Since no restrictions are necessary, such as 12 positions per 360°, even short-range position errors can be measured.

In addition, angle encoders make highly dynamic motions of the rotary table between the points of measurement possible (as per ISO 230-3).

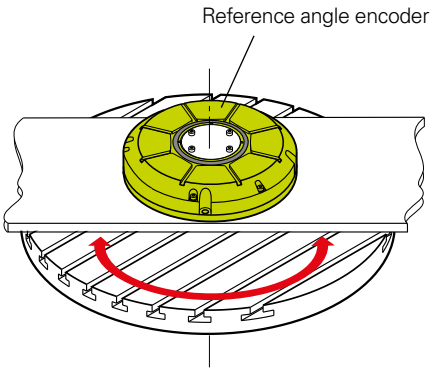

Areas of application
The position errors of rotary axes (rotary or tilting tables, swivel heads) are often decisive factors in a machine's overall accuracy.

At this time, rotary and tilting axes are not involved as simultaneously moving axes in most cases. The positioning accuracy, as per ISO 230-2 for example, is definitive for such index axes. In addition, the dynamic and thermal behavior according to ISO 230-3 is important for the increasing number of simultaneously moving axes.

Measuring setup
Due to the different possibilities for mounting on the machine (rotary and tilting axes, various diameters of rotary tables, etc.), the customer must install the reference angle encoder himself.

A stiff connection between the stator and rotor of the reference encoder must be ensured. Since a certain amount of torque is needed in order for the reference encoder to move, the measuring accuracy will be affected if the connection is not rigid enough.

A connecting element with length L and diameter D between the shaft of the reference encoder and the stationary part of the measuring setup becomes twisted as shown in the graph. Whether the shaft is solid or hollow is of secondary importance.

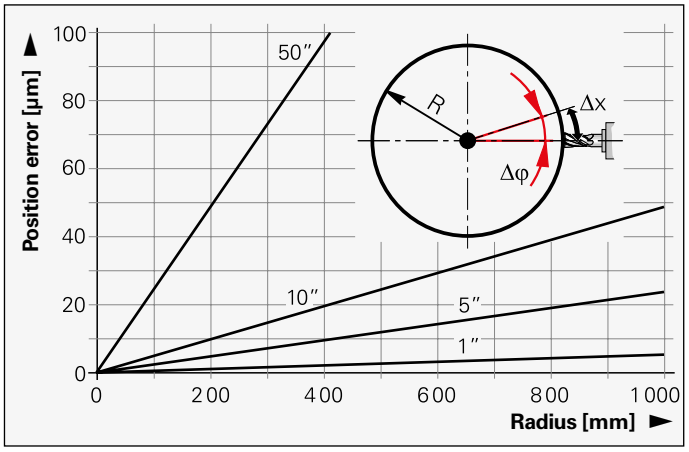

Influence of the distance R of the machining position from the center of the rotary table on the positioning accuracy Δx at various angular errors Δφ of the rotary table

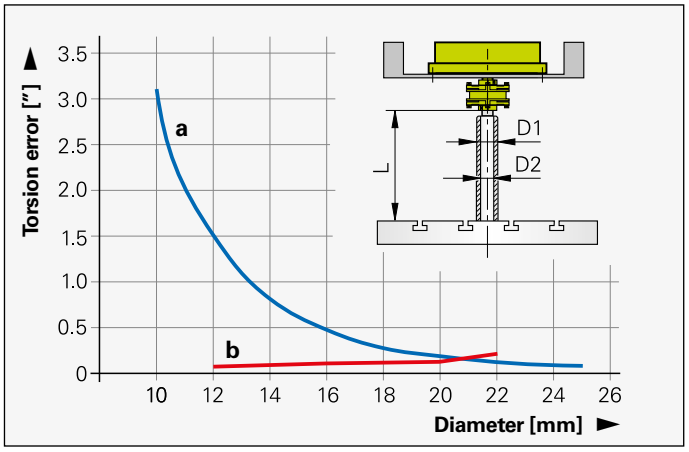

Torsion error of the 100 mm long coupling of an ROD 880 through a
a) Solid shaft with various diameters D1
b) Hollow shaft with outside diameter D1 = 25 mm and various inside diameters D2

Angle encoders for the measurement of rotary axes

Due to their accuracy and mechanical versions, the angle encoders listed here are especially suited for the measurement of rotary axes. They have integral bearings, but are coupled to the shaft differently:

The shaft of the **ROD 880** is connected via a separate shaft coupling to the shaft to be measured. Suitable shaft couplings, such as a K01 diaphragm coupling or K16 and K17 flat couplings are described in the *Angle Encoders with Integral Bearing* catalog.

RON 886 and **RPN 886** encoders have an integrated stator coupling. The shaft to be measured is directly connected with the hollow through shaft.

The **RON 905** also has an integrated stator coupling. The shaft to be measured is directly connected with the blind hollow shaft.

	ROD 880	RON 886	RPN 886	RON 905
System accuracy	± 1"			± 0.4"
Incremental signals	∿ 1 V_{PP}			∿ 11 μA_{PP}
Line count	36000		90000 (≙ 180000 signal periods)	36000
Measuring step with EIB 74x	0.000005°		0.0000005°	0.000005°
Shaft	Solid shaft D = 14 mm	Hollow through shaft D = 60 mm		Blind hollow shaft
Starting torque	≤ 0.012 Nm at 20 °C	≤ 0.5 Nm at 20 °C		≤ 0.005 Nm at 20 °C
Shaft load *Axial* *Radial*	30 Nm; 30 Nm at shaft end	–		–
Weight (approx.)	2.0 kg	2.5 kg		4.0 kg

ROD 880

RON 886/RPN 886

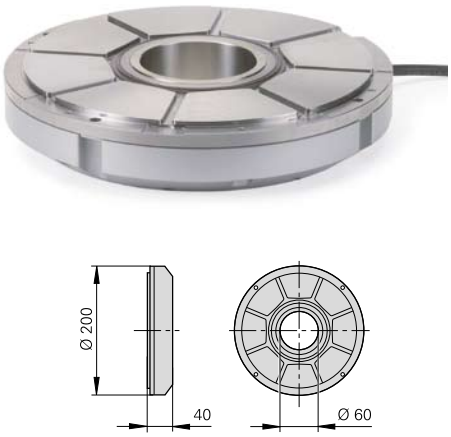

RON 905

For more information, see the *Angle Encoders with Integral Bearing* catalog

Accessories
EIB series – External Interface Box

The EIB 700 series are external interface boxes for precise position measurement. They are ideal for inspection stations and multipoint inspection apparatuses as well as for mobile data acquisition, such as in machine inspection and calibration.

The EIB 700 series are ideal for applications requiring high-resolution encoder signals and fast measured-value acquisition. Ethernet transmission also enables you to use switches or hubs for connecting more than one EIB. It is also possible to use WLAN transmission, for example.

A maximum of **four HEIDENHAIN encoders,** either with sinusoidal incremental signals (∿ 1 V_{PP}; ∿ 11 μA_{PP} on request) or with EnDat interfaces (EnDat 2.1 and 2.2) can be connected to the EIB 700 series.

The EIB 700 series subdivide the periods of the incremental signals up to 4096-fold for **measured-value generation.** The deviations within one signal period are automatically reduced by adjusting the sinusoidal incremental signals.

The integrated **measured-value memory** enables the EIB 700 series to save typically 250000 measured values per axis. Internal or external triggers can be used for axis-specific storage of the measured values.

A standard Ethernet interface using TCP/IP or UDP communication is available for **data output.** This permits direct connection to a PC, laptop or industrial PC. The type of measured-value transfer can be selected through the operating mode (transfer of individual values, block transfer, or transfer upon software request).

Items supplied:
- EIB 74x
- Driver software
- Program examples
- EIB application software

	EIB 741 **EIB 742**		
Encoder inputs	D-sub connections, 15-pin, female (X11 to X14), for four encoders		
Input signals (switchable)	∿ 1 V_{PP} (∿ 11 μA_{PP} upon request)	EnDat 2.1	EnDat 2.2
Input frequency	≤ 500 kHz	–	–
Subdivision factor	4096-fold	–	–
Cable length	≤ 150 m	≤ 150 m	≤ 100 m
Data register for measured values	48 bits (only 44 bits are used)		
Interval counter	Derived from axis 1 (only 1 V_{PP}), Interpolation factor can be set from 1-fold to 100-fold Can be used as trigger source or additional counting axis		
Measured-value memory	Typically 250,000 position values per channel		
Software	• Driver software for Windows, Linux and LabVIEW • Program examples • EIB application software		
Data interface	Ethernet as per IEEE 802.3 (max. 1 gigabit)		
Dimensions	Approx. 213 mm x 152 mm x 42 mm		
Voltage supply	**EIB 741:** 100 V to 240 V AC **EIB 742:** 24 V DC		

Remark:
The features can be enhanced by updating the firmware.

Adapter cables

The cables necessary for connecting the encoders to the EIB 74x subsequent electronics are available as accessories. The maximum cable length of 10 m should not be exceeded.

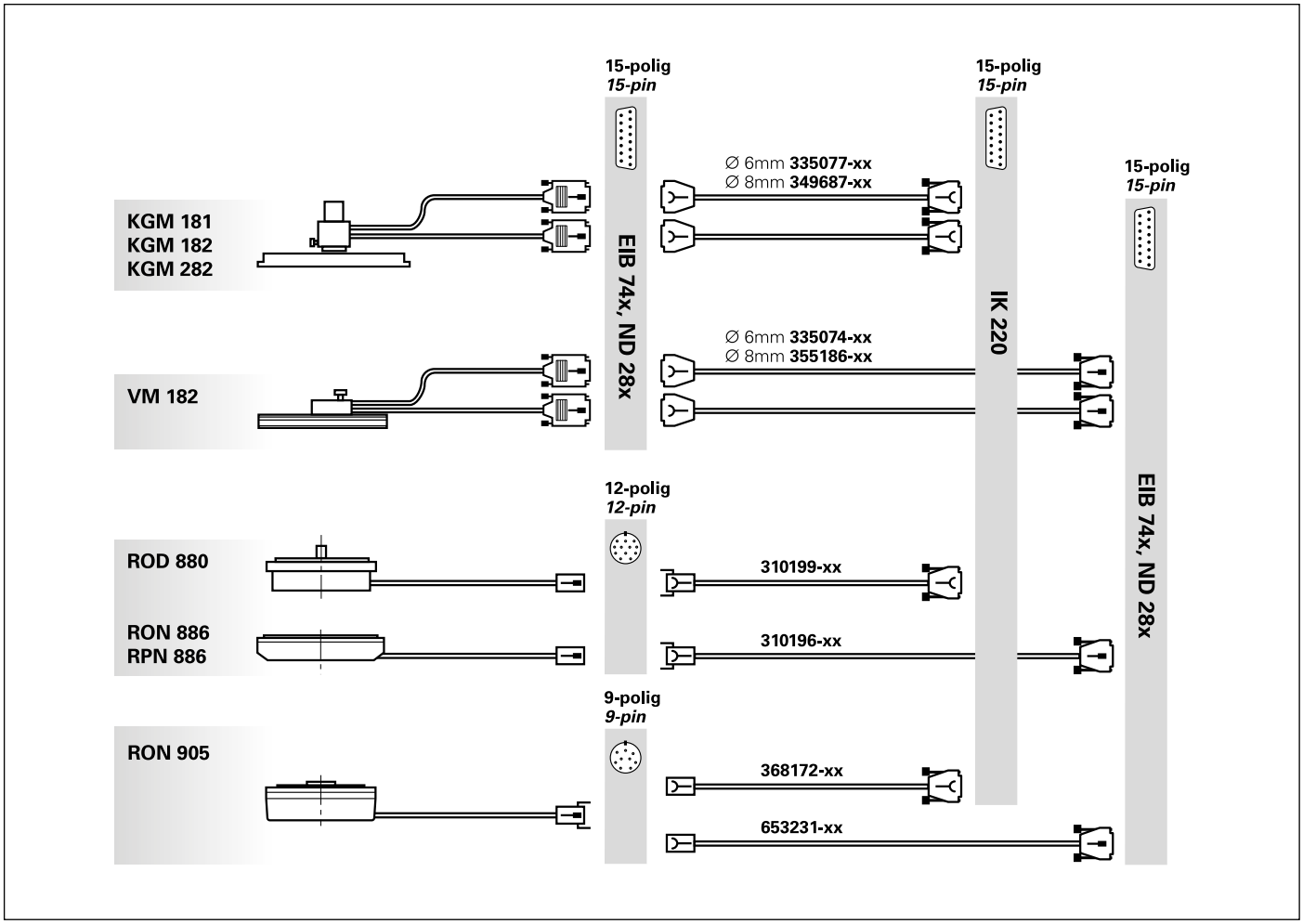

Application examples

Free-form test with KGM 182

Ascertaining positioning accuracy with a VM 182

HEIDENHAIN

DR. JOHANNES HEIDENHAIN GmbH
Dr.-Johannes-Heidenhain-Straße 5
83301 Traunreut, Germany
☏ +49 8669 31-0
FAX +49 8669 5061
E-mail: info@heidenhain.de

www.heidenhain.de

Vollständige und weitere Adressen siehe www.heidenhain.de
For complete and further addresses see www.heidenhain.de

DE **HEIDENHAIN Vertrieb Deutschland**
83301 Traunreut, Deutschland
☏ 08669 31-3132
FAX 08669 32-3132
E-Mail: hd@heidenhain.de

HEIDENHAIN Technisches Büro Nord
12681 Berlin, Deutschland
☏ 030 54705-240

HEIDENHAIN Technisches Büro Mitte
07751 Jena, Deutschland
☏ 03641 4728-250

HEIDENHAIN Technisches Büro West
44379 Dortmund, Deutschland
☏ 0231 618083-0

HEIDENHAIN Technisches Büro Südwest
70771 Leinfelden-Echterdingen, Deutschland
☏ 0711 993395-0

HEIDENHAIN Technisches Büro Südost
83301 Traunreut, Deutschland
☏ 08669 31-1345

AR **NAKASE SRL.**
B1653AOX Villa Ballester, Argentina
www.heidenhain.com.ar

AT **HEIDENHAIN Techn. Büro Österreich**
83301 Traunreut, Germany
www.heidenhain.de

AU **FCR Motion Technology Pty. Ltd**
Laverton North 3026, Australia
E-mail: vicsales@fcrmotion.com

BE **HEIDENHAIN NV/SA**
1760 Roosdaal, Belgium
www.heidenhain.be

BG **ESD Bulgaria Ltd.**
Sofia 1172, Bulgaria
www.esd.bg

BR **DIADUR Indústria e Comércio Ltda.**
04763-070 – São Paulo – SP, Brazil
www.heidenhain.com.br

BY **GERTNER Service GmbH**
220026 Minsk, Belarus
www.heidenhain.by

CA **HEIDENHAIN CORPORATION**
Mississauga, OntarioL5T2N2, Canada
www.heidenhain.com

CH **HEIDENHAIN (SCHWEIZ) AG**
8603 Schwerzenbach, Switzerland
www.heidenhain.ch

CN **DR. JOHANNES HEIDENHAIN (CHINA) Co., Ltd.**
Beijing 101312, China
www.heidenhain.com.cn

CZ **HEIDENHAIN s.r.o.**
102 00 Praha 10, Czech Republic
www.heidenhain.cz

DK **TP TEKNIK A/S**
2670 Greve, Denmark
www.tp-gruppen.dk

ES **FARRESA ELECTRONICA S.A.**
08028 Barcelona, Spain
www.farresa.es

FI **HEIDENHAIN Scandinavia AB**
02770 Espoo, Finland
www.heidenhain.fi

FR **HEIDENHAIN FRANCE sarl**
92310 Sèvres, France
www.heidenhain.fr

GB **HEIDENHAIN (G.B.) Limited**
Burgess Hill RH15 9RD, United Kingdom
www.heidenhain.co.uk

GR **MB Milionis Vassilis**
17341 Athens, Greece
www.heidenhain.gr

HK **HEIDENHAIN LTD**
Kowloon, Hong Kong
E-mail: sales@heidenhain.com.hk

HR Croatia → **SL**

HU **HEIDENHAIN Kereskedelmi Képviselet**
1239 Budapest, Hungary
www.heidenhain.hu

ID **PT Servitama Era Toolsindo**
Jakarta 13930, Indonesia
E-mail: ptset@group.gts.co.id

IL **NEUMO VARGUS MARKETING LTD.**
Tel Aviv 61570, Israel
E-mail: neumo@neumo-vargus.co.il

IN **HEIDENHAIN Optics & Electronics India Private Limited**
Chetpet, Chennai 600 031, India
www.heidenhain.in

IT **HEIDENHAIN ITALIANA S.r.l.**
20128 Milano, Italy
www.heidenhain.it

JP **HEIDENHAIN K.K.**
Tokyo 102-0083, Japan
www.heidenhain.co.jp

KR **HEIDENHAIN Korea LTD.**
Gasan-Dong, Seoul, Korea 153-782
www.heidenhain.co.kr

MX **HEIDENHAIN CORPORATION MEXICO**
20235 Aguascalientes, Ags., Mexico
E-mail: info@heidenhain.com

MY **ISOSERVE SDN. BHD.**
43200 Balakong, Selangor
E-mail: isoserve@po.jaring.my

NL **HEIDENHAIN NEDERLAND B.V.**
6716 BM Ede, Netherlands
www.heidenhain.nl

NO **HEIDENHAIN Scandinavia AB**
7300 Orkanger, Norway
www.heidenhain.no

PH **Machinebanks` Corporation**
Quezon City, Philippines 1113
E-mail: info@machinebanks.com

PL **APS**
02-384 Warszawa, Poland
www.heidenhain.pl

PT **FARRESA ELECTRÓNICA, LDA.**
4470 - 177 Maia, Portugal
www.farresa.pt

RO **HEIDENHAIN Reprezentanţă Romania**
Braşov, 500407, Romania
www.heidenhain.ro

RS Serbia → **BG**

RU **OOO HEIDENHAIN**
125315 Moscow, Russia
www.heidenhain.ru

SE **HEIDENHAIN Scandinavia AB**
12739 Skärholmen, Sweden
www.heidenhain.se

SG **HEIDENHAIN PACIFIC PTE LTD.**
Singapore 408593
www.heidenhain.com.sg

SK **KOPRETINA TN s.r.o.**
91101 Trencin, Slovakia
www.kopretina.sk

SL **NAVO d.o.o.**
2000 Maribor, Slovenia
www.heidenhain.si

TH **HEIDENHAIN (THAILAND) LTD**
Bangkok 10250, Thailand
www.heidenhain.co.th

TR **T&M Mühendislik San. ve Tic. LTD. ŞTİ.**
34728 Ümraniye-Istanbul, Turkey
www.heidenhain.com.tr

TW **HEIDENHAIN Co., Ltd.**
Taichung 40768, Taiwan R.O.C.
www.heidenhain.com.tw

UA **Gertner Service GmbH Büro Kiev**
01133 Kiev, Ukraine
www.heidenhain.ua

US **HEIDENHAIN CORPORATION**
Schaumburg, IL 60173-5337, USA
www.heidenhain.com

VE **Maquinaria Diekmann S.A.**
Caracas, 1040-A, Venezuela
E-mail: purchase@diekmann.com.ve

VN **AMS Co. Ltd**
HCM City, Vietnam
E-mail: davidgoh@amsvn.com

ZA **MAFEMA SALES SERVICES C.C.**
Midrand 1685, South Africa
www.heidenhain.co.za

Zum Abheften hier falzen! / *Fold here for filing!*

208871-28 · 10 · 9/2013 · H · Printed in Germany

Automation and Metrology International, LLC
1-888-354-2525
auto-met.com