OEM Setup Guide

MetLogix Incorporated
175 Canal Street Suite 503
Manchester, NH 03101 USA

August 2021 Issue 2 PN# 15003-00 Rev2
Copyright © 2021 MetLogix Inc. All rights reserved.
Information within this document is subject to change without notice.

Contents

1 The MLX Manual Interface Module - 5 -
1.1 Driver Installation Procedure for the Metlogix USB Encoder Interface - 6 -
1.2 Manual Metlogix Driver Installation - 7 -
1.3 Hard Stop machine zero - 9 -
1.4 Setting machine zero to a specific position - 9 -

2 The MLX CNC Interface Module - 10 -
2.1 Internal Amp - 10 -
2.2 External Amplifier - 20 -

3 Metlogix CNC Interface Driver Installation - 25 -
3.1 Mxcncoptions - 26 -
3.2 Motion Parameters - 26 -
3.3 Buttons and Setup Screens - 30 -

4 M3 Software Installation - 37 -
4.1 The Metlogix installation folder - 37 -
4.2 Metlogix File Output directory - 38 -

5 M3 Software Setup - 39 -
5.1 M3 System Security and User Account setup - 39 -
5.2 Camera Setup - 40 -
5.3 Optical Edge Setup - 50 -
5.4 Stage Correction - 52 -
5.5 Orthogonality (Squareness) - 56 -
5.6 Other Software Settings - 57 -
5.7 Factory and System Options - 57 -
5.8 Contact Information - 57 -
5.9 About Screen - 58 -
5.10 Languages - 58 -
5.11 File Locations - 58 -
5.12 Light Control - 59 -
5.13 Measure - 60 -
5.14 Part View - 61 -
5.15 Printouts - 62 -
5.16 Export - 63 -
5.17 Programs - 64 -
5.18 Desktop - 65 -
5.19 Display Formats - 66 -
5.20 Sounds - 67 -
5.21 Colors - 67 -
5.22 Joystick (CNC Systems Only) - 67 -

6 Operating System/M3 Boot Settings - 68 -

7 Product Warranty - 71 -

8 SOFTWARE LICENSE AGREEMENT - 72 -

1 The MLX Manual Interface Module

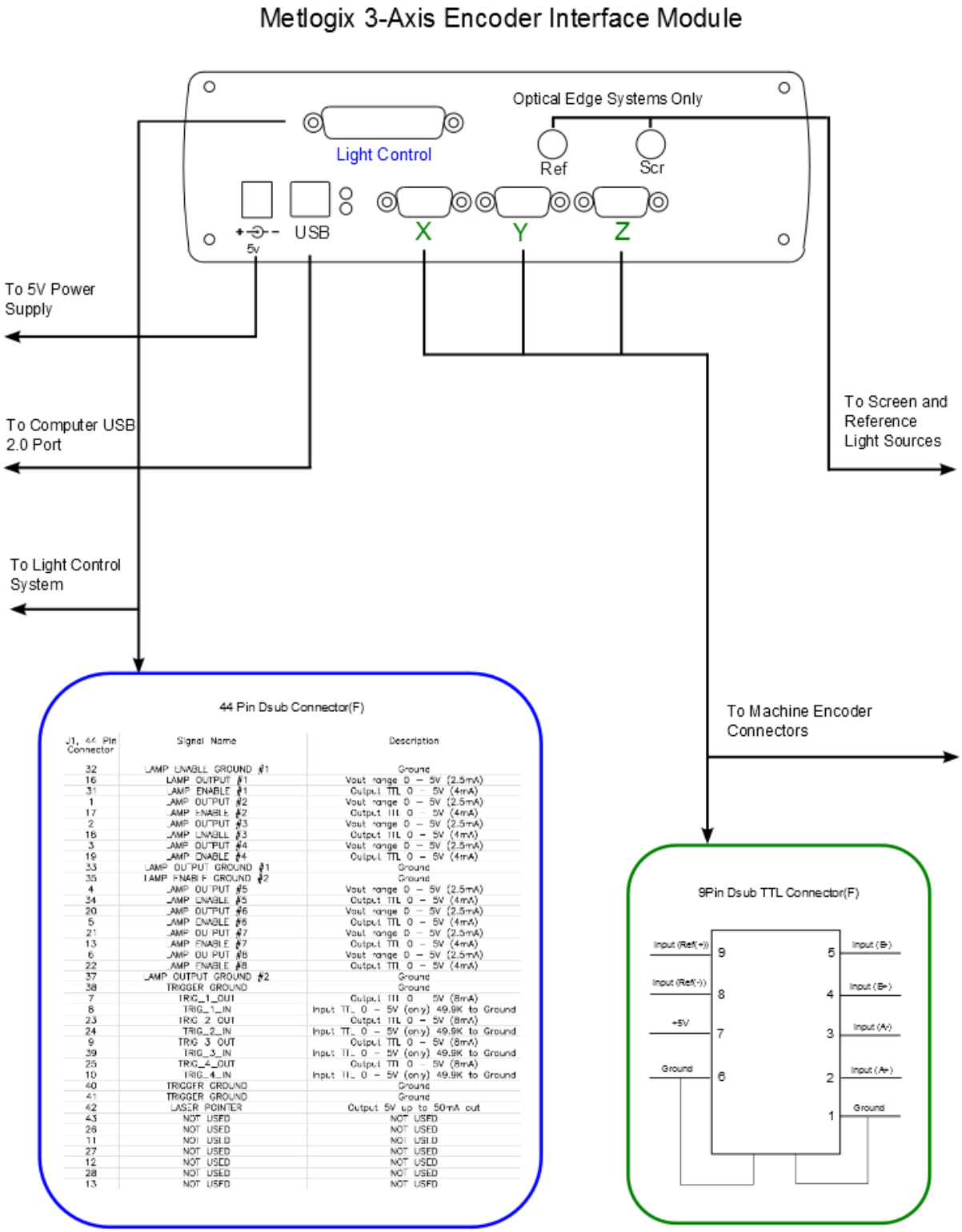

J1, 44 Pin Connector	Signal Name	Description
32	LAMP ENABLE GROUND #1	Ground
16	LAMP OUTPUT #1	Vout range 0 – 5V (2.5mA)
31	LAMP ENABLE #1	Output TTL 0 – 5V (4mA)
1	LAMP OUTPUT #2	Vout range 0 – 5V (2.5mA)
17	LAMP ENABLE #2	Output TTL 0 – 5V (4mA)
2	LAMP OUTPUT #3	Vout range 0 – 5V (2.5mA)
18	LAMP ENABLE #3	Output TTL 0 – 5V (4mA)
3	LAMP OUTPUT #4	Vout range 0 – 5V (2.5mA)
19	LAMP ENABLE #4	Output TTL 0 – 5V (4mA)
33	LAMP OUTPUT GROUND #1	Ground
35	LAMP ENABLE GROUND #2	Ground
4	LAMP OUTPUT #5	Vout range 0 – 5V (2.5mA)
34	LAMP ENABLE #5	Output TTL 0 – 5V (4mA)
20	LAMP OUTPUT #6	Vout range 0 – 5V (2.5mA)
5	LAMP ENABLE #6	Output TTL 0 – 5V (4mA)
21	LAMP OUTPUT #7	Vout range 0 – 5V (2.5mA)
13	LAMP ENABLE #7	Output TTL 0 – 5V (4mA)
6	LAMP OUTPUT #8	Vout range 0 – 5V (2.5mA)
22	LAMP ENABLE #8	Output TTL 0 – 5V (4mA)
37	LAMP OUTPUT GROUND #2	Ground
38	TRIGGER GROUND	Ground
7	TRIG_1_OUT	Output TTL 0 – 5V (8mA)
8	TRIG_1_IN	Input TTL 0 – 5V (only) 49.9K to Ground
23	TRIG_2_OUT	Output TTL 0 – 5V (8mA)
24	TRIG_2_IN	Input TTL 0 – 5V (only) 49.9K to Ground
9	TRIG_3_OUT	Output TTL 0 – 5V (8mA)
39	TRIG_3_IN	Input TTL 0 – 5V (only) 49.9K to Ground
25	TRIG_4_OUT	Output TTL 0 – 5V (8mA)
10	TRIG_4_IN	Input TTL 0 – 5V (only) 49.9K to Ground
40	TRIGGER GROUND	Ground
41	TRIGGER GROUND	Ground
42	LASER POINTER	Output 5V up to 50mA out
43	NOT USED	NOT USED
26	NOT USED	NOT USED
11	NOT USED	NOT USED
27	NOT USED	NOT USED
12	NOT USED	NOT USED
28	NOT USED	NOT USED
13	NOT USED	NOT USED

The Metlogix USB Encoder Interface hardware is required to interface encoders to a system running an M3 software package. The following driver installation procedure must be performed prior to achieving successful communication with the Metlogix USB Encoder Interface Hardware.

1.1 Driver Installation Procedure for the Metlogix USB Encoder Interface

The following procedure applies to 32-bit and 64-bit versions of the Microsoft Windows 7/8/10 /8/10 Operating Systems.

1. Boot the target PC to the Windows 7/8/10 /8/10 desktop.
2. Connect the AC power supply to the Metlogix Interface Hardware.
3. Connect the Metlogix Interface Hardware to the target PC using the supplied USB cable. A device detect sound should be generated by windows indicating a powered device has been detected by windows.
4. If the target PC is connected to the internet, the FTDI interface drivers should be installed automatically from the internet using the Windows 7/8/10 /8/10 driver search mechanism. Otherwise, install manually as described below.
5. Confirm successful installation of the Metlogix interface driver by viewing the Printers and Devices screen, from the start menu in Windows 7/8/10 /8/10. If the device displays with a yellow alert icon, continue to the next step for manual installation of the interface driver. If the device display screen shows the "Metlogix USB 4 Axis Card" device, as seen below, you have successfully completed the Metlogix Interface hardware installation.

Successful Installation

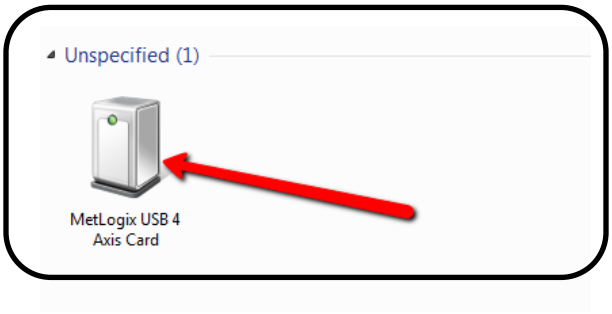

Failed or Incomplete Installation

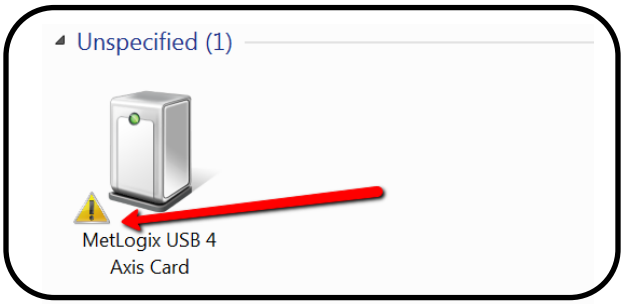

*Images above will indicate "Metlogix USB 3 Axis Card" when connected to 3 axis interface hardware.

1.2 Manual Metlogix Driver Installation

6. In the device screen, or the device manager, right click on the device “Metlogix” and select Update Driver Software.
7. At the next screen select, “Browse my computer for driver software.
8. At the next screen click, “Browse” and point the windows Browse Window to the “FTDI” folder located in your M3 software installation directory.
9. Click OK, and then Next to proceed with loading the driver from the FTDI driver folder.
10. A warning message may appear indicating that Windows is unable to verify the publisher of the driver software. Click on “Install this driver software anyway”.
11. When the installation is complete Windows should indicate that the driver was successfully installed. Click Close.
12. The device should now appear in the Devices and Printers screen under the “Unspecified” category and should be labeled “Metlogix USB 4 Axis Card”. The device is now installed and can be used with the M3 software.

Once the Encoder Interface is successfully installed, the measuring machine’s encoders can be connected to the Metlogix Interface Box. The encoders can then be configured in the M3 software “Axis” settings screen.

Axes Setup settings screen

1. Signal Type
2. Encoder Reference Marks/Startup Zero
3. Encoder Type and Encoder Parameters
4. Encoder Resolution
5. Encoder Direction

Encoder Signal Type is configured in the Axis screen of the M3 settings menu.

Select the encoder signal type that corresponds to the scales you are connecting to the M3 encoder interface box and M3 software. Each axis encoder is configured individually; confirm that the signal type is set correctly for each encoder connected to the system.

Note: Metlogix interface hardware may be configured for use exclusively with TTL or Analog type scale signals. If no scale counts are received in the M3 software, please confirm that the Metlogix hardware support your scale type. Analog interface hardware may be configured for TTL, but not the reverse.

Encoder Resolution is configured in the Axis screen of the M3 settings menu.

Enter the correct encoder resolution for the scales you are connecting to the M3 system. Confirm that the unit type is set correctly for the encoder resolution value you are entering. The encoder resolution for each axis encoder is configured individually. While typically the encoder resolution for a given system is the same for each axis, confirm that the resolution is set correctly for each encoder connected to the system.

For Analog Scale types, confirm the desired interpolation factor for your system. Interpolation factors of 1X, 5X, 10X, and 16X are supported in your Metlogix hardware.

Note: Confirm that the "Units" field, below the encoder resolution field, is configured for the correct unit type for the resolution you have entered. The display resolution in the system has no bearing on the entered resolution value. This value is governed by the setting within this "Units" field.

***Correct encoder resolution settings can be confirmed by placing a "standard size" artifact on the measuring stage and comparing the observed measured value to the stated size of the distance traveled for the encoder axis being checked. The standard and observe values should approximately match. The "simple crosshair" can be positioned on the edge, the axis value in the software "zeroed", and the encoder displacement observed for the known distance travelled.

The following formula can be used to calculate the correct encoder resolution: **(Current Encoder Resolution) X (Stated Size/Observed Size) = Correct Encoder Res.**

Encoder Direction is configured in the Axis screen of the M3 settings menu.

Set the correct scale direction for each encoder axis on the machine by setting the "Reversed" flag to either Yes or No. Scale direction may be different for each axis. Confirm by observing the DRO count direction relative to the stage displacement of your measuring machine. If the count direction is incorrect, toggle the "Reversed" setting from No to Yes, or Yes to No.

Encoder Reference Marks are configured in the Axis screen of the M3 settings menu.

Reference marks may be used to establish a repeatable machine zero needed for NLEC or SLEC error correction, see those sections for details.

If reference marks are used:

For encoders equipped with reference marks, the correct reference mark type must be selected in the “Startup Zero” setup item. If you do not want to use them, select “None” from the “Startup Zero” list.

Encoders equipped with a single reference mark, or (exactly) two reference marks, should select the “One Reference Mark” item in the “Startup Zero” list.

For scales with “Distance coded reference marks” (multiple reference marks), select the “Two Reference Marks” item in the “Startup Zero” list.

For systems being configured for use with AcuRite Encoders, with distance coded reference marks, the “AcuRite Encoder” field should be set to “Yes”. This will ensure that the proper reference mark algorithm is applied for your scales.

Important: Any system being configured for use with distance coded reference marks requires that the correct pitch, fixed increment, and encoder parameters be configured for the scales being used. The manufacturer’s scale specifications should indicate these scale characteristics. Please contact your Metlogix representative for any additional assistance required in configuring these scale parameters.

1.3 Hard Stop machine zero

For systems with or without references marks, a Hard Stop machine zero, or “Home”, position can be established at startup by selecting “Stop” from the “Startup Zero” list.

**When the M3 software loads, any system configured for reference marks, or set for “Stop”, will automatically prompt the user to cross reference marks or to position at machine zero. Additionally, pressing the “Set Machine Zero” button, found in the main settings screen, will initiate a homing sequence, and prompt according to the parameter that is chosen in “Startup zero”.

1.4 Setting machine zero to a specific position

Once reference marks have been configured, a Machine Zero offset can be calculated by pressing the “Use stage position” button from within the Axis setup screen. The Machine Zero offset value will be calculated based on the current stage position and will be displayed in the “Machine offset” field in Encoder Counts.

2 The MLX CNC Interface Module

1. **Internal (MetLogix) amplification**

   - **Circular Plastic Connector**
   - **Phoenix Connector**

2. **Externally supplied amplification (DB44/26/9)**

2.1 Internal Amp

Circular Plastic

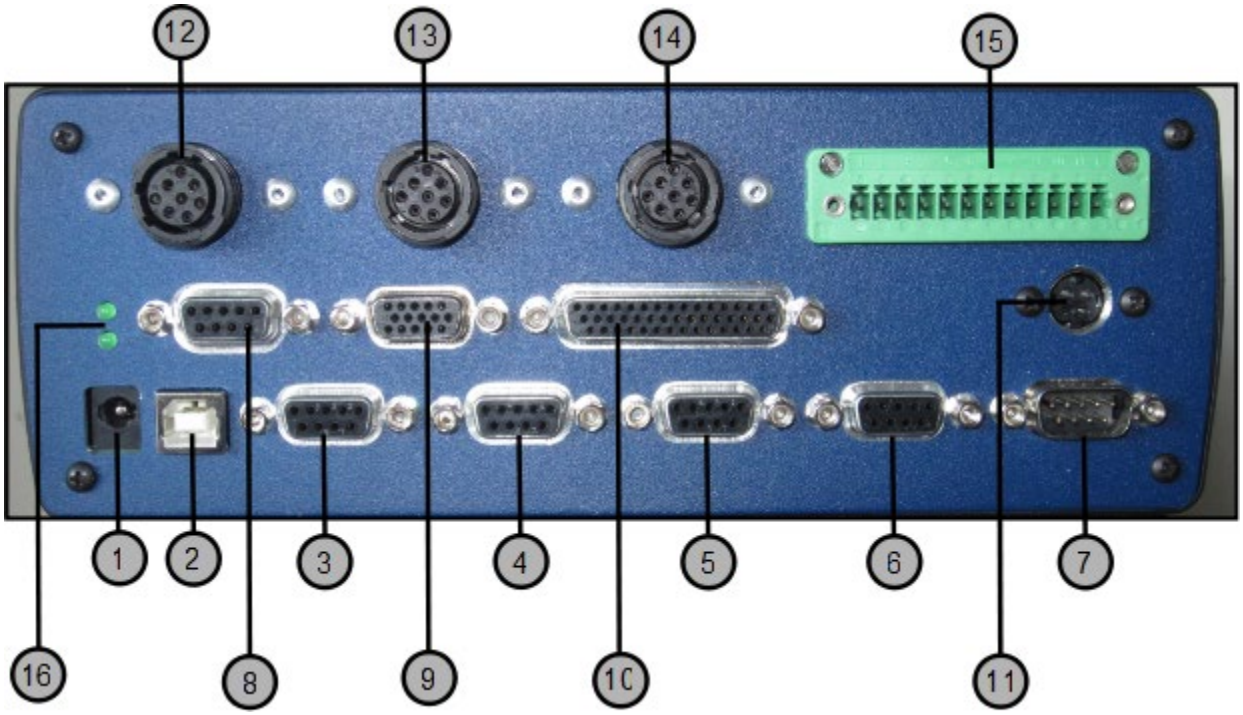

Connector 1

24V DC Power Supply [NOT USED WHEN USING THE CONNECTOR 11 POWER SUPPLY]

Connector 2

USB 2.0 Type B [Connect to PC]

Connectors 3-6

[X/Y/Z/Q] Scale Interface Connectors
9 Pin Dsub [F]

Pin	Description
1	GND
2	A+
3	A-
4	B+
5	B-
6	GND
7	PS +5V
8	Input R+
9	Input R-

Connector 7

Motorized Zoom
9 Pin Dsub [M]

Pin	Description
1	Encoder Input A
2	Limit Switch 1
3	NC
4	VCC
5	Motor Output PWM A
6	Encoder Input B
7	Limit Switch 2
8	GND
9	Motor Output PWM B

Connector 8

Touch Probe Input
9 Pin Dsub [F] [NOT CURRENTLY SUPPORTED, AND SUBJECT TO CHANGE]

Pin	Description
1	TP LED Cathode
2	Screen
3	TP LED Anode
4	TP Circuit In
5	TP Circuit Out
6	NC
7	NC
8	NC
9	NC

Connector 9

Joystick/Trackball/Buttons/Estop
15 Pin High-Density Dsub [F]

Pin	Description
1	Joystick Analog X
2	Joystick Analog Y
3	Joystick Analog Z
4	Joystick Button 1
5	Joystick Button 2
6	Joystick Button 3
7	VCC
8	Emergency Stop
9	GND
10	Trackball XA
11	Trackball XB
12	Trackball YA
13	Trackball XB
14	Trackball ZA
15	Trackball XB

Connector 10

Light Control/Auto Focus/
44 Pin High-Density Dsub [F]

Pin	Description	Pin	Description
1	Lamp 2 Voltage	**23**	Trigger Out 2
2	Lamp 3 Voltage	**24**	Trigger In 2
3	Lamp 4 Voltage	**25**	Trigger Out 4
4	Lamp 5 Voltage	**26**	NC
5	Lamp 6 Enable	**27**	NC
6	Lamp 8 Voltage	**28**	NC
7	Trigger Out 1	**29**	NC
8	Trigger In 1	**30**	NC
9	Trigger Out 3	**31**	Lamp 1 Enable
10	Trigger In 4	**32**	GND
11	NC	**33**	GND
12	NC	**34**	Lamp 5 Enable
13	NC	**35**	GND
14	NC	**36**	Lamp 7 Enable
15	NC	**37**	GND
16	Lamp 1 Voltage	**38**	GND
17	Lamp 2 Enable	**39**	Trigger In 3
18	Lamp 3 Enable	**40**	GND
19	Lamp 4 Enable	**41**	GND
20	Lamp 6 Voltage	**42**	Laser Pointer
21	Lamp 7 Voltage	**43**	NC
22	Lamp 8 Enable	**44**	NC

Connector 11

Power Supply

External power supply 24 VDC (18..30 VDC)
Current typical 300 mA / max. 1.0 A @ 24 VDC with 5 encoders à 100 mA

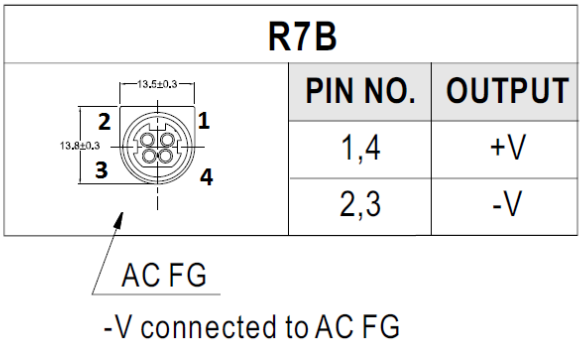

Connector 12-14

[X/Y/Z] Motor Input
8 Pin Circular Plastic [F]

Pin	Description
1	Phase A
2	Phase B’
3	Phase B
4	Phase A’
5	Shield
6	Negative Limit
7	Positive Limit
8	Limit Ground

Connector 15

[X/Y/Z] Motor Limit Switch I/O
12 Phoenix [F]

Pin	Description
1	X GND
2	X +5V VCC
3	X Limit 1
4	X Limit 2
5	Y GND
6	Y +5V VCC
7	Y Limit 1
8	Y Limit 2
9	Z GND
10	Z +5V VCC
11	Z Limit 1
12	Z Limit 2

LED USB Status Indicator 16

Status (Top) LED	Power (Bottom) LED
ON = USB OK	Illuminated = ON
Blink = USB Disconnected	
Flash (Fast) = MLX Bootloader Mode	

Encoder Interface Board

(Connectors 1-7 from diagram above)

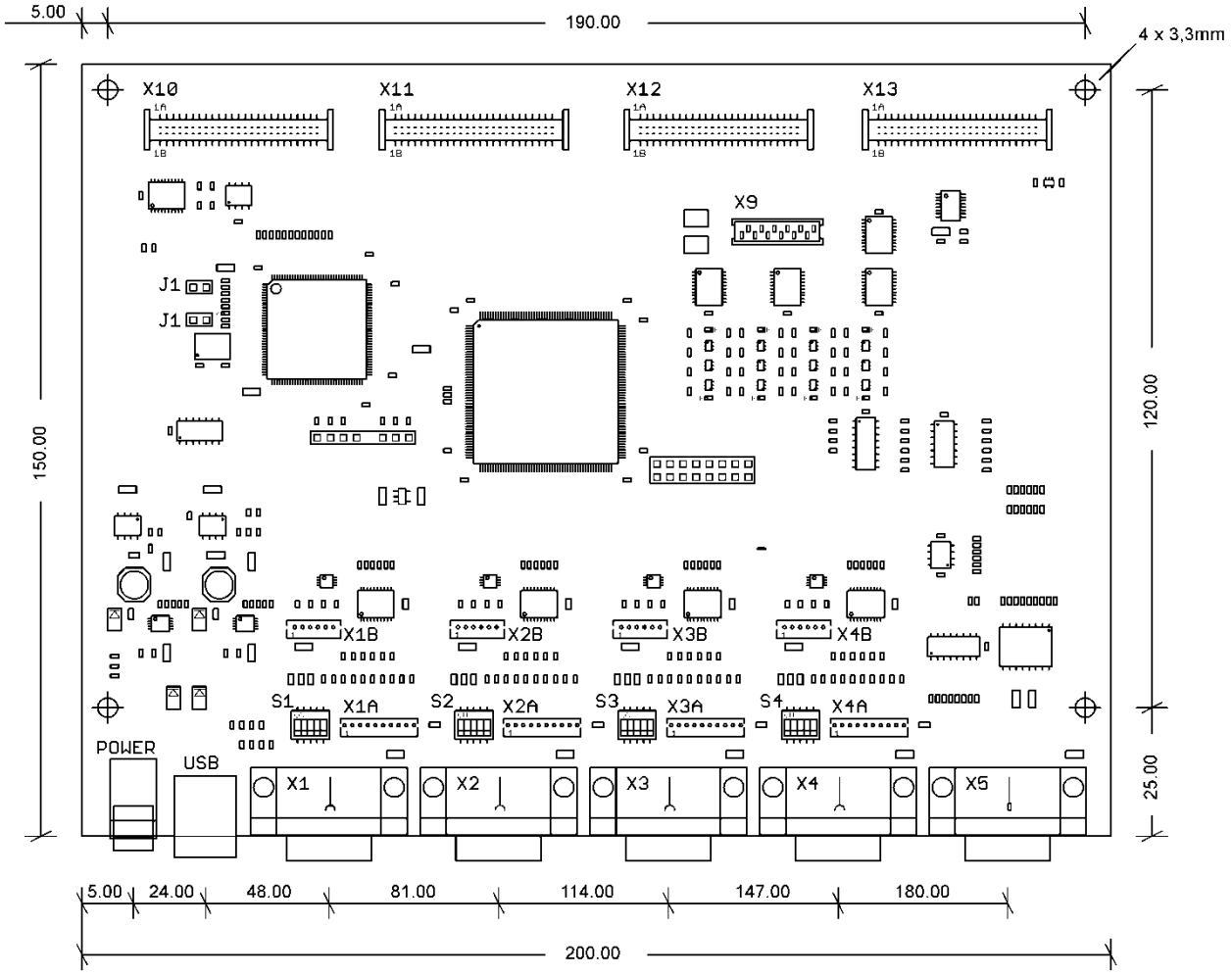

I/0 "Joy/Lamp/Probe/Edge" Board

(Connectors 8, 9, and 10 from diagram above)

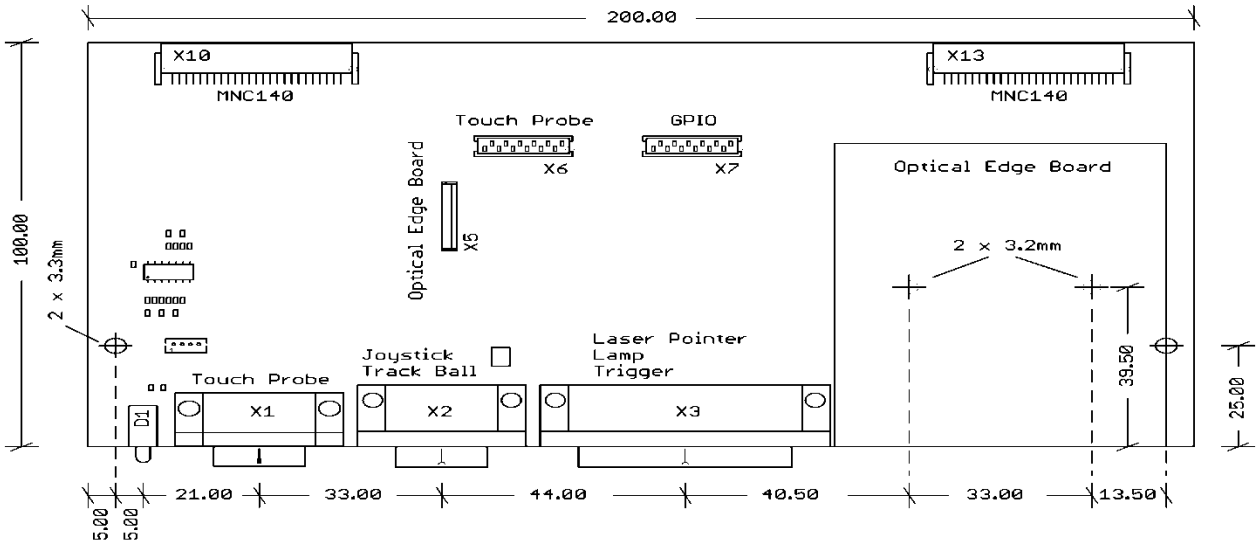

Amplifier Interface Board

(Either Circular Plastic Adapters or Phoenix Connectors)

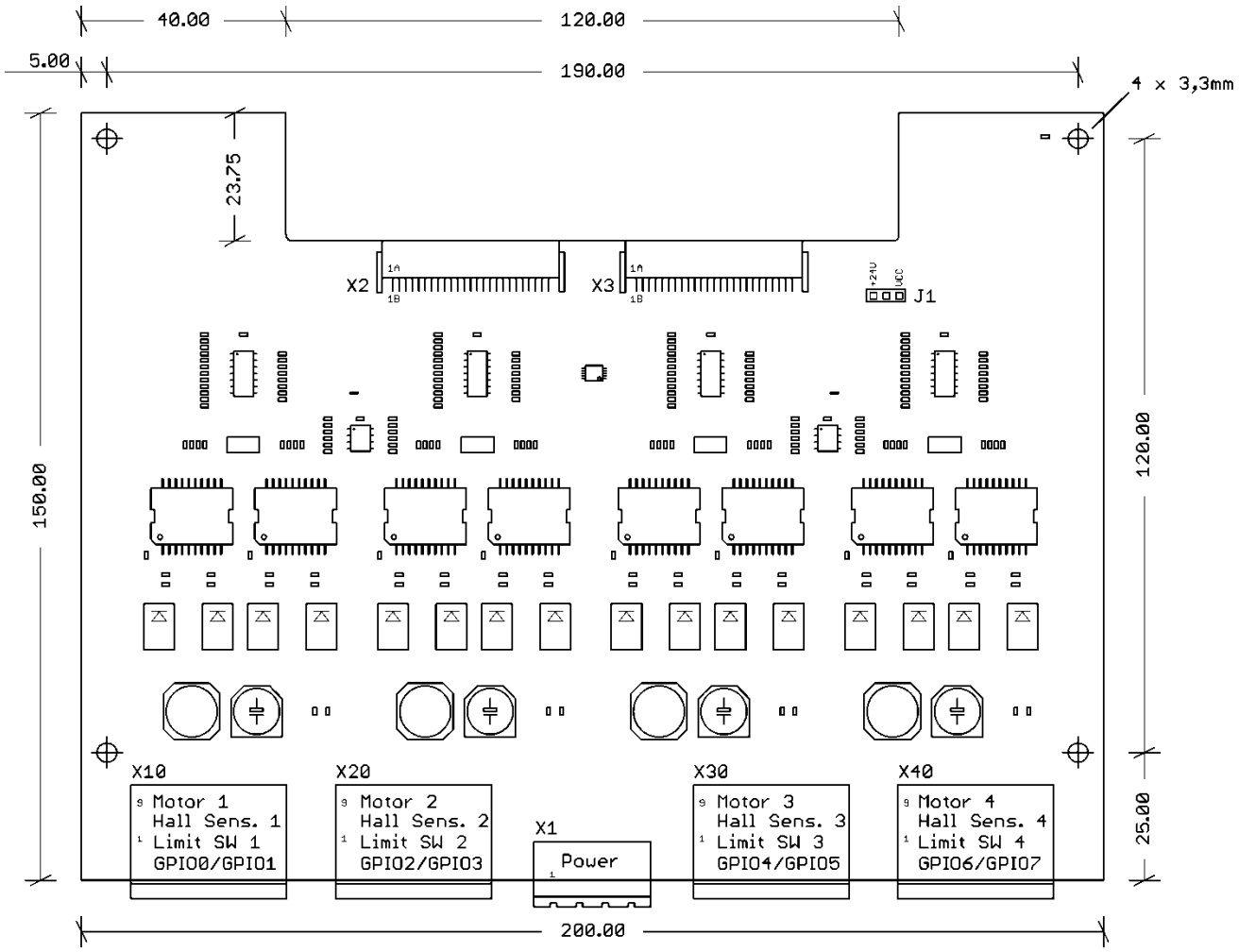

Phoenix Connector

The M3 CNC interface is also available with Phoenix connectors in place of circular plastic. For this case the Motor Connection, Limit Switch connection, and Power Supply connection are all accessed via the connectors seen below.

The Phoenix connector interface utilizes the same three component board system as the Circular Plastic interface described in the previous section. See applicable board diagrams on the previous 2 pages

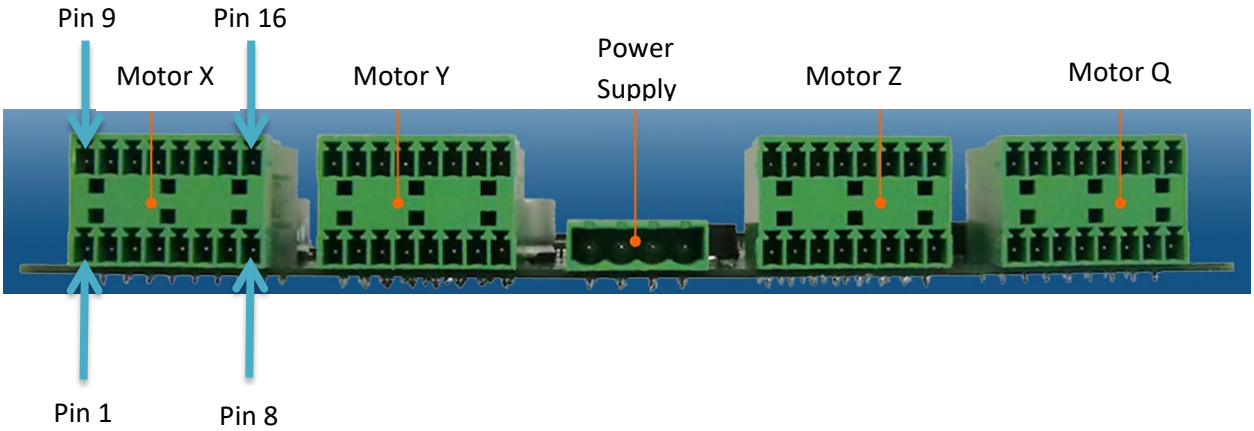

Pin	Signal			
	Header X10 Motor X	**Header X20 Motor Y**	**Header X30 Motor Z**	**Header X40 Motor Q**
1	PWM A	PWM A	PWM A	PWM A
2	PWM B	PWM B	PWM B	PWM B
3	PWM C	PWM C	PWM C	PWM C
4	PWM D	PWM D	PWM D	PWM D
5	GND	GND	GND	GND
6	Limit Switch 1	Limit Switch 1	Limit Switch 1	Limit Switch 1
7	Limit Switch 2	Limit Switch 2	Limit Switch 2	Limit Switch 2
8	GND	GND	GND	GND
9	GND	GND	GND	GND
10	VCC	VCC	VCC	VCC
11	Pins 11, 12 and 13 are RESERVED			
12				
13				
14	GND	GND	GND	GND
15	GPIO 0	GPIO 2	GPIO 4	GPIO 6
16	GPIO 1	GPIO 3	GPIO 5	GPIO 7

Pin	Signal
1	GND
2	GND
3	Power supply +24VDC
4	Power supply +24VDC

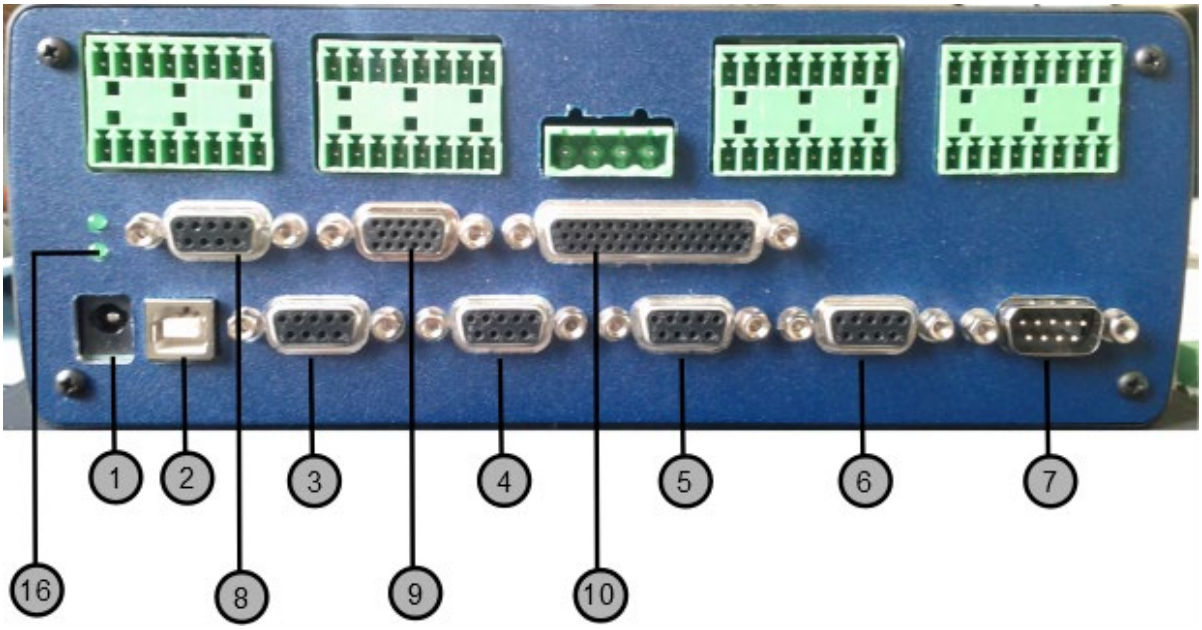

Connector 1

24V DC Power Supply [NOT USED WHEN USING THE 4-PIN PHOENIX POWER CONNECTOR SEEN ABOVE.]

Connector 2

USB 2.0 Type B [Connect to PC]

Connectors 3-6

[X/Y/Z/Q] Scale Interface Connectors
9 Pin Dsub [F]

Pin	Description
1	GND
2	A+
3	A-
4	B+
5	B-
6	GND
7	PS +5V
8	Input R+
9	Input R-

Connector 7

Motorized Zoom
9 Pin Dsub [M]

Pin	Description
1	Encoder Input A
2	Limit Switch 1
3	NC
4	VCC
5	Motor Output PWM A
6	Encoder Input B
7	Limit Switch 2
8	GND
9	Motor Output PWM B

Connector 8

Touch Probe Input
9 Pin Dsub [F]
[NOT CURRENTLY SUPPORTED,
AND SUBJECT TO CHANGE]

Pin	Description
1	TP LED Cathode
2	Screen
3	TP LED Anode
4	TP Circuit In
5	TP Circuit Out
6	NC
7	NC
8	NC
9	NC

Connector 9

Joystick/Trackball/Buttons/Estop
15 Pin High-Density Dsub [F]

Pin	Description
1	Joystick Analog X
2	Joystick Analog Y
3	Joystick Analog Z
4	Joystick Button 1
5	Joystick Button 2
6	Joystick Button 3
7	VCC
8	Emergency Stop
9	GND
10	Trackball XA
11	Trackball XB
12	Trackball YA
13	Trackball XB
14	Trackball ZA
15	Trackball XB

Connector 10

Light Control/Auto Focus
44 Pin High-Density Dsub [F]

Pin	Description	Pin	Description
1	Lamp 2 Voltage	**23**	Trigger Out 2
2	Lamp 3 Voltage	**24**	Trigger In 2
3	Lamp 4 Voltage	**25**	Trigger Out 4
4	Lamp 5 Voltage	**26**	NC
5	Lamp 6 Enable	**27**	NC
6	Lamp 8 Voltage	**28**	NC
7	Trigger Out 1	**29**	NC
8	Trigger In 1	**30**	NC
9	Trigger Out 3	**31**	Lamp 1 Enable
10	Trigger In 4	**32**	GND
11	NC	**33**	GND
12	NC	**34**	Lamp 5 Enable
13	NC	**35**	GND
14	NC	**36**	Lamp 7 Enable
15	NC	**37**	GND
16	Lamp 1 Voltage	**38**	GND
17	Lamp 2 Enable	**39**	Trigger In 3
18	Lamp 3 Enable	**40**	GND
19	Lamp 4 Enable	**41**	GND
20	Lamp 6 Voltage	**42**	Laser Pointer
21	Lamp 7 Voltage	**43**	NC
22	Lamp 8 Enable	**44**	NC

2.2 External Amplifier

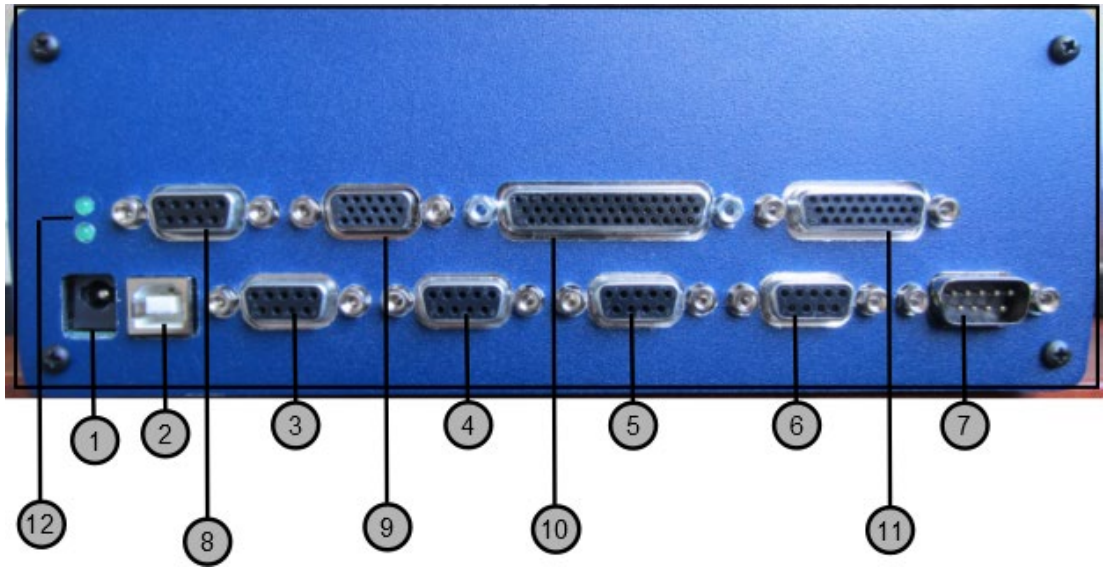

Connector 1

24V DC Power Supply

Connector 2

USB 2.0 Type B [Connect to PC]

Connectors 3-6

[X/Y/Z/Q] Scale Interface Connectors
9 Pin Dsub [F]

Pin	Description
1	GND
2	A+
3	A-
4	B+
5	B-
6	GND
7	PS +5V
8	Input R+
9	Input R-

Connector 7

Motorized Zoom
9 Pin Dsub [M]

Pin	Description
1	Encoder Input A
2	Limit Switch 1
3	NC
4	VCC
5	Motor Output PWM A
6	Encoder Input B
7	Limit Switch 2
8	GND
9	Motor Output PWM B

Connector 8

Touch Probe Input
9 Pin Dsub [F]

Pin	Description
1	TP LED Cathode
2	Screen
3	TP LED Anode
4	TP Circuit In
5	TP Circuit Out
6	NC
7	NC
8	NC
9	NC

Connector 9

Joystick/Trackball/Buttons/Estop
15 Pin High-Density Dsub [F]

Pin	Description
1	Joystick Analog X
2	Joystick Analog Y
3	Joystick Analog Z
4	Joystick Button 1
5	Joystick Button 2
6	Joystick Button 3
7	VCC
8	Emergency Stop
9	GND
10	Trackball XA
11	Trackball XB
12	Trackball YA
13	Trackball XB
14	Trackball ZA
15	Trackball XB

Connector 10

Light Control/Auto Focus/
44 Pin High-Density Dsub [F]

Pin	Description	Pin	Description	Pin	Description
1	Lamp voltage 2	**16**	Lamp voltage 1	**31**	Lamp enable 1
2	Lamp voltage 3	**17**	Lamp enable 2	**32**	GND
3	Lamp voltage 4	**18**	Lamp enable 3	**33**	GND
4	Lamp voltage 5	**19**	Lamp enable 4	**34**	Lamp enable 5
5	Lamp enable 6	**20**	Lamp voltage 6	**35**	GND
6	Lamp voltage 8	**21**	Lamp voltage 7	**36**	Lamp enable 7
7	Trigger Out 1	**22**	Lamp enable 8	**37**	GND
8	Trigger In 1	**23**	Trigger Out 2	**38**	GND
9	Trigger Out 3	**24**	Trigger In 2	**39**	Trigger In 3
10	Trigger In 4	**25**	Trigger Out 4	**40**	GND
11	Axis X – Limit switch 2	**26**	Axis X – Limit switch 1	**41**	GND
12	Axis Y – Limit switch 2	**27**	Axis Y – Limit switch 1	**42**	Laser pointer
13	Axis Z – Limit switch 2	**28**	Axis Z – Limit switch 1	**43**	NC
14	NC	**29**	NC	**44**	NC
15	NC	**30**	NC	**Chassis**	Screen

Connector 11

CNC Amplifier Interface
26 Pin Dsub [F]

Pin	Signal
1	Axis X – Servo GND respectively Stepper direction (0-5V TTL)
2	Axis Y – Servo GND respectively Stepper direction (0-5V TTL)
3	Axis Z – Servo GND respectively Stepper direction (0-5V TTL)
4	Joystick analog Y
5	Joystick +12 V
6	Joystick switch 2
7	Trackball XB
8	Trackball YB
9	Trackball ZB
10	Axis X – Servo out ±10 V respectively Stepper clock out
11	Axis Y – Servo out ±10 V respectively Stepper clock out
12	Axis Z – Servo out ±10 V respectively Stepper clock out
13	Joystick analog X
14	Joystick analog Z
15	Joystick switch 1
16	Trackball XA
17	Trackball YA
18	Trackball ZA
19	Reset
20	TTL OUT
21	GND
22	GND
23	Joystick VCC
24	Joystick switch 3
25	Joystick VCC
26	GND

12 LED USB Status Indicator

Status (Top) LED	Power (Bottom) LED
On = USB OK	Illuminated = On
Blink = USB Disconnected	
Flash (Fast) = MLX Bootloader Mode	

Encoder Interface Board

(Connectors 1-7 from diagram above)

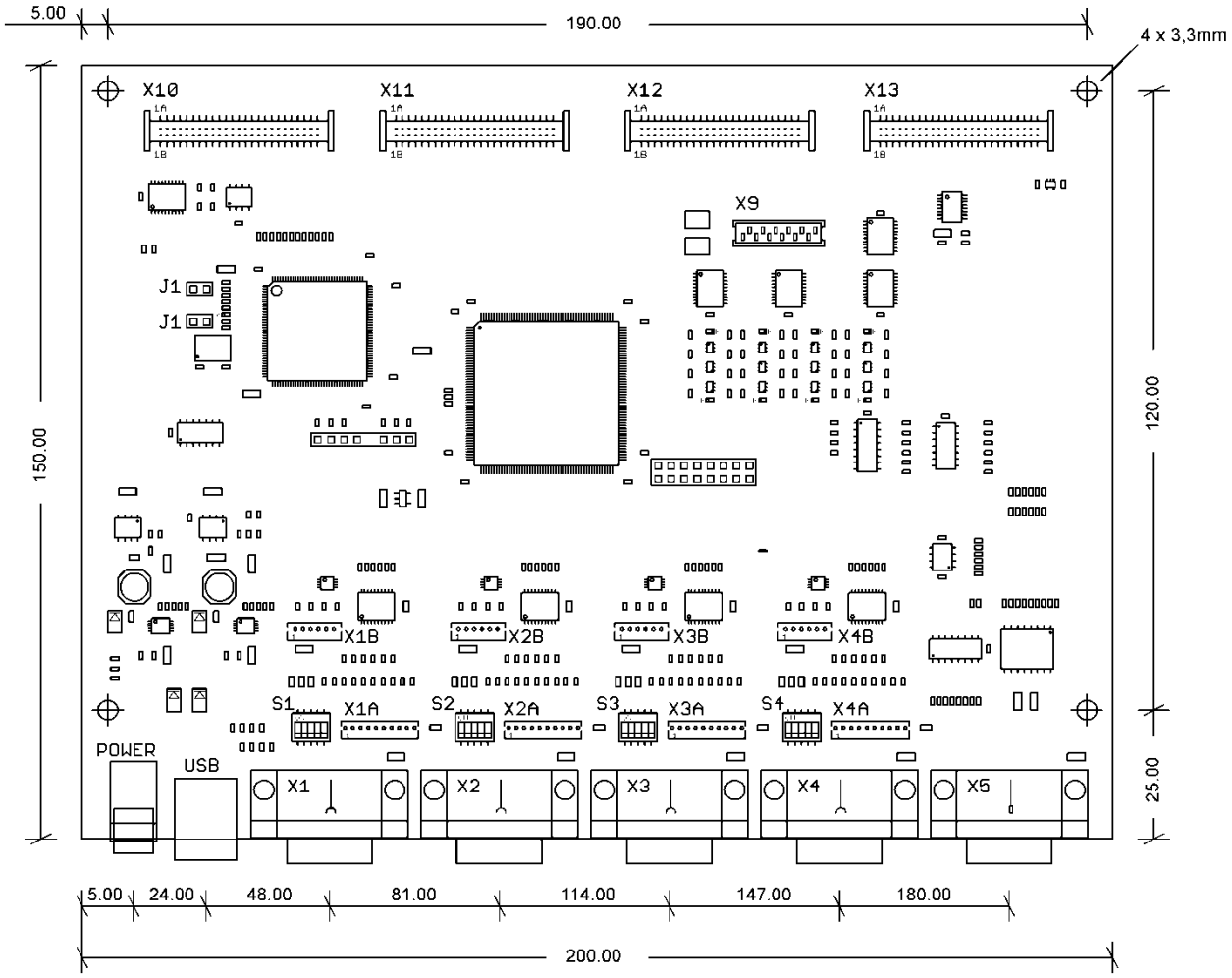

I/0 “Joy/Lamp/Probe/Edge/CNCIO” Board

(Connectors 8-11 from diagram above)

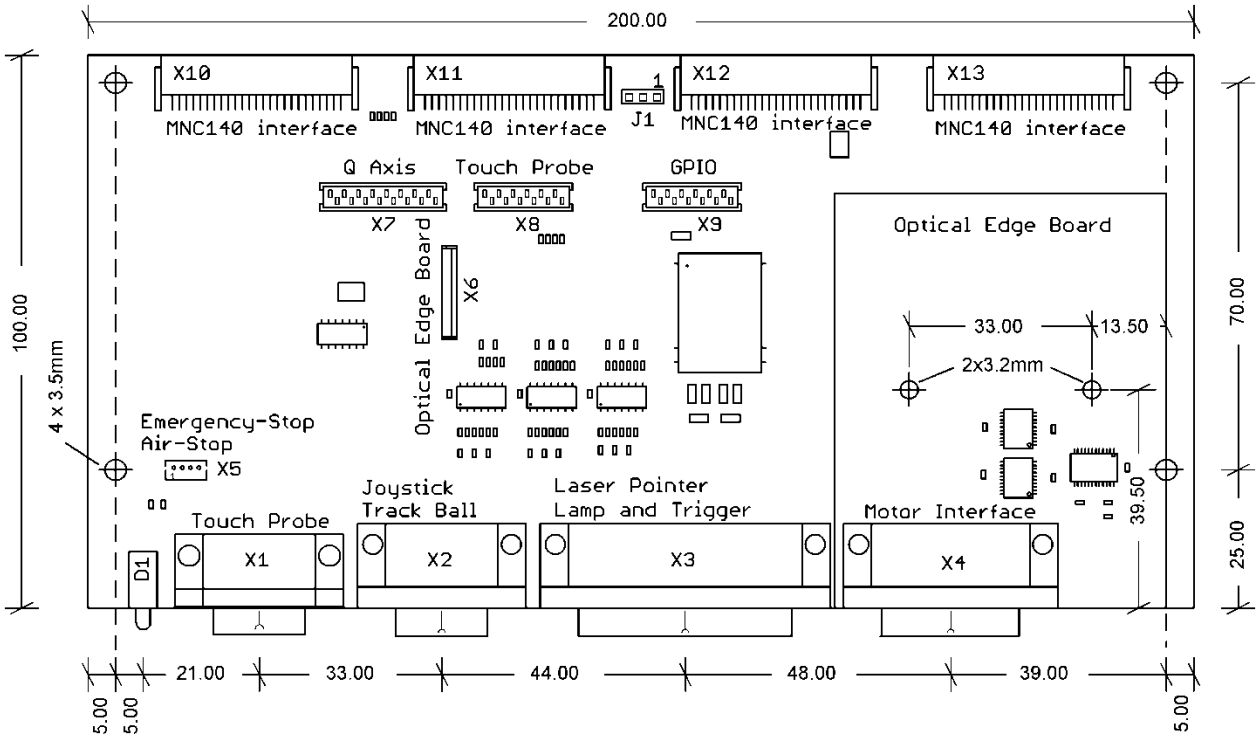

3 Metlogix CNC Interface Driver Installation

IMPORTANT: The following driver installation process must be completed prior to communicating with the Metlogix CNC Interface Hardware. Communication with the Mxcncoptions program, and the M3 software, require that the MNC140 driver be successfully installed.

The following procedure applies to 32 and 64 bit versions of the Microsoft Windows 7/8/10 /8/10 Operating System.

1. Boot the target PC to the Windows 7/8/10 /8/10 desktop.
2. Connect the proper DC power supply to the Metlogix CNC Interface Hardware.
3. Connect the Metlogix CNC Interface Hardware to the target PC using the supplied USB cable. A device detect sound should be generated by windows indicating a powered device has been detected by windows.
4. The Driver Installation process will fail, and Windows will display a message indicating such.
5. Click the Windows 7/8/10 Start Menu and select “Devices and Printers”.
6. Within the devices and printers screen the item “MNC140” will appear with a yellow “alert” indicator as seen below.

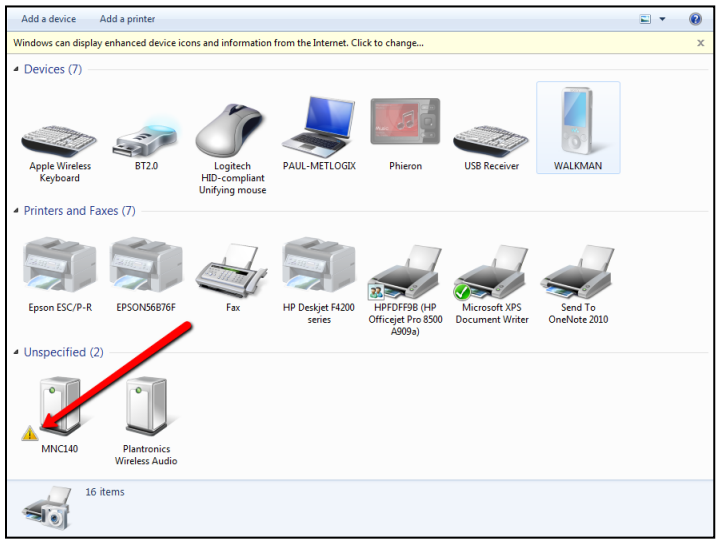

7. Double Click on the “MNC140” item and select the Hardware tab from the dialog window.
8. Press the Properties button displayed the lower right corner of the Hardware dialog.
9. Click the button “Change Settings”. Press the “Update Driver” button from the MNC140 Properties dialog.
10. A windows dialog will appear offering two choices. Select “Browse my computer for driver software”.
11. Point the windows browser dialog to the folder found in the M3 installation directory called “MNCDRIVER”. Choose the correct folder for either 32bit or 64bit Windows Operating System.
12. Click “Next” to begin the driver installation. If prompted, click the “Install” button from the Windows Security Warning dialog.
13. When complete a dialog should appear indicating successful installation. Successful installation can be confirmed by ensuring that the yellow “alert” indicator no longer appears on the MNC140 device in the Devices and Printers screen.

3.1 Mxcncoptions

The mxcncoptions program is used to specify most of the parameters required for successful configuration and tuning of the CNC motion control system. Each machine axis is configured individually, using the Axis selector buttons seen below. The CNC terms and settings fields for each axis are the same for all three axis, though the specific values entered may vary.

The setup parameters specified can be stored directly to the Interface Module (Save To Flash) and can also be saved to a backup parameter file (x.par). These parameter files can be loaded at any time with the mxcncoptions application to restore these saved parameter settings.

The file mxcncoptions.exe is used to launch the mxcncoptions application.

Stepper Motor Configuration

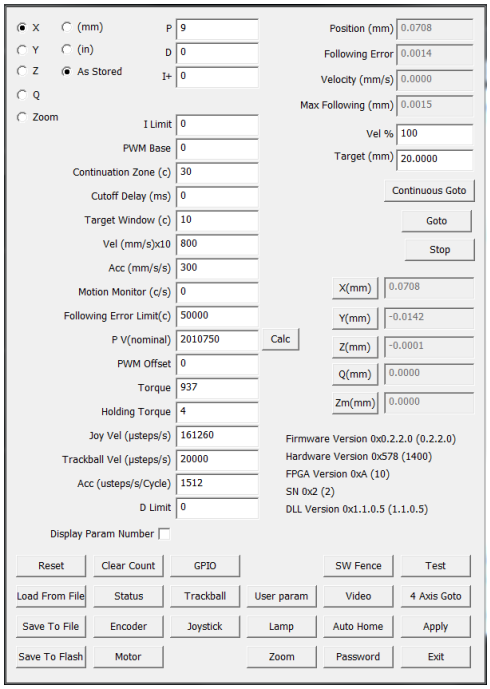

Servo Motor Configuration

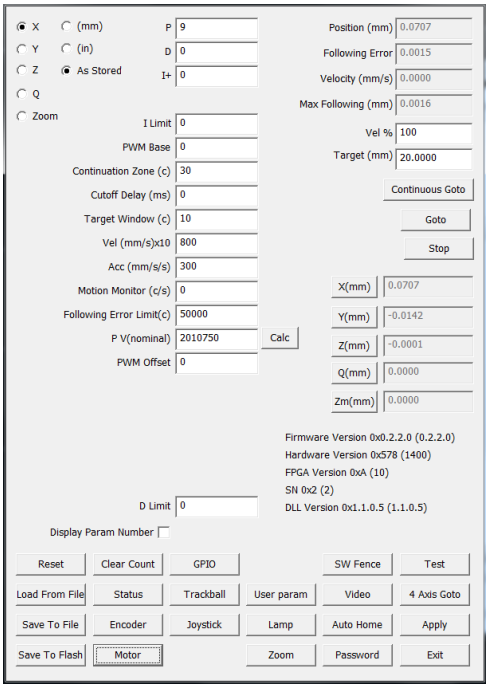

3.2 Motion Parameters

Velocity

Enter the desired maximum velocity into the "*Vel (mm/s)"* field for the selected axis. Velocity is the rate of change in position for a given axis.

Acceleration

Enter the desired acceleration into the "*Acc (mm/s/s)"* field for the selected axis. Acceleration is the rate of change in velocity. Acceleration refers to how quickly velocity increases.

Following Error Limit

Enter the desired following error limit into the "*Following Error Limit (c)"* field for the selected axis. Following Error is the difference between the actual position and the expected position during axis travel. Following error limit is the largest error allowed. If the error returned at any point during axis travel is greater than the following error limit, motion is inhibited for this axis and a following error is triggered.

Continuation Zone

Enter the desired continuation zone size into the "*Continuation Zone (c)"* field for the selected axis. The Continuation Zone is the linear distance, in the direction of stage travel, from the actual position to the loop finish position. If the actual position is within the continuation zone, the M3 CNC drive loop is completed.

Proportional Factor

Enter the desired proportional factor into the "*P"* field for the selected axis. Proportional Factor refers to the voltage output to the amplifier box in proportion to the amount of positional error that exists. The proportional factor is multiplied by the positional error to determine the output voltage.

Some effects of Proportional

Typically, if the proportional factor is set too low the final position will fall short of the target position. If the proportional factor is too high, oscillation can occur. This is because the output voltage produces a greater movement than required to reach the target position. As a result, the proportional factor outputs a voltage to push the axis back towards the target. This back-and-forth movement can appear as oscillation in the stage. This oscillation can typically be reduced or removed by decreasing the derivative factor, or by increasing the proportional factor.

Derivative Factor

Enter the desired derivative factor into the "*D"* field for the selected axis. Derivative Factor refers to the voltage output to the amplifier box equal to the rate of change in positional error, multiplied by the derivative factor. Derivative factor yields a voltage that is opposite in sign to the slope of the error curve. Typically, this means that the derivative factor outputs a voltage that subtracts from the sum of the proportional and integral factors. For this case derivative can be thought to provide a "damping" effect to axis travel.

Some effects of Derivative

If the derivative factor is set too high or too low, axis movement can appear "jerky" or unstable. This effect is most noticeable on systems with high magnification video images. Over-damping occurs when the derivative factor is too high. This can cause high frequency oscillation, often including a chattering sound from the motor. Applying derivative factor may also have the effect of reducing the fine positioning of a system. For this case, Integral Factor can be applied to compensate for impact on fine positioning.

Integral Factor

Enter the desired integral factor into the "*I"* field for the selected axis. Integral Factor refers to the voltage output to the amplifier equal to the sum of all positional error accumulated from that axis, multiplied by the integral factor. The output voltage from the integral factor is limited by the integral limit.

Some effects of Integral

As noted above, integral factor can provide some fine positioning compensation for the effects of increased derivative. Integral factor can also help compensate for friction on a given axis. If an axis is stopped in an area of high friction, increased proportional may be required to overcome that friction, enabling motion in that axis. Large derivative can build during this period and positional error may grow as well, lending to this increase in derivative. The integral factor can be applied to offset the buildup of the derivative thus assisting the proportional factor in moving that axis. Large amounts of integral factor and its associated integral limit may also cause the axis to oscillate. Typically, oscillation related to integral factor and integral limit is characterized by low frequency noise, and significant amounts of positional instability around the target position.

Integral Limit

Enter the desired integral limit into the "I Limit" field for the selected axis. Integral Limit refers to the maximum output voltage, pulse, or frequency that can result from the integral factor. The output from the Integral Factor will never exceed the integral limit.

PV Nominal

Enter the desired PV Nominal value into the "P V(nominal)" field for the selected axis. PV Nominal is specified differently depending on whether Stepper motors or DC Servo Motors are being used. For stepper motors PV Nominal is described as the number of micro-steps per meter for the axis being configured. This calculation will be based on the Lead Pitch of the axis screw being used, the number of micro-steps/step of the motor, and the number of steps/revolution of the motor. For servo motors the PV Nominal is described as the voltage output of the motor at maximum velocity, for a "zero load" axis move.

Calculating “PV Nominal” for Stepper systems

The PV nominal can automatically be calculated for stepper motors by using the mxcncoptions “Calc” screen. Open the “Calc” screen by pressing the “Calc” button from the main mxcncoptions page. Enter the lead pitch, microsteps/step, and steps/revolution for the lead screw and motor being used. Press the “Calc” button at the bottom of the calc dialog and copy the calculated number for PV nominal into the PV nominal field in the main mxcncoptions screen.

Torque

Enter the desired Torque value into the “Torque” field for the selected axis. Torque describes the relationship between velocity and current. Effectively, in order to move the stage at a higher speed the current through the motor needs to increase. In many traditional amplification systems, the current is kept the same throughout the velocity curve. In the Metlogix CNC system slow speed moves assume that less current is required to achieve the move. The entered torque value should achieve the target current at the target velocity.

Calculating “Torque” for Stepper systems

The torque can automatically be calculated for stepper motors by using the mxcncoptions “Calc” screen. Open the “Calc” screen by pressing the “Calc” button from the main mxcncoptions page. Enter the lead pitch, micro-steps/step, and steps/revolution for the lead screw and motor being used. Press the “Calc” button at the bottom of the calc dialog and copy the calculated number for torque into the torque field in the main mxcncoptions screen.

Holding Torque

Enter the desired Holding Torque into the “Holding Torque” field, as a percentage (0-20%) of total torque, for the selected axis. This specifies how much of the total torque will be applied by a stepper system to hold the current position of a given axis at rest. This applies to both the current that is running through windings while the stage is holding position, and the starting point for the current that will start the move. When holding torque is too low the motor may stall at very slow speeds, during the acceleration stage. Typically, values of 1% to 2% are adequate in standard stepper systems.

PWM Base

Enter the desired PWM Base value into the “PWM Base” field for the selected axis. The PWM Base value is specified as a percentage of maximum duty time. The PWM Base parameter applies mainly for systems that have a specified dead band in the middle of their amplifier, where no movement occurs. The PWM Base will effectively disable the PWM output until the base value is reached at either the positive or negative side of the output. As an example, the PWM Base could be used to turn off an amplifier when the output voltage is inside of +/- 1 volt. This allows the output to start at +/- (X) volts and move up. Thus, the above case would state that for 1 count of error, the output would be +1 volt + (p*1), and with negative 1 count of error the output would be -1 volt +(p *-1).

PWM Offset

Enter the desired PWM Offset, as a percentage, into the “PWM Offset” field for the selected axis. Typically, when a system reaches target position “exactly”, the motor output is fully disabled for the period it remains within the specified target window. For some cases of non-counter balanced Z axis assemblies, and stages with low friction transport systems, this can be problematic. This percentage value will be of the total voltage, frequency, or PWM output required to reach the precise target position and will be applied for the period the machine remains within the specified target window.

Cutoff Delay

Enter the desired Cutoff Delay into the “Cutoff Delay” field for the selected axis. This value specifies the amount of time that the system must be within the Target Window before the PWM offset is applied. The delay can be thought as a form of “dwell timer” for the PWM offset.

Target Window

Enter the desired Target Window value, in the selected units, into the “Target Window(c)” field for the selected axis. The Target Window specifies the linear distance, away from the precise target position, where the motor outputs are fully disabled. This area around a specific target position defines the zone where PWM offset can be applied.

PID element (parameters P0xx for axis X)

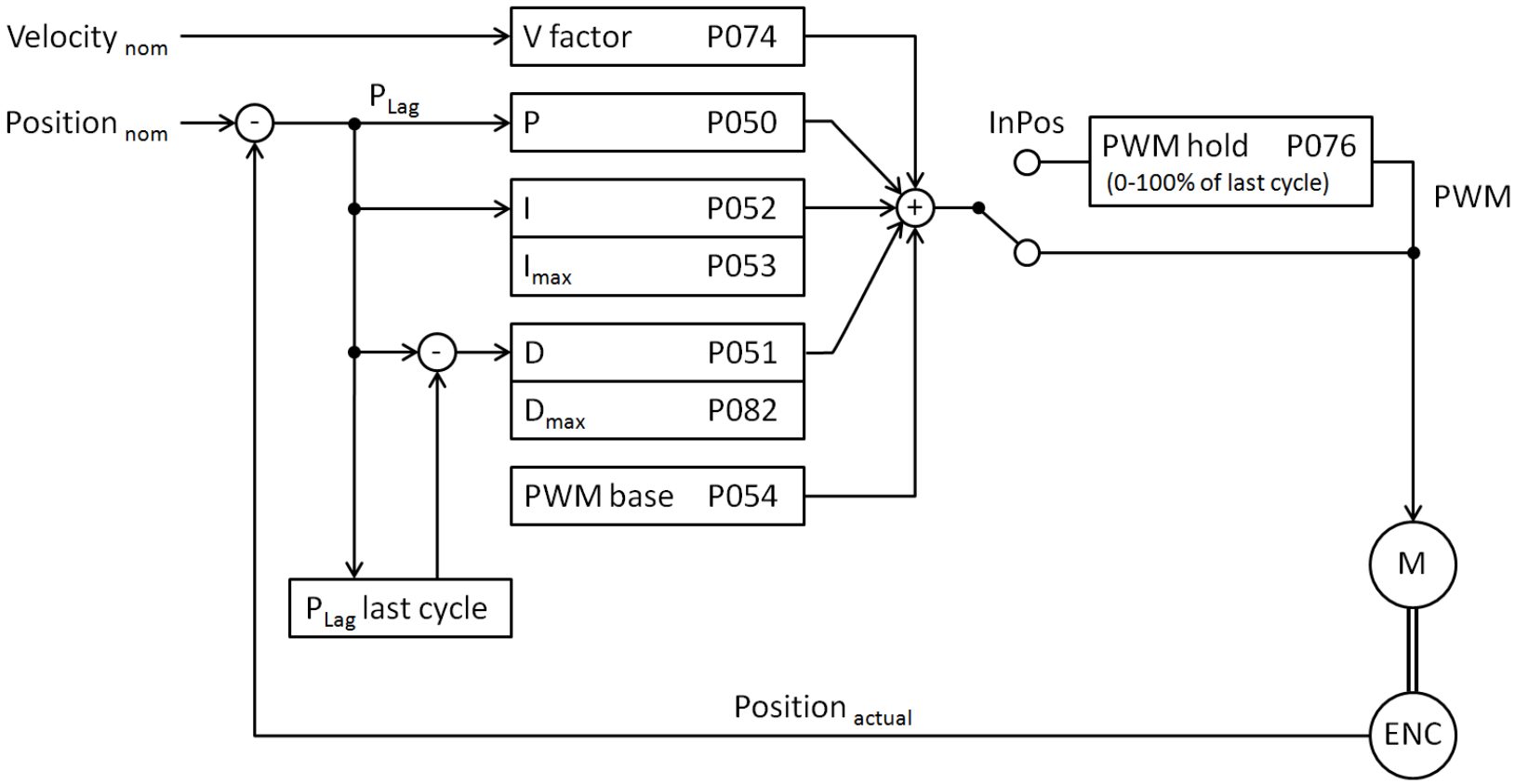

3.3 Buttons and Setup Screens

Reset – Performs a reset to the currently stored parameters within the flash storage in the CNC hardware.

Load from File- Calls the dialog window to load a previously saved mxcncoptions parameter file (.par).

IMPORTANT: When loading a previously saved parameter file, the settings will only be applied as long as the CNC hardware is powered on. For settings to be permanently applied, you must perform a "Save to Flash".

Save to File- Calls the dialog window to save the currently configured parameters to an mxcncoptions parameter file (.par).

Save to Flash- Stores the currently configured parameters in the flash memory within the CNC interface hardware.

IMPORTANT: When making changes to the parameters within the Motor setup screen, always perform a Save to Flash, close the mxcncoptions program, cycle power to the CNC hardware, and then rerun mxcncoptions.

Clear Count- Sets the current position for each axis DRO to 0.

Status- Opens the CNC system status dialog. The error indication seen in this screen is for the purpose of identifying error states within the CNC hardware system. Many reported errors are not self-clearing, when changes are made to resolve error states, use the Clear Encoder Errors button, seen below to reset the error display.

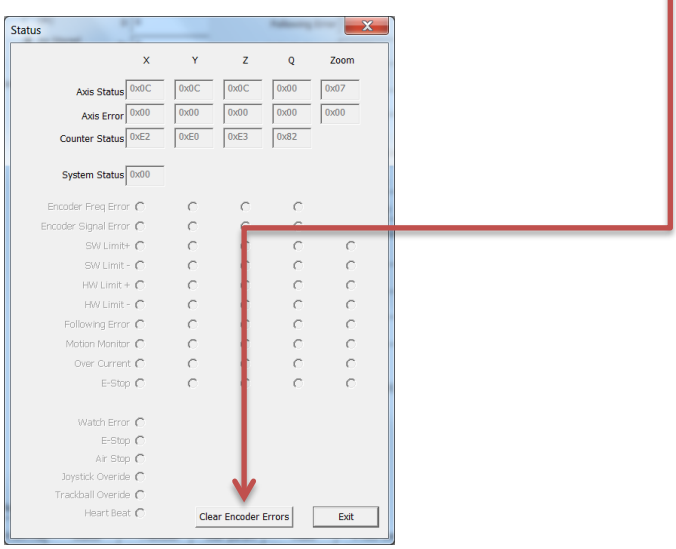

Encoder- Opens the Encoder setup dialog window. Settings are configured axis by axis. Use the Axis Selection buttons to choose the axis whose axis information will be displayed. NOTE: The four parameters at the bottom of the screen are read-only and are displayed for informational purposes only.

Interpolation- Set the interpolation factor used for Analog Signal types.

Signal Type- Set the Signal Type for the Encoder being used.

Resolution- Set the resolution for the scale type being used.

Encoder Increment- (Reference Mark Setting)- Set the grating increment for the encoder being used.

Encoder Pitch- (Reference Mark Setting)- Set the grating pitch for the encoder being used.

Count Direction- Set the encoder count direction for the encoder being used.

TTL Ref Mark Inversion- Set the reference mark detection direction for ttl scale types only.

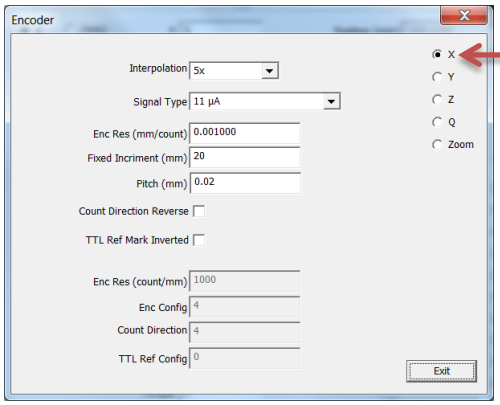

Motor- Opens the Motor setup screen. Settings are configured axis by axis. Use the Axis Selection buttons to choose the axis whose axis motor information will be displayed.

Motor Type- Set the motor type being used for the selected axis. Select from Stepper Motor, DC Brushless, DC Brushed, Open Loop Stepper, or Motor Disabled settings.

Motor Reversed- Set the motor direction for the selected axis. Check the selection box to reverse the current motor direction. Proper motor direction will be a function of the currently set encoder count direction.

Swap Limits- Invert the current Limit direction for Limit Switch Detection.

Active Low Limit – Toggles the limit switches active state between Low and High.

Current Limit- The specified value(milliamps) will disable motor out when reached.

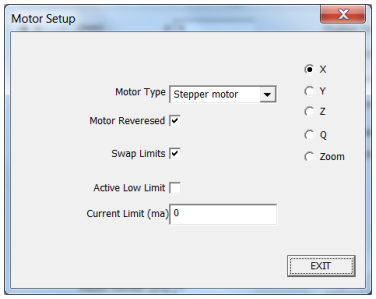

IMPORTANT: When making changes to the parameters within the Motor setup screen, always perform a Save to Flash, close the mxcncoptions program, cycle power to the CNC hardware, and then rerun mxcncoptions.

GPIO- Displays the GPIO status/test screen and indicates the current state of the General Purpose Input and Output lines. This screen can also be used to test the functionality of the input and output lines by specifying a line state and direction. I/O designations are only set for the period of time that the CNC hardware is powered on. These are for testing purposes only.

Trackball- Displays the Trackball setup screen.

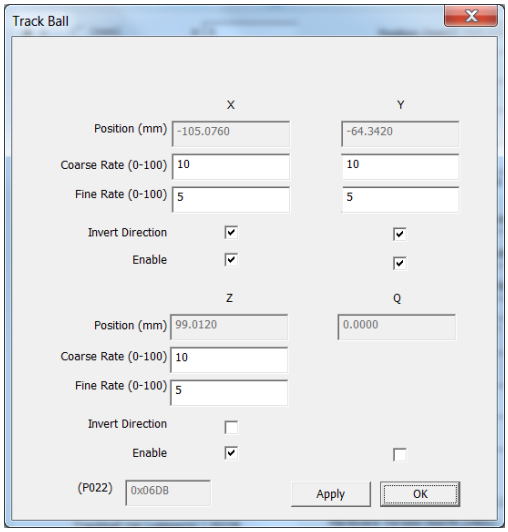

Course Rate- Sets the "High Speed" trackball velocity for the axis labeled. This value is specified as a percent of the maximum velocity for that axis.

Fine Rate- Sets the "Low Speed" trackball velocity for the axis labeled. This value is specified as a percent of the maximum velocity for that axis.

Invert Direction- Check the box to toggle the direction the stage will travel under trackball control for the axis labeled.

Enable- Check the box to enable trackball control for the axis labeled.

Joystick- Displays the Joystick setup screen.

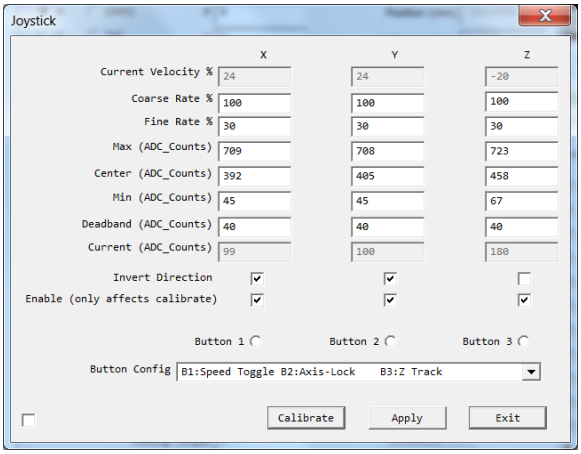

Current Velocity- Displays the current velocity generated by the joystick move as a percent of maximum velocity.

Course Rate %- Sets the "High Speed" joystick velocity for the axis labeled. This value is specified as a percent of the maximum velocity for that axis.

Fine Rate- Sets the "Low Speed" joystick velocity for the axis labeled. This value is specified as a percent of the maximum velocity for that axis.

Max/Center/Min(ADC Counts)- Sets the minimum, maximum, and center, Analog to Digital count value for the axis labeled.

Deadband(ADC Counts)- Sets the number of ADC counts around the center joystick position where joystick output is disabled.

Current(ADC Counts)- Displays the current position of the joystick in Analog to Digital counts.

Invert Direction- Check the box to toggle the direction the stage will travel under joystick control for the axis labeled.

Enable- Check the box to toggle the motor enable for joystick control. This enable/disable joystick setting only applies to the joystick calibration routine.

Button Indicator- Displays the active state of the 3 button inputs.

Button Config- The dropdown menu provides access to the 6 available button configurations.

Calibrate- Executes the Joystick Calibration routine. Follow the onscreen instructions to complete the joystick calibration process. The ADC count windows can be used to evaluate the results of a joystick calibration.

User Param - Displays the User Parameter setup screen. This screen contains parameters that control the Auto Homing, Machine Zero Position, Software Fence, and Zoom configuration setup. Settings are configured axis by axis. Use the Axis Selection buttons to choose the axis whose user param information will be displayed.

IMPORTANT: The system must be successfully "Auto Homed" prior to setting the Zero Offsett or the Software Fence positions. Machine Home can be performed using the Auto Home button from the main CNC-CONFIG screen.

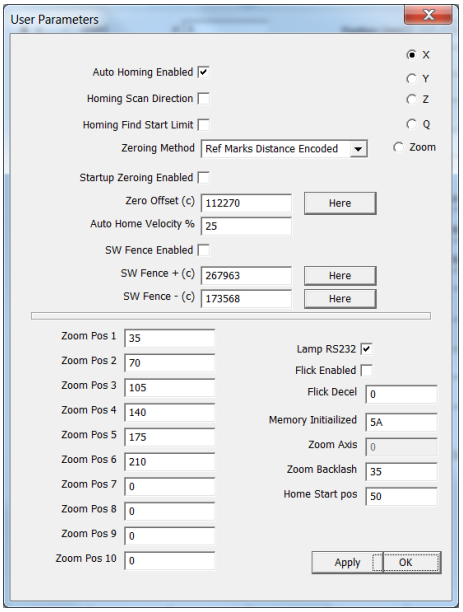

Auto Homing Enabled- Check the option box to enable CNC homing for the selected axis.

Homing Scan Direction- Check the option box to invert the direction of the Auto Home move, for the selected axis.

Homing Find Start Limit- Check the option box to require a limit switch hit, prior to searching for reference marks, during the Auto Home routine.

Zeroing Method- Select the correct encoder reference mark type for the encoders being used. Select from Ref Mark(single ref mark), Ref Marks Distance Encoded(multiple ref marks), Manual(manual reference mark crossing), Limit(Not Available).

Zero Offsett(counts)- Displays the currently set machine zero offset value in counts. Use the "Here" button to the right of the field to specify the current stage position to be used in generating the offset value against the currently established machine zero position.

Setting the stage zero position against the reference marks:

1. Open the Video Window, by selecting the "Video" button from the main mlxoptions window and choose camera source from the drop down menu. If no manual stage lighting is available, use the Light Control test sliders by pressing the "Lights" button from the main mlxoptions screen.
2. Perform a stage homing by pressing the "Auto Home" button from the main mlxoptions screen.
3. Position the stage at the desired XYZ position, and press the "Here" button for each, X, Y, and Z axis. Use the axis selection buttons at the top right to select the axis you are currently specifying the home offset position for.
4. Save settings to flash by pressing the "Save to Flash" button.
5. After homing in the M3 software the appropriate zero position will be set.

Auto Home Velocity- Set the velocity for Auto Homing for the selected axis, as a percentage of maximum velocity.

SW Fence Enabled- Check the option button to enable the Software Fence for the selected axis.

SW Fence (+) and SW Fence (-) - Displays the currently set Software Fence value in counts. Use the "Here" button to the right of the field to specify the current stage position to be used in specifying the Software Fence position, against the currently established machine zero position.

Setting the Software Fence positions against the reference marks:

1. Open the Video Window, by selecting the "Video" button from the main mlxoptions window and choose camera source from the drop down menu. If no manual stage lighting is available, use the Light Control test sliders by pressing the "Lights" button from the main mlxoptions screen.
2. Perform a stage homing by pressing the "Auto Home" button from the main mlxoptions screen.
3. Position the stage at the desired positive limit in the XY and Z axis, and press the "Here" button next to the SW Fence (+) field, for each, X, Y, and Z axis. Use the axis selection buttons at the top right to select the axis you are currently specifying the home offset position for.
4. Position the stage at the desired negative limit in the XY and Z axis, and press the "Here" button next to the SW Fence (-) field, for each, X, Y, and Z axis.
5. Save settings to flash by pressing the "Save to Flash" button.
6. After homing in the M3 software the appropriate Software Fence positions will be set stage motion will halt when reaching these positions.

Zoom Pos 1-10- Specify the count position for the zoom axis for zoom index numbers 1 through 10. Enter these index numbers into the Magnification Setup screen in the M3 software to associate the magnification position with the magnification label.

IMPORTANT: The zoom axis motor parameters must be configured from within the motor setup screen for zoom motor motion to occur. Use the zoom test screen accessed from the "Zoom" button in the main mxcncoptions page to test the zoom position moves, or to execute a zoom home.

RS232 Lamp- Check the option button to enable use of RS232 Light Control Commands.

Flick Enabled- Check the option button to enable "flick" CNC movement for touch screen enabled systems.

Flick Decel- Sets the deceleration factor for the CNC flick option.

Zoom Backlash- Specifies the number of zoom axis counts that the zoom motor will move past the target zoom position when performing a zoom position goto. The zoom motor will return to the target zoom position count after traveling the specified backlash distance.

Home Start Position- Specifies the number of zoom axis counts that the zoom motor will travel off of the limit prior to final homing, within the zoom home sequence.

Lamp- Displays the Lamp output test screen. Position the lamp sliders, or enter lamp output values, to test the light output for Lamp channels 1 through 10.

Zoom- Display the Zoom Axis test screen.

IMPORTANT: The zoom test screen is only used to perform zoom goto tests, and to execute the zoom homing routine. All other zoom axis setup is performed in either the Motor Setup screen or the User Param setup screen. See previous sections for detail.

Press the zoom buttons to the right of the position fields to execute a zoom goto to the corresponding position. NOTE: A zoom home must be performed prior to using the zoom goto test buttons. Press the "Home" button to execute the zoom home routine.

Reset State Machine – Resets the current zoom home routine. Use this reset button if the system is stuck searching for a Zoom Limit that it will never discover.

Zoom Status- Zoom axis position, following error, and error status can be read from the fields to the right of the test buttons.

Log Zoom States-Check the option box to enable additional zoom function logging for the mlxlog application.

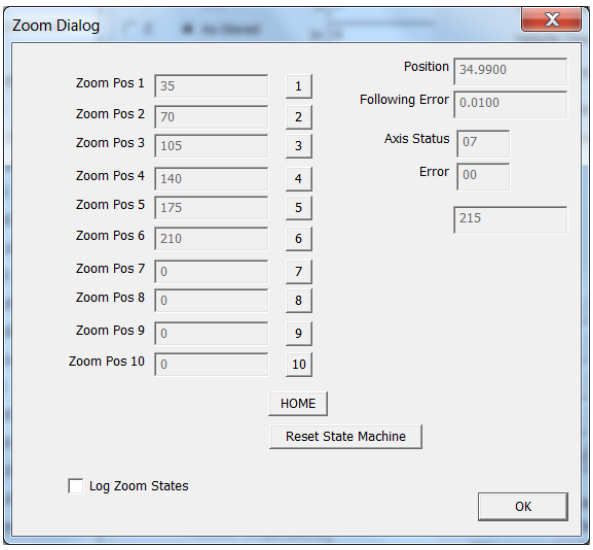

Video- Launches the "Video Preview" window. (mxvideo.exe)

Use the file menu from within the video preview window to select the correct capture source for your camera device. The video preview window can be used to assist in Encoder Setup, CNC tuning, and Machine Zero setup.

Auto Home- Initiates the Automatic Machine Homing routine based on the settings in the Encoder, Motor, and User Param setup screens.

4 Axis Goto- Displays the multi-axis goto test screen. The multi-axis goto screen can be used to execute single or multi-axis goto moves of a specified distance.

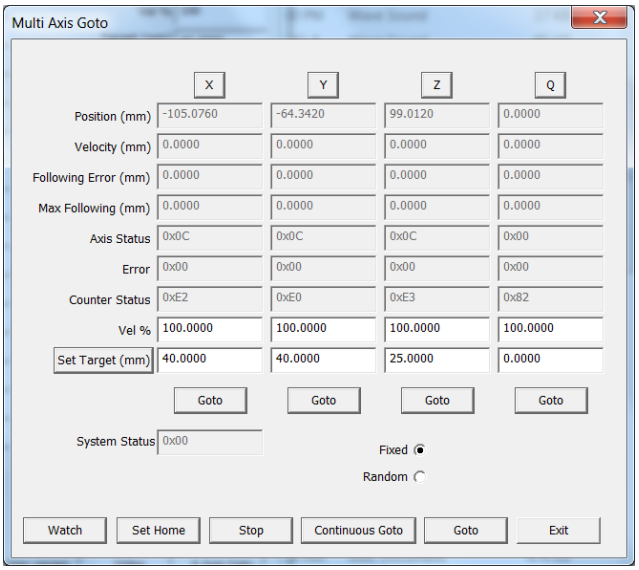

Zero the current position for any axis by pressing the axis label button found at the top of each axis column.

View the current position, velocity, following error, maximum following error, and error status for each axis being tested.

Vel %- Set the velocity to be used, as a percent of maximum velocity, for each axis test goto.

Set Target- Enter the desired test distance for each axis. This test distance will be used for single or multi-axis goto tests performed from this screen. Press the Set Target button to set the test distance to the same value as the current stage position.

Goto- Press the Goto button, found at the bottom of each axis column, to execute a single axis goto move, using the specified target distance and velocity.

Watch – Displays a large format display window for easier viewing of results.

Set Home- Sets the current stage position to the home position for all axes.

Stop- Inhibits stage movement for all current Goto tests being executed from this test screen.

Continuous Goto- Executes continues goto moves for all axes, based on the velocity and target distance currently entered.

Goto(bottom button row)- Executes a goto move for all axes, based on the velocity and target distance currently entered.

Exit- Exits the 4-axis goto test screen.

Apply- Applies all currently entered parameters to the current test setup.

IMPORTANT: Using the “Apply” button does not save all current settings to the system permanently. To save changes so that they are retained across hardware power cycles, use the save to flash function, by pressing the “Save to Flash” button found in the main mcxnxoptions screen.

Exit- Exits the mxcncoptions program.

4 M3 Software Installation

The Metlogix M-Series software should only be installed on computer systems running the Microsoft® Windows® 7/8/10 Operating Systems (32 or 64 bit).

Target systems for the M-Series software packages should be approved for use by Metlogix. Please contact Metlogix to validate PC specifications for the chosen PC model if it is being used for the first time.

Install from disc:

1. Insert the Mx software installation disc.
2. From the install menu, select “Run Setup”.
3. Follow the installation screen instructions to install the software on your PC system.
4. A shortcut to launch your M-Series software will be added to your desktop.

Install from file:

1. Locate the Setup executable file for the M-Series software you intend to install.
2. Double click the Setup executable to launch the installation utility.
3. Follow the installation screen instructions to install the software on your PC system.
4. A shortcut to launch your M-Series software will be added to your desktop.

The M2 Horizontal, and M3 software will launch as a standard program window in Windows 7/8/10. These windows can be resized, minimized, or maximized in the usual fashion, and according to Windows 7/8/10 convention.

The M2 Vertical software is designed specifically for ~10 inch tablet PC’s with the display properties configured for portrait(vertical) display. This software does not use a standard Windows application dialog. The M2 Vertical software will always launch to full screen.

4.1 The Metlogix installation folder

By default, the M-Series software installation program will install your M3 software to a folder in your “Program Files (x86)” directory. The files in this folder are critical to the functionality of your M3 software. Files in this folder should not be removed. In addition no files should be added to this folder unless specifically outlined in this document, or under the direction of a Metlogix representative.

Note: Settings files, Calibration files, Part Program files and Data and Image export files will all be stored in a separate location called the Metlogix File Output directory. These files should never be stored within the M-Series Program Files directory. The Metlogix File Output directory is discussed in the next section.

4.2 Metlogix File Output directory

After the first launch of the M3 software a folder, named “Metlogix”, will be created at the following path:

Drive Letter:\Users\Public\Public Documents\

This folder can also be reached through the Win7 libraries folder in Documents\Public Documents.

The Metlogix file output folder will contain the following sub-folders:

■ **Activity**: NA

■ **Backups**: Will contain settings, and error correction backup files. Backups are generated every 7 days by default however this backup interval can be configured within a Metlogix configuration file. Please contact your Metlogix representative for assistance with making this change.

■ **Diagnostics:** May contain Metlogix “stderr” and “stdout” files. These files are for the purpose of M3 software maintainance.

■ **Text:** This folder contains any language translation files that have been generated with the M2 or M3 translation module. These files are saved in xml format.

■ **Exports:** This folder will contain measurement data export files. Files containing measurement data will be exported from the M3 software’s data view to this folder location in either .txt or .csv format.

■ **Images:** This folder will contain images saved from the Image Archive feature of the M3 software.

■ **Parts:** This folder will contain saved part program files from the M3 series software. Files saved to this directory will have the extension “.mlxpart”.

■ **Settings:** This folder will contain the core settings files of your M3 software installation. The setup file “SettingsM3.xml” will be stored in this folder. This file contains all major file settings parameters for your M series software installation. This folder may also contain additional configuration files(metlogix.ini), camera settings files(LastDeviceDetected.xml), or error correction files(NLECnew.txt).

**The Backup, Export, Images, and Parts folders can be assigned to custom output locations or folders using the “File Locations” settings screen, located within in the main settings screen.

5 M3 Software Setup

All setup menu items referenced below can be accessed through the settings screen. Access this screen by pressing the settings button found in the M3 file menu.

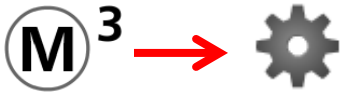

Note: Access to some settings screen may be restricted. If you do not see a setup screen mentioned in this document, confirm that your user login has the proper privileges granted for the setup screen you are trying to access.

5.1 M3 System Security and User Account setup

Security

The “Security” setup screen provides a means of configuring the M3 user accounts. Each user account can be configured with a custom password, and access rights for defining the setup screens that can be accessed by a given user. The hierarchy for defining an account’s privileges is as follows:

1) Super Administrator

2) Supervisor

3) User1…..User5

To create a user, select an existing display name using the user selector. Change the Display Name to the desired login name, and set the “Account Enabled” setting to “Yes”.

The password for the selected user is entered into the password field. If desired, set an expiration date for the password by entering a value, in days, into the “Max Days Password is Usable” field.

To configure the software to bypass the user login screen and load the selected user automatically at startup, set the “Automatically Login as This User” field to “Yes”.

To configure Access Rights for a given user, first select the user you would like to configure. Set the given Access Right to either “Yes” or ”No” to configure which Setup Screens will be available for a given user to access.

Note: Only account types with a higher security priority, than that of the target account, will be able to configure account parameters. (see hierarchy above)

5.2 Camera Setup

■ Digital camera's used must be properly installed and configured for use with the M3 software. This requires that all drivers and utilities for the camera being used are installed successfully.

■ All cameras interfaced to VED enabled M3 systems must be fully Direct Show(DX9) compliant camera devices. This can be achieved by connecting Direct Show digital cameras direct to the system or by converting analog camera sources(NTSC/PAL) to digital streams using a third party video conversion device. Video signals should be capable of being rendered in the Operating System using a Direct Show supported preview application such as Microsoft AmCap.

■ Confirm valid image by ensuring that the aspect ratio for the video image is correct. Features that have a circular shape should appear as such in the field of view. Circular features appearing "oval-shaped" or "stretched" are typically the result of improper camera frame size or incorrect aspect ratio setting for the display device being used.

Set the Video Capture Source

■ Identify your Camera as the specified "Image Source" device in the M3 Video Setup screen, located in the main M3 settings menu.

■ Select the name of your camera manufacturer to load the appropriate SDK, or select "Direct Show" for a generic Windows DX9 device type.

■ A software restart is required to apply the Image Source setting.

■ The "Config" button in Video Setup will display the selected Image Source's properties page. Image settings can be adjusted for the selected camera from these screens.

Camera and FOV calibration can begin once the M3 software displays a valid video image.

Camera and FOV calibration Order Operation Protocol (OOP)

The following calibration hierarchy is listed in the order in which it should be performed. The procedural detail for each Calibration step is detailed following the chart below.

The "calibration" items below refer to the particular M3 software calibration to be used, from within Setup. The "proof" column represents the machine test used to confirm settings selection or calibration effectiveness.

Calibration	Proof
Encoder setup	Confirm encoder count and direction using the "simple crosshair" and a calibration standard, adjust encoder settings as needed.
Magnifications/Pixel Sizes	Measure a "calibrated" circle diameter and observe for accuracy for all magnifications. Confirm pixel squareness in Video Setup, by observing X and Y pixel size.

Camera Skew (@low magnification)	Mechanical camera adjustment should precede the Cam Skew procedure. Measure the same small circle at the extreme left and right side of the FOV. Check the Y axis offsets between the measurements.
Parcentricity/Parfocality	"Circle Overlap Test" Measure the same circle, in focus, at each magnification level. Confirm by observing the position offset between mag levels and across the mag range. Each magnification level should appear in focus across magnification range.
Field of View (FOV)	Quick test: Measure a small circle in the center of the FOV. Move the stage such that the same circle can be measured in each of the four corners of the FOV. Offsets are caused by FOV errors in the optics, such as spherical aberration. Confirm correction by evaluating pre and post correction results.
Shape (circle and square)	OEM specific test method.

The "Video" settings screen (Camera calibration items)

1. Magnification Setup
2. Pixel Calibration
3. Camera Skew Calibration
4. Optical Settings(Parcentricity/Parfocality)
5. Field of View(FOV) Calibration

Video Settings:

6. Part View/Markup Overlay
7. VED Stitch Spacing
8. Display pixel resolution in corner
9. Auto Name Archive Images
10. Auto Focus Configuration
11. Archive Image Type
12. Archive Image Quality(Jpeg)

1) Magnification Setup

The M3 software supports multiple magnification levels. When more than one magnification is used, each needs to be identified, by a user specified name, and calibrated for pixel size independently. Starting from the highest magnification, perform a pixel calibration(see below), switch to the next lowest magnification, calibrate, and so on..

Magnifications are created and named in the "Magnification" setup screen. The "Magnification" setup screen button is located in the main M3 settings menu. The on screen keyboard (or USB keyboard) may be used for alpha entry.

Note: One default magnification(M1) is always created for the M3 system. This magnification can be renamed. Magnifications may only be deleted if there are more than one.

Use the “New” button on the right side of the screen to add new magnifications to the system.

Use the magnification selector in the top right corner of the screen to toggle existing magnifications, and to rename them if desired.

Use the “Delete” button on the right side of the screen to delete existing magnifications. One magnification will always exist.

Once magnifications have been created and named, all magnifications will be available for selection from all magnification dependent setup screens. (e.g pixel cal, FOV cal, etc..)

2) Pixel Calibration

Pixel size may be determined for each magnification through the use of one of two possible methods: Circle based or Stage based calibration, as described below.

2a) Circle-based Pixel Calibration

Circle-based pixel calibration is performed in the Video Setup screen of the M3 settings menu.

For systems with multiple magnifications, set your machine and software to the highest magnification to be used. The “magnification selector” is located in the top right corner of the Video setup screen.

Enter the calibration artifact diameter into the “Artifact diameter” field. The entered value should be in the unit type of the currently selected display unit type. For systems set to display in inch, the artifact value should be entered in inch.

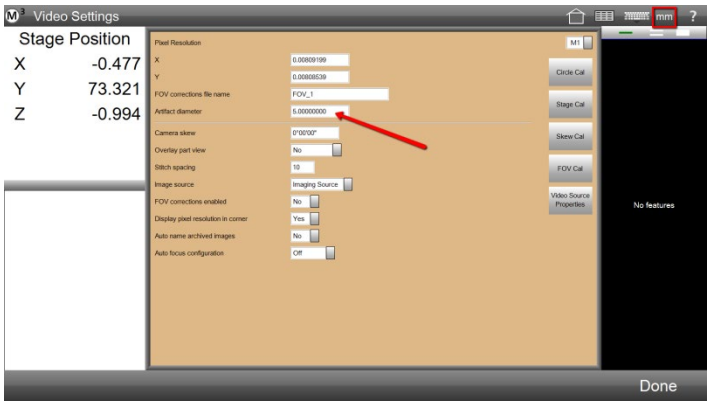

-Press the “Circle cal” button, located on the right side of the screen.

-The M3 software will exit to Live Video and display a target crosshair in the center of the field of view.

-Position the crosshair at the center of the target calibration artifact. A blue active measure circle should appear around the edge of the target artifact.

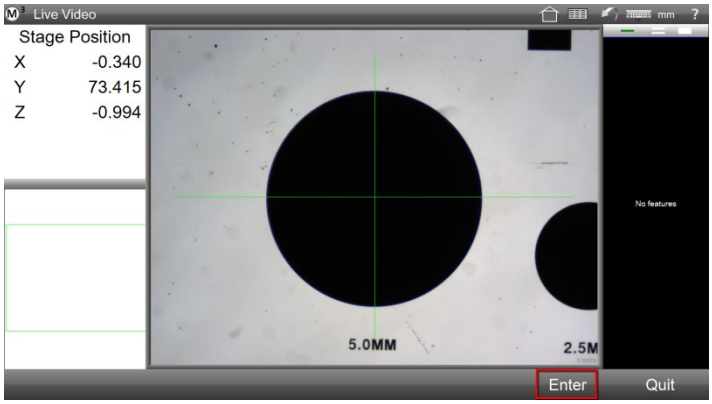

-Press the “Enter” button to confirm calibration.

-The M3 will return to the Video setup screen, indicating the calculated X and Y pixel size for the currently selected magnification level.

The currently selected magnification has been calibrated.

Repeat the above procedure for each magnification to be calibrated in the system.

2b) Stage-based Pixel Calibration

Stage-based pixel calibration is performed in the Video Setup screen of the M3 settings menu

Note: X and Y stage based Pixel calibration requires that the Encoders have been properly configured in the M3 Axis setup or mxcncoptions software. Resolution and Count Direction should both be confirmed prior to proceeding with the pixel calibration.

The M3 software supports multiple magnification levels. When more than one magnification level is used, each magnification level needs to be identified, by label name, and calibrated independently. Starting from the highest magnification, perform a pixel calibration, switch to the next lowest magnification, calibrate, and so on..

-Set your machine and software to the highest magnification to be used.

-Select the “Stage cal” button from the Video setup screen to begin pixel calibration routine.

-The system will exit to the live video view, and place the x axis teach tool along the left side of your field of view.

-Position the stage so that an in-focus, sharp, vertical edge crosses through the opening in the center of the pixel calibration tool. A small, blue, candidate point indicator will appear when the edge is properly in position. Press the “Enter” button, or the screen, to enter the calibration point.

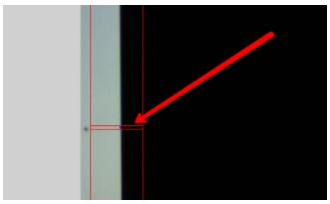

-The calibration tool will then move to the right side of the field of view. Drive the stage in the x-axis, taking care not to move the y-axis, until the calibration tool rests over the same vertical edge. Press “Enter”, or the screen, to capture the second x-axis calibration point.

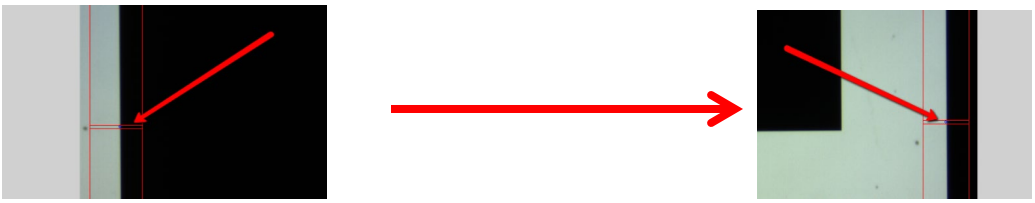

-The calibration tool will now move to the top of the field of view. Position the stage so that an in-focus, high contrast, horizontal edge crosses through the opening in the center of the pixel calibration tool. A small, blue, candidate point indicator will appear when the edge is properly in position. Press the “Enter” button, or the screen, to enter the calibration point.

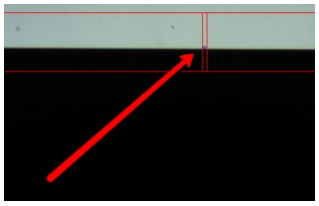

-The calibration tool will move to the bottom of the field of view. Drive the stage in the y-axis, taking care not to move the x-axis if possible, until the calibration tool rests over the same horizontal edge. Press “Enter”, or the screen, to capture the second x-axis calibration point.

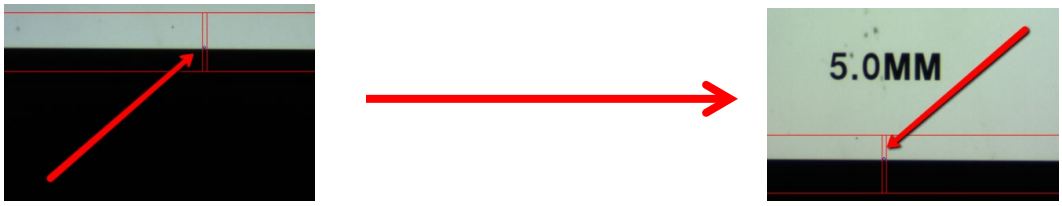

This completes the current magnifications pixel teach routine. If more magnifications are to be used, select the next (lower) magnification, and repeat the pixel calibration process until all mag levels are successfully taught.

3) Camera Skew Calibration

Camera skew calibration is performed in the Video Setup screen of the M3 setup menu.

Camera Skew Calibration should be performed for systems that exhibit rotational error due to misalignment in the camera mounting system of the machine.

-Select the “Skew Cal” button from the Video setup screen.

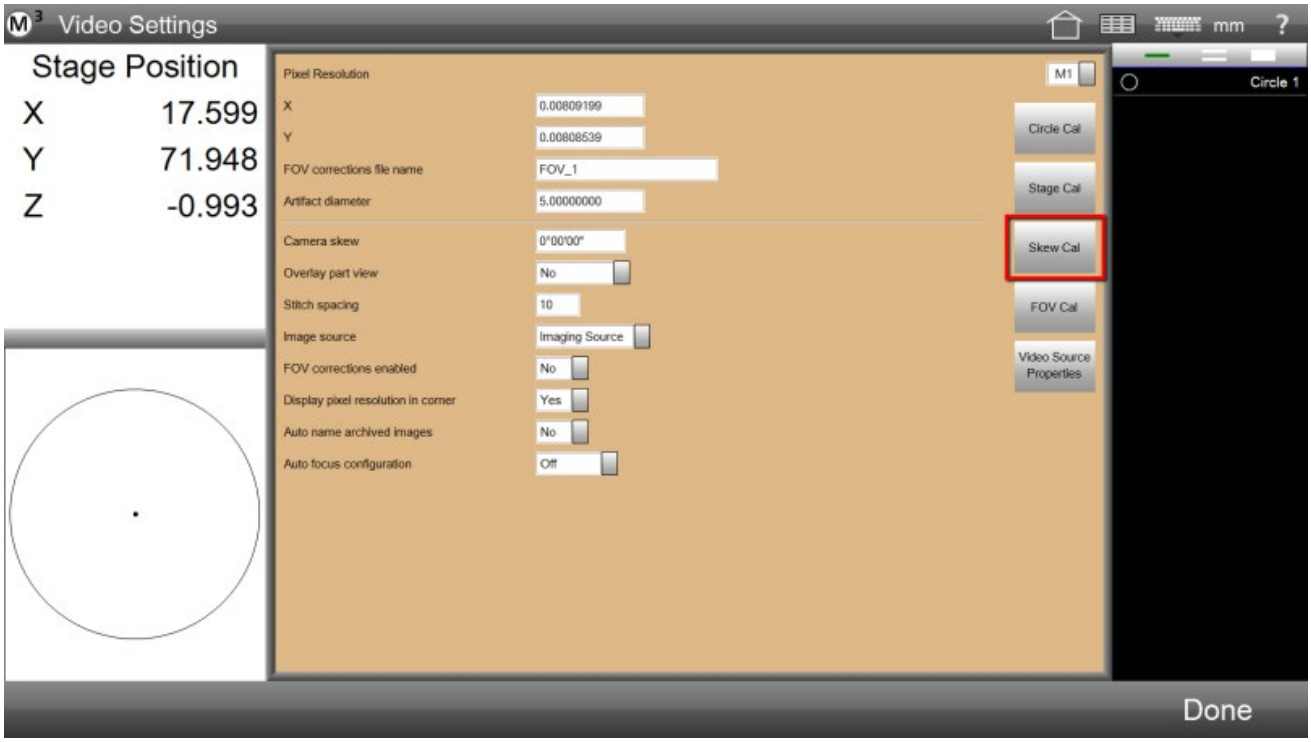

-Position an in-focus, high-contrast, horizontal edge within the circular skew calibration video tool at the left of the field of view. The tool will turn green, and a yellow candidate point indicator will appear when positioned correctly. Press the “Enter” button, or the screen, to enter the skew calibration point.

-The skew calibration video tool will move to the right side of the field of view. Drive the machine stage in the x-axis until the calibration tool is positioned over the previously acquired calibration point on the horizontal edge. Press the “Enter” button, or the screen, to enter the second, and final, skew calibration point.

The resulting camera skew offset value will populate the Camera Skew field in the Video setup screen.

2) Parcentricity and Parfocality Calibration (Optical Setting)

Parcentricity and parfocality calibration is performed by measuring a sample of reference features, and then importing them into the M3 system. This feature data is then used to calculate the appropriate offset values for maintaining parcentricity and parfocality in a given system.

***Note**:* This calibration requires that the pixel size, for each magnification, be successfully established.

-Set the measuring machine, and the M3 mag selector, to the highest magnification.

-Position, in the middle of the field of view, the largest circle calibration artifact, that can be imaged completely within the screen.

-Measure the circle using the “Measure Logic” video probe.

-Select the next magnification down, and repeat the circle measurement. Do the same for each magnification until the lowest mag is reached.

-You should have one circle feature in the feature list for each magnification level currently configured in the system.

-Go to the M3 setup menu and select the “Optical Settings” button. The “Optical Settings” setup screen will only be available when more than one magnification is defined in the system.

-Set the magnification to the mag label name that represents your highest magnification level.

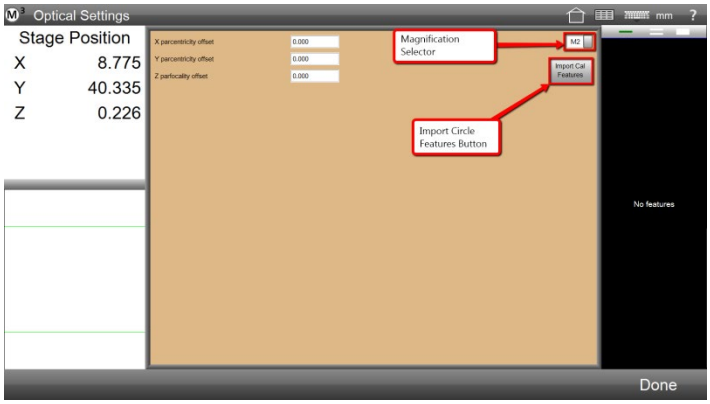

-Press the “Import cal features” button, located on the right side of the screen.

-The high magnification will now be used as the reference magnification. Toggling to different magnifications will display the X, Y, and Z offset values between the currently selected magnification, and the reference magnification.

The calibration is complete. To confirm calibration results, see the OOP hierarchy, and test suggestions, at the beginning of the Camera Setup section.

5) Field of View (FOV) Calibration

The Field of View (FOV) correction capability in the M3 software is designed to correct for, and to minimize, the effects of spherical aberration, lens imperfection, machine mechanics, and sensor defect, for a given video measuring machine.

The correct calibration grid should be selected to match the specification of a given video measuring machine. Factors such as stage size, magnification range, camera sensor size, and accuracy and repeatability requirements, will all play a role in choosing an FOV calibration artifact. Please contact your Metlogix representative for assistance with this selection.

FOV Calibration Procedure

Fixture the grid to the measuring stage, confirming that artifact movement is minimized or eliminated. The grid position on the stage should be aligned as much as possible to the measuring stage. For machines with proper camera alignment, the grid should appear aligned in XY within the live video image of the M3 software.

Center the artifact grid in the FOV, confirming that equal space exists around the horizontal and vertical sides of the FOV.

Select the number of rows and columns to be used for the FOV calibration. The number of rows and columns that fit in the FOV will vary based on the magnification level used, select an appropriate number of rows and columns for each calibration of a magnification.

Select the “Video” setup button from the main M3 setup menu.

Note the default FOV file name displayed in the “FOV corrections file name” field. This filename can either be used, or a new file name can be entered by clicking in the field and entering the desired FOV correction file name.

Press the “FOV cal” button, located on the right side of the Video setup screen.

Enter the grid spacing and circle artifact diameter for the FOV calibration grid being used.

Enter the number of rows and columns to be used for the FOV calibration being performed. This number will be based on the maximum number of rows and columns that within the FOV.

Press the “Teach” button, located on the right side of the screen.

Position the crosshair-grid overlay on the FOV grid, confirming the green crosshair is as near center(as possible), for each calibration circle in your grid.

Note: For systems with moveable stages, the machine stage position can be adjusted to alight the crosshair and circle grids. In this case the stage should be completely immobilized prior to completing the “Analyze” and “Calibrate” steps of the FOV procedure.

Note: For systems with stationary measuring stages, the calibration grid will need to be adjusted for proper alignment with the FOV crosshair grid. Once aligned, the grid should be securely fixtured prior to completing the “Analyze” and “Calibrate” steps of the FOV procedure.

Once the grid is aligned with the green crosshairs, press the “Analyze” button.

Indicators of positional error will appear, as blue direction lines, at each calibration crosshair location. The blue lines indicate the direction, and relative amount, to be applied at each correction position.

Press the “Calibrate” button to generate the FOV correction file and enable the FOV correction.

The FOV correction file name, and enable state, can always be observed in the Video setup screen.

7) VED Stitch Spacing

The **MeasureLogic™** probe can be configured for custom stitch spacing. Stitch Spacing is defined as the distance, in pixels, between each point captured, as part of Measure Logic probe measurement. The spacing is configured in the Video setup of the M3 settings screen.

The default stitch spacing is 10 pixels.

Set the desired number of pixels between VED stitches by changing the value in the “Stitch Spacing” field in the Video setup screen.

8) Display pixel resolution in corner

Display pixel resolution in corner setting configures the M3 software to display the pixel resolution, for the current magnification, in the bottom right corner of the live video image.

Set the “Display pixel resolution in corner” item to “Yes” to display the resolution value for the current magnification in the bottom right corner of the live video window.

9) Auto name archived Images

When set to “Yes” the M3 software will automatically assign a file name to the exported image file according to the following convention:

“Img(x).bmp”, where x is an automatically assigned image number. The exported .bmp image will, by default, be sent to the “Images” folder in your metlogix file output folder.

When set to “No”, all image archive commands will trigger the Windows 7/8/10 save file dialog box. Enter the desired filename, choose an export location, and press Save, to export the archived image

10) Auto Focus configuration

The proper camera interface hardware is required to utilize “latched” or “triggered” auto focus functionality. If you are unsure as to whether the camera and measuring machine are equipped for use with auto focus, contact your Metlogix representative for assistance.

The Auto Focus configuration setup item configures the M3 software for use with the Auto Focus feature. The following (4) choices are available for selection from the Video setup screen:

Off: Disabled the auto focus functionality for the system.

Latched: Configures the M3 software for a latched frame camera interface.

Triggered: Configures autofocus for a triggered frame camera interface.

Free: Configures autofocus for a software frame latch based autofocus functionality.

11) ROI AF

A system can be set to focus on a region of interest (ROI) which is defined by the focus rectangular region instead of the entire frame. This improves focus speed. Currently, this function is only supported when an IDS camera is used.

12) Auto Tune AF

The is an option that allows the system to set the best auto focus parameters depending on the machine configurations.

VELOCITY AND SEARCH DISTANCE: Use the following parameters in the metlogix.ini file to adjust the speed and search distance used for CNC enabled Auto Focus executions. The velocity parameter should be set as an absolute velocity, and as a range from minimum to maximum applied, in scale, to the configured magnifications(pixel size) in the system.

```
[FocusCnc]
MaxScans=4
MinRetract=.2
MaxRetract=2
MinVelocity=0.1
MaxVelocity=2
```

13) Archive Image Type

Select the image format to be used for archived images. Select from BMP, JPEG, PNG, or TIFF.

14) Archive Image Jpeg quality(%)

Sets the quality for exported Jpeg images. Set as a percentage of full frame quality.

5.3 Optical Edge Setup

The following settings related to the Optical Edge Detection system are found in the “Optical Edge” setup screen of the main M2 menu.

NOTE: The edge electronics of the M2 interface hardware are designed to be calibrated, or taught, using a balanced or equal light input for the “reference” and “screen” fiber optics. Typical comparator configurations will have significantly brighter “reference” output, than the screen channel, based on traditional optic mounting methods. In these cases the “reference” input should be adjusted by manipulating the position of the reference fiber optic termination at the comparator’s lamp housing. Please contact your Metlogix representative for additional information on limiting the “reference” light source transmitted to the Metlogix hardware.

The **“Target Ref”** and **“Actual Ref”** values, displayed in the Advanced screen(see below), can be used to observe the current light levels for the screen and reference channels respectively.

Advanced:

-The “Install” screen displays the Target and Actual reference values for your optical edge system. The **“Actual Ref”** displays the light value for the reference channel of you edge system. The **“Target Ref”** displays the light value of the screen channel of your optical edge system.

**Prior to performing the edge teach, light input for your reference channel should be adjusted to bring the actual and target reference values to as close to the same value as possible.

-The “Advanced” screen displays the current gain, and potentiometer values for the screen and reference light signals in the system. These values are by default a static reading and the result of the most recent edge teach for a given magnification. Pressing “Start Install” will initiate a live reading of these values. The “Number of reads” field will indicate the number of sample taken for a given live sample session.

-The “Velocity correction factor” field displays the currently set correction factor for velocity compensation. This compensation is designed to eliminate the electronically induced lag that occurs when taking points at varying velocities. The default value is set to 350 and this value will be suitable for most cases.

Cross Calibration:

In a typical comparator configuration, the crosshair center and the optical edge sensor are not positioned in precisely the same location. The cross calibration routine provides a means of generating the offset values, in X and Y, between the comparator screen crosshair, and the optical edge sensor to correct for this error. These offset values will then be utilized by the system to eliminate this offset error.

-Clear the feature list by selecting “New Part” from the M2 menu.

-Measure a circle using the Optical Edge Probe.

-Measure the same circle using the simple crosshair.

-Navigate to the “Optical Edge” settings screen and press the “Cross Cal Import” button.

-The calculated offset values will be entered into the X and Y offset fields.

Distance Calibration:

In some cases the edge characteristics of certain parts may produce measurement inaccuracies, even when in focus. For these circumstances the “Distance Calibration” procedure can be performed according to the following procedure:

-Place a calibration artifact(gage pin or block) of a known size on the comparator stage.

-Access the “Optical Edge” setup screen from the M2 settings menu.

-Press the “Distance Cal” button from the right side of the screen.

-Enter the nominal artifact size into the field at the bottom of the screen.

-Press the “Start Cal” to begin the distance calibration.

-Follow the on-screen instructions, crossing one edge three times, followed by the second edge three times.

-Once complete, the entered nominal size as well as the newly calibrated distance value will be displayed.

-Press Done to exit the distance calibration routine.

Edge Teach and Multiple Magnifications:

The M2 software supports multiple optical magnification levels. When more than one magnification is used, each should to be identified, by a user specified name, and the edge value taught independently.

Magnifications are created and named in the “Magnification” setup screen. The “Magnification” setup screen button is located in the main M2 settings menu. The on screen keyboard (or USB keyboard) may be used for alpha entry.

Note: One default magnification(M1) is always created for the M2 system. This magnification can be renamed. Magnifications may only be deleted if there are more than one.

Use the “New” button on the right side of the screen to add new magnifications to the system.

Use the magnification selector in the top right corner of the screen to toggle existing magnifications, and to rename them if desired.

Use the “Delete” button on the right side of the screen to delete existing magnifications. One magnification will always exist.

Once magnifications have been created and named, all magnifications will be available for selection from all magnification dependent setup screens.

5.4 Stage Correction

Repeatable errors of measurement due to stage characteristics such as straightness, squareness, and linearity can be corrected in the M3 software using one of the supported Stage Correction methods. These corrections cannot compensate for dynamic errors such as temperature variation or mechanical backlash.

Supported stage correction methods include;

- Non-Linear Error Correction (**NLEC**)
- Segmented Linear Error Correction (**SLEC**)
- Orthogonality (**Squareness**)
- Linear Error Correction (**LEC**)

Note: NLEC and SLEC stage corrections require that the machine have the ability to set a repeatable machine zero. The machine zero must be set at the start of any M3 software session where the corrections are to be applied. See the "Reference Marks" section in the Axes Setup section of this document for more information.

NLEC (non-linear error correction)

NLEC corrects for measurement error in the XY measuring plane by applying correction coefficients generated by measuring a traceable calibration grid. The coefficients are produced by comparing the measured "observed" locations on the grid to the certified, "actual" locations.

Note: **If NLEC is used, no other stage corrections are necessary in the XY plane.**

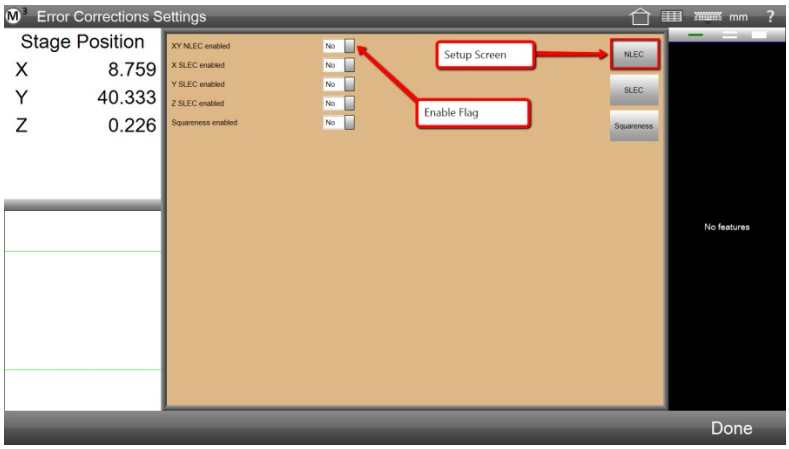

The correction data file is named NlecNew.txt and is located in the settings directory within the Metlogix file output directory. This file is encrypted and may not be changed manually. In a new system, the file is a placeholder only, and will be overwritten when the calibration is performed. The presence of the file does not necessarily indicate the stage has been calibrated.

Calibration may be performed using non-Metlogix software and applied in the M series. This procedure is described in a later section.

The following is a suggested procedure for calibration using the M3 to collect the calibration data.

Preparation for calibration (or recalibrating):

1. Configure the M3 software for a repeatable machine zero position using either a hard stop or reference marks.

2. If you are calibrating from a grid for the first time, be sure that NLEC is disabled, in the Error Corrections setup screen.

3. After homing the system (setting machine zero), create a program that measures the calibration grid.

   Details: First record datum steps (skew on bottom row and zero X and Y at lower left). Delete all features but the zero. Then measure the artifact in serpentine order. At the completion you will have all the "actual" positions. You may wish to apply position tolerance to the features so that the accuracy can be easily assessed. A report may be printed to include with the systems calibration documentation.

4. Create an ACF file if the grid you are using has certified positions (optional)

   Details: The ACF file should contain only the grid positions you are actually using in "raster" order from the bottom row. The first position (corresponding to the lower left) should be zero in the ACF file. The ACF file is named grid.acf and should be placed in the settings directory of the Metlogix file output folder. If the file is not found, the calibration will assume that the calibration grid is perfect.

5. Enable the NLEC status indicator in the NLEC setup options.

After all of these preparations, and with the M3 feature list containing only the calibration measurements:

Press the Import button in the NLEC setup options to perform the calibration. The actual features are compared to the certified or nominal positions and the NLECNew.txt data file is written to the settings directory. If the calibration is successful, a success message will be displayed. In addition the corrections will be enabled.

Note: Take care not to press the Import button a second time.

Exit from the system setup and confirm that the corrections are active (the indicator should display a green checkmark).

Checking the NLEC correction

Run the program that you created to do the calibration and note the accuracy by examination or a report with tolerances.

The calibration routine may be performed incrementally. The import may be performed again using these results (measured with corrections active), and the data file will be adjusted accordingly.

If the calibration is not successful (no success message), please contact your Metlogix representative for help in finding the cause.

Using NLEC.TXT from another calibrating system:

Important preparation: If you plan to use an existing correction file (NLEC.TXT), the position of the machine zero in X/Y must be (approximately) the same as that used in the calibration process. Ensure this (while using the calibration software) by making temporary marks on the stage to allow you, at any time, to move to the zero position that was present during calibration. After configuring the Metlogix readout on the same stage, if the DRO does not read zero at this position, use the zero offset in the axes setup to "move" the home position. A match of position within 0.250 mm will be adequate for typical systems.

Assuming the Metlogix system has not been calibrated already (see last section), when the NLEC.TXT file is copied to the M3 settings directory, it will be imported the next time the system is started. An “NlecNew.txt” file will be written to the settings directory with the correction data extracted from “NLEC.TXT”.

It is possible to “force” the “NLEC.TXT” file to be re-imported by deleting the “NLECNew.txt” file from the settings directory (or moving it to a different directory). The import requires that the software be restarted.

The import and conversion of “NLEC.TXT” does not enable NLEC corrections. To confirm the corrections, enable NLEC, in the corrections setup screen, and measure the features of the grid.

SLEC (segmented linear error correction)

SLEC corrects for nonlinearities of a single axis. The entire range of a given axis is typically broken into equal length segments. The linear errors, which may vary between segments, are corrected according to which segment is being traversed. Standard and observed position values, generated from measurement of (certified) positions along a linear calibration artifact, are entered for each segment or station.

***Note:* X and Y SLEC are not needed if NLEC is used.**

SLEC calibration and correction requires that the axis have a repeatable machine zero position. Before starting the calibration, use axis setup to define a startup zero method and use it to establish home or machine zero. You may also use the offset fields to place the home position wherever is convenient. That optional placement must also be done before the SLEC calibration.

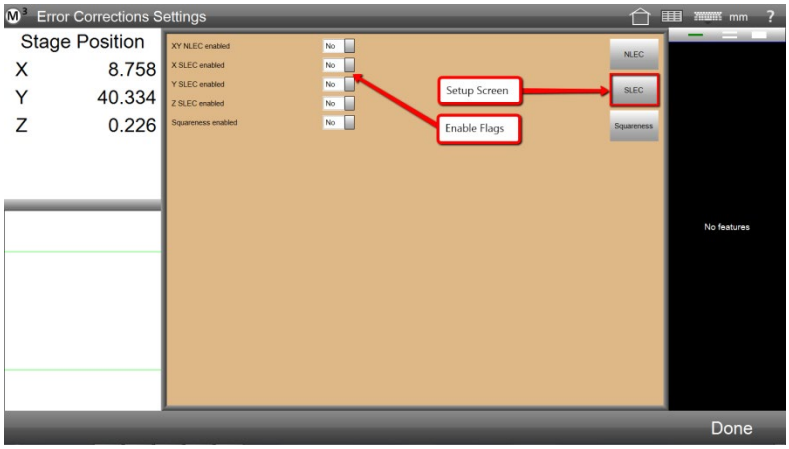

For the original calibration, be sure to disable the SLEC correction under the corrections setup page. It is possible to recalibrate later on using corrected data. That is called an incremental calibration. See comments in step 5 below.

Calibration procedure:

1. Manually align the calibration artifact with the axis to be calibrated. The artifact will allow a number of position measurements in relation to a part zero measurement at the minimum end of the artifact. Perform a skew on the artifact for best results, and perform a datum zero.
2. After the datum operations, delete the datum features except for the zero position and measure all the desired positions in ascending order. If the original zero was deleted, it should be re-measured first. The calibration/correction can use equal or unequal segment sizes along the same axis.

3. For each station (position), enter a nominal position for each of the actual features (in the tolerance views). Set a tight tolerance if desired as the same procedure will be used to confirm the calibration. Set the nominal position of the zero feature to zero. It is only necessary to set nominal and optional bidirectional tolerance on the axis being calibrated.
4. Save the part file for future use if desired. In the correction setup page, select the axis you are calibrating and press Import. If the feature data is correct, the system will display the stations according to the actual and nominal entries of the part. A message will be displayed indicating success and the correction will be enabled for the axis.
5. You may run the part again (i.e. as a program) to confirm that the correction is working. If you plan to recalibrate the axis in the future, it is important to place the calibration artifact at approximately the same position on the stage.

Incremental SLEC calibration procedure

The incremental calibration procedure is identical to the initial calibration outlined above except that the artifact is measured **with SLEC correction enabled** for that axis. When the features are imported, the software will adjust the corrections and display the correction data "as if" the calibration was absolute. Run the part file a second time to confirm that the correction is accurate.

LEC (linear error correction)

Linear error correction can be considered a simple subset of SLEC. LEC applies a singular correction coefficient over the entire range of a single axis of travel on a machine stage. The coefficient is calculated based on a single set of standard and observed values from a calibration artifact. **LEC is not needed if using NLEC or SLEC on the axis.**

Simple LEC may be satisfactory in some systems and is easy to calibrate. A repeatable machine zero position is optional. There are two methods to perform the calibration.

1. Perform all of the steps of SLEC calibration, but measure just one position in addition to the zero position. The SLEC import is used, but there will be exactly two features in the feature list. Don't forget to select the axis before pressing Import. For the best accuracy, use as long a length as possible to calibrate LEC.
2. Skew the part and then measure **a distance feature** the length of the part. Delete any other features (keep only the distance) and enter tolerance data (nominal value and optional tolerances) for the axis you are calibrating. Use the SLEC Import button. Don't forget to select the axis before pressing Import.

Either method will display LEC data in the correction table at left. A success message should be displayed, and the correction will be enabled. You may re-measure the length to confirm that correction is working.

5.5 Orthogonality (Squareness)

Squareness correction compensates for lack of orthogonality between the X and Y axis on a machine stage. A length artifact is measured both at 45 degrees and 135 degrees and the observed difference between the two lengths (they should be identical) is used to calculate an axis angle value and squareness correction coefficient.

This calibration is done after LEC or SLEC. It is not needed if using NLEC.

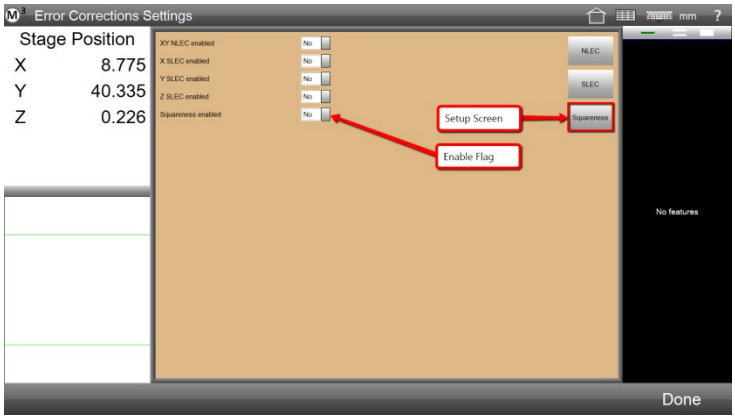

Squareness calibration and correction does not require a machine zero. It is assumed that the angle between the X and Y axis is the same regardless of the current position. A length artifact is used for the calibration, but the actual length does not need to be known. It is only necessary that the length is able to be measured when placed on the stage at a 45 degree angle and at 135 degrees.

Calibration procedure: (disable squareness correction before performing the calibration)

1. Place the length artifact on the stage at a 45 degree angle. It may be convenient to define a part zero to help in this placement, but do not use the skew or alignment buttons. Measure the length as a distance feature. A rule of thumb is that the X and Y components of the distance are not to be more than 5% different. Delete all features except the distance. This is known as the radial distance.
2. Place **the same length artifact** on the stage at 135 degrees. Again, be sure that the placement is such that the X and Y length components be equal to within a 5% margin. Measure the length as a distance feature and delete any intermediary features. This is known as the tangential distance. There are now two distance features in the feature list.
3. From within the "Error Correction" setup screen, use the Import button in the "Squareness" screen to find the Squareness angle. Note that the distances may be entered manually if desired.

   Note: It is the "L" coefficient of the distance that is used to perform the calibration.

4. A success message will be displayed and the correction will be enabled. To confirm the calibration, re-measure the length at 135 and 45 degrees. The length should be nearly the same in either orientation.

5.6 Other Software Settings

The following section will cover the remaining software settings found in the M3 settings screens. All general settings discussed below can be accessed from the corresponding M3 Settings screen.

- Factory and System Options
- Contact Information
- About Screen
- Languages
- File Locations
- Light Control (only available for Light Control enabled systems)
- Measure
- Part View
- Printouts
- Export
- Programs
- Desktop
- Display Formats
- Sounds
- Colors

- Joystick(CNC enabled systems only)

5.7 Factory and System Options

- “Factory” and “System” options provide access to the Factory Options and System Options enable screens. Options in these screens can only be enabled if the connected Metlogix hardware has been authorized, and configured, for use with a given option. Access to the Factory Options and Systems Options screens is only available for the Super Admin account login.

5.8 Contact Information

-The “Contact Information” screen provides access to the Contact Information form. This form can be filled out with information for an OEM, distributor, or dealer. Name, Address, Phone, Email, and Website information can all be entered. Information added to this Contact Information form will be displayed in the system’s “About” screen.

Note: It is recommended that, once Contact Information is entered for an OEM or distributor, that access to the “Contact Information” setup screen be restricted for standard User logins. This will prevent unauthorized manipulation of the contact information. See the M3 Security and Account Setup section earlier in this document for more information on defining user privileges.

5.9 About Screen

-The “About” setup screen contains detailed system information for the current M3 software installation. The software version number and release date, currently enabled system options, and user name currently logged in, can all be viewed from within this screen.

-Specifics on the connected Hardware can also be viewed from this screen by pressing the Hardware button.

-Contact Information entered in the “Contact Information” setup screen will be displayed in the “About” screen.

-Provides access to the Read and Write Settings functions, for modifying system licensing for the connected hardware.

Use a Metlogix Factory supplied “mlxoptions.txt” file, and the following procedure to modify the licensed options of your Metlogix hardware.

1. Exit the Metlogix software, if it is running.
2. Place the “mlxoptions.txt” file in the “Backups” folder found within the “Metlogix” file output directory. (This folder is typically found in your Public Documents folder. See M3 Setup Guide for assistance with locating your Metlogix file output directory).

   IMPORTANT: Your Metlogix Encoder Interface Module must be connected and powered on for the options programming to be successful.

3. Launch the Metlogix software. Access the “About” setup screen found in the main Settings menu.
4. Press the “Read Settings” button found in the lower left corner of the “About” screen.
5. You will see no change to the software screen; however the programming has just been completed.
6. Exit out of the Metlogix software and then re-launch, your options have been programmed.

   IMPORTANT: The option(s) that you have just programmed to your Metlogix hardware may still need to be enabled within the software. Check the “Factory Options” screen within setup to confirm that the desired options are enabled. Accessing the Factor Options screen will force a software restart.

5.10 Languages

-The M3 software provides multi language translation. Full translations are available for the following 9 languages: English, Spanish, German, French, Italian, Spanish, Portuguese, Polish, Czech, Traditional Chinese, and Simplified Chinese.

-Select the desired Language from the “Languages” settings menu. The translation of screen text will occur immediately, no software restart is required.

5.11 File Locations

-The “File Location” setup screen is used to configure target locations, on the system, for saving part files, data exports, archived images, and settings backup files.

-Click the item you would like to select a target folder location for.

-Choose the target location from the Windows Browse dialog box and press OK.

5.12 Light Control

-The M3 software supports 6 channels of analog light control. Light control channels are defined as diascopic(sub-stage), episcopic(coaxial), or Quadrant(ring).

-The quadrant light channels include four, discrete, channel designations where each ring quadrant's illumination can be ramped independently.

-Enable the MISC lamp channel, by setting the flag "Has a Misc Light" flag to "Yes", and specifying a desired channel number to use for this slider.

-The M3 light control system utilizes a 0-5 Volt analog interface, and supports line output enable/disable. (See diagram and pinout on page 7)

-Machine lighting sliders are either enabled or disabled by setting the "Has light channel" field to "Yes" or "No". Light sliders set to "No" will not be displayed in the Light Control UI.

-Each light control path to be used is specified by a channel output line number. The output line number is entered into the corresponding control field, either episcopic(1 channel), diascopic(1 channel), or Quadrant(4 channels).

-Enter min and max output parameters, as percentage and percentage of max, to change the lamp output range for your light control system.

-When control line enables are being utilized, set the "Lights have enable/disable" field to "Yes". When enable/disable is being used, the active bit state can be defined by entering a "1" or "0" into the "Light enable state for output line" field.

-Set the "Allow assign to magnifications" flag to "Yes" to enable magnification/light level memory. When set to yes, a small level memory icon(small sun w/ Nx label) will appear in the bottom right of the Video Window, when the light controls are displayed. Set this button to active to associate the current light levels, with the current magnification.

IMPORTANT: If you set new light levels while the memory button is active, toggle the active state of the memory button once, to associate the newly set light levels with the currently selected magnification.

5.13 Measure

"Auto Enter" count down time(seconds)

This parameter controls the duration of time, in seconds, required for the auto point enter, countdown timer to expire. This parameter controls Auto Point entry for both measuring mode, and program playback mode.

"Auto Enter" no movement threshold(seconds)

This parameter controls how long, in seconds, a target position must be maintained to enable the start of the "Auto Enter" countdown timer. This parameter can be thought of as a dwell time requirement setting for activating the Auto Enter timer.

Automatically save UCS

This setting controls the behavior of the "multiple reference frame" system in the M3 software. Please see the M3 User Guide pages 45 and 46 for detailed information on the Auto Save UCS setting.

Statistical Point Filtration occurs during the calculation of features from probed points. Least squares fits (in all multi-point features) are filtered by default while alternate fits (circle/arc, line, and plane) do not normally use filtering. Alternate fits include "Best Form" and Min and Max circle/arc. Use of filtration is controlled with the enable items.

Sigma Factor

For both least squares and alternate fits, the sigma factor is used as a multiplier for the standard deviation of the error of the probed points in relation to the feature calculated from those points. Three sigma means that a point may be filtered only if the error of that point is greater than the standard deviation of error multiplied by three. A larger number means less filtration.

Proportion Factor

For both least squares and alternate fits, the proportion factor simply is the fraction of the probed points set used to calculate a feature that will be retained, even if one or more of those points retained are outliers. The fraction value has a maximum of 1.0, in which case, no points will be filtered. 0.8 means up to 20% of points may be filtered.

Note: statistical point filtration also requires a minimum number of points to start with (16 points) and point error greater than the estimated measure repeatability (based on the encoder resolution or pixel size (in video measuring systems).

■ **Enable Tolerance places:** When enabled, when a nominal value is entered by rounding the actual, the system will automatically insert +/- tolerance values based on the rounding digit. The tolerance values to be used are specified in a "lookup table" accessed from the nominal entry screen (the x.xx button).

For example, if an actual diameter is 4.2493, and the requirement is for 2 place tolerances, the user would press the "4" in the nominal entry screen, yielding 4.25. Since this is the second place digit, the system would then enter the +/- tolerance values specified in the table (0.01 by default). Each coefficient may use a different number of places according to the rounding function.

■ **Tolerance Places on New Part:** The table used to specify the tolerances applied for each place may be set to default values when a "New Part" is created or kept indefinitely to apply to all parts.

■ **Allow ++/-- tolerance entries:** This setting enables ++/-- entries on circle diameters only.

■ **Auto Finished Enabled:** When enabled, the software will automatically finish, or complete, feature measurements that reach a total number of probed points, as specified in the “Auto Points” features fields displayed below the flag. Set the desired number of points, for each feature type, that the Auto Finish functionality should be used for. Enter a value of “0” to disable Auto Finish for that feature type.

5.14 Part View

The “Part View” settings screen contains settings for the following part view specific display options.

■ **Display Field of View Indicator:** Set this field to “Square” to display a green Field of View Overlay in the part view. When viewing the part view the green FOV indicator will represent the current FOV region relative to the total part view. For Optical Edge enabled systems the FOV indicator can also be set to “Round” or “Crosshair” style. The field of View Diameter, Width, and Height can be configured for non-VED systems, using the appropriate fields. Set this option to “No” to hide the FOV indicator in the part view.

■ **Display Grid:** Set this field to “Yes” to display grid lines on the part view. Set to “No” to hide the grid lines in the Part View.

■ **Grid Spacing:** Enter the desired spacing for the grid density. The currently selected unit display type is used for the grid spacing value entered.

■ **Display Origin Indicator:** Set this field to “Yes” to display the Origin Indicator in the part view. The Origin Indicator is a small symbol that will indicate the location of the currently set datum zero position. This symbol will shift in the part view when a new zero position is set. The axis with (2) dot indicators represents the Y-axis, the axis with (1) dot indicator represents the x-axis.

■ **Display Scroll Bars When Necessary:** Set this field to “Yes” to display scroll indication bars on various software screens when content extends beyond the currently viewable space. Set this field to “No” to hide the scroll bars.

■ **Allow Gesturing:** Set this field to “Yes” to enable the Gesturing “Pie” menu for use in the part view. Initiate the Gesturing Pie Menu by clicking/pressing and holding on a feature in the part view. The Gesture menu will appear with options for constructing features or for adding annotation to features in the part view. Set this field to “No” to disable the Gesture Pie menu.

■ **Highlight Parent Feature:** Set this field to “Yes” to enable feature highlighting for construction parents. When a distance is constructed between (2) circles, the distance is the child feature and the circles are the parent features. When enabled, this option will cause the circles to be highlighted when the distance construction is selected. When set to “No” no feature highlight will appear.

■ **Animate Selected Features:** Set this field to “Yes” to configure the software to animate selected features in the part view. Features selected either in the part view or selected from the feature list will cause the drawn feature in the part view to display as rotating dashed lines. Set this field to “No” to disable animated features.

■ **Display Size in Corner:** Set this field to “Yes” to display the size, in the selected units, of the current part view. Set this field to “No” to remove the size reading from the part view.

■ **Display Overview Map:** Set this field to “Yes” to enable a small part view thumbnail in the lower right corner of the part view window. This part view thumbnail will always display a full map of the current features.

5.15 Printouts

The “Print Settings” screen contains settings fields for the following Report Printing options:

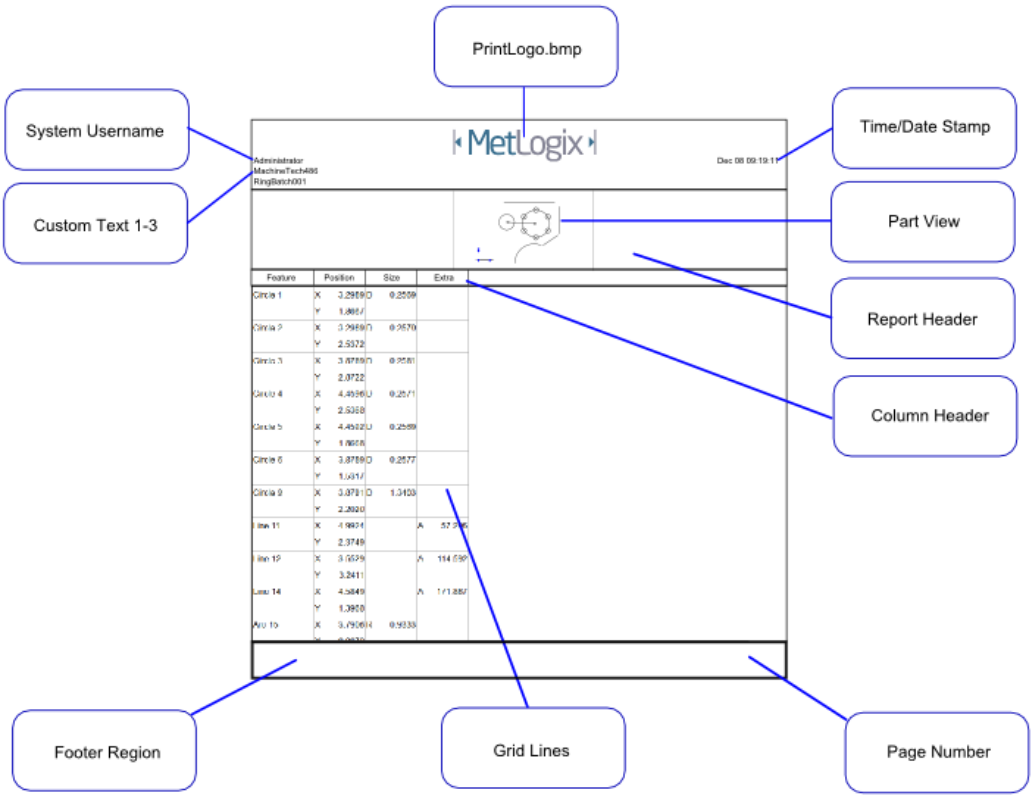

■ **Print Report Header:** Set this field to “Yes” to include the report header in your report printout. Additional items, listed below, will affect what items are included in the report header. Set this item to “No” to omit the report header from printed reports.

■ **Print Column Header:** Set this field to “Yes” to include column headers in report printouts. The column header labels the contents of a report column by category. Some examples are X, Y, Deviation, etc…Set this field to “No” to omit the column header from printed reports.

■ **Print Grid Lines:** Set this field to “Yes” to include grid lines on printed reports. Set this field to “No” to have the grid lines removed from printed reports.

■ **Print Report Name in Header:** The report name referred to for this option is the report format type. This is found at the top of the report screen. It will be Standard, CSV, or European. This report name can be displayed by setting this field to “Left”, “Right”, or “Center” depending on the desired location or can be removed from the report header by setting the field to “No”.

■ **Print Bitmap (PrintLogo.bmp) in Header:** Set this field to “Left”, “Center”, or “Right” to include a custom bitmap image in the desired location of the report header. Set this field to “No” to omit the custom bitmap from the report header. Place the desired custom bitmap image, with the file name “PrintLogo.bmp”, into the root location of your M3 software.

■ **Print User Name in Header:** Set this field to “Left”, “Center”, or “Right” to include the currently “logged-in” user name in the desired location of the report header. Set this field to “No” to omit the username from the report header.

■ **Print Date/Time in Header:** Set this field to “Left”, “Center”, or “Right” to include the system date and time in the desired location of the report header. Set this field to “No” to omit the date and time from the report header.

■ **Print Part View with Data:** Set this field to “Top”, “Bottom”, or “Watermark” to include an image of the current part view in the desired location of the printed report. Setting the field to “Watermark” will print an alpha blended part view image underneath the report data. Set this field to “No” to omit the part view image from printed reports.

■ **Print Page Number in Footer:** Set this field to “Yes” to print page numbers in the report footer. Page numbers will only be printed when there is more than one page in the report. Set this field to “No” to omit page numbers from the report footer.

■ **Printed Part View Height:** Set this item to the desired size of the part view to be included with the printed report. This item can be set to 25%, 50%, 75%, or 100% of the native size of the part view image.

■ **Print Custom Text in Header/Footer:** Enter custom alpha-numeric information into these fields to be displayed in the report header or Footer. Custom text entered into these fields will always be aligned left and bottom in the report header. Leaving these fields blank will omit custom text from the printed report.

■ **Prompt for Custom Text:** Set this field to “Yes” to configure the system to display the Custom Text Entry dialog for each printout execution performed. Use this custom text dialog to enter “Printout Specific” data to be included in the report printout header and footer.

5.16 Export

■ **File Name:** Use this alpha numeric data entry field to enter the desired base filename to be used for file exports. “Auto-Number” index numbers will be appended to this base file name when “Append” or “Auto Number” target file types are used.(see below)

■ **Include Column Headers:** Set this field to “Yes” to include column headers in exported data report files. Set this field to “No” to omit column headers from exported reports.

■ **Target File Type:** Set this field to “Append” to append exported data to the existing target file. Set this field to “Overwrite” to overwrite the target file with a new file on each data export. Set this field to “Auto Number” to create a new file on each export that increments, starting with the Auto number file name identified below.

■ **Auto Number File Name:** Set this field to the desired file export “auto-number”. This file number will be appended to either the default file name, or a custom file name(see above). The number will automatically increment when the target file type is set to “Auto Number”.

■ **Prompt for Settings on Each Export”:** Set this field to “Yes” to configure the software to display the Print Settings screen at each file export execution. When set to “No”, the current settings configured in this screen will be used at each file export execution.

5.17 Programs

■ **Auto Name on a Run Part:** Set this field to “Yes” to enable part program auto-save functionality. The auto-save functionality will automatically save a part program when it is “played back” the first time. The part name prefix(below) will be used as the base file name for this auto-save routine. When set to “No” the system will not automatically save a part program upon initial playback.

■ **Part Name Prefix:** Enter the desired base part file name to be used when the “Auto Name on Run Part” option is enabled(above). The next part auto number setting(below) will be used to automatically assign an index number to part programs generated(saved) using the Auto Name on Run Part feature.

■ **Next Part Auto Number:** Enter the desired starting index number to be used with the Auto Name on Part Run feature. Subsequent Auto Name saves will increment this number using the same defined base part name.

■ **Target Zone Radius (pixels):** Enter the desired target zone size to adjust the size of the target circle displayed as part of the program playback navigation system. Enter the desired size in pixels to either increase or decrease the size of the target circle for playback.

■ **Minimal Acceptable Measurement points (percent):** Enter a value to specify what percentage of the total number of recorded points is required to be collected in playback, for playback to advance. At the system default of 75%, a feature initially measured from 100 points requires that 75 points are collected in playback in order to advance the program.

■ **Always Allow Program Message:** When set to “Yes” the “Custom User Text” button will be available prior to entering playback or edits mode. This allows the user to “Record In” user message text during the initial creation of the part program. Message steps can also be added after the fact as part of a program edit routine.

■ **CNC Settling Time(For CNC enabled systems only):** Enter the desired value, in seconds, for the system to pause prior to entering points, at each stage position of playback. This can be thought of as a “dwell timer” for stage positioning in playback. It is important that stage potion, and image frame position be stable prior to collecting points data.

■ **Use Collision Avoidance:** Set this field to “Yes” to enable the Collision Avoidance playback functionality. When enabled, CNC programs in playback will always execute the Z direction move, prior to X and Y, when initiating a goto. This system may reduce the likelihood of part collision, during playback of programs with multiple part z heights.

■ **Automatically Save Part Program During Editing:** This settings enables/disables Auto Save Mode. In Auto Save mode changes to part programs are saved automatically when a new part or program closing is executed. When this function is disabled, a prompt will be called to confirm whether changes should be saved or discarded upon executing a new part, or closing the application.

■ **Manual Completion of Registration Features:** This setting toggles whether registration feature measurement requires “Done” button press to complete the feature measurement. When enabled, by setting to “Yes”, the Done button will be required to complete any feature measurement that is a registration feature, regardless of the number of points that were originally recorded for that measurement. When set to “No” registration feature measurements will be automatically completed when they reach the points required for successful measurement, as is the case for all features that occur after registration.

5.18 Desktop

The “Desktop” settings screen contains fields for customizing the appearance of your M3 software desktop.

■ **Display Measure View:** The “Measure View” setup item enables the DRO/feature detail display port. Set this item to be displayed to the left or right side of the main view port, or set to “No” to hide the measure view port.

■ **Display Part View:** The “Part View” setup item enables the part view display port. Set this item to be displayed to the left or right side of the main view port, or set to “No” to hide the part view port.

■ **Display Feature List:** The “Feature List” setup item enables the feature list display port. Set this item to be displayed to the left or right side of the main view port, or set to “No” to hide the feature list.

■ **Lock Window Layout:** When set to “Yes” the sizes of the view ports at the main M3 software desktop will be locked. When set to “No” re-sizing is permitted. Most view ports displayed at the main M3 software desktop can be resized. Press or Click and drag on the vertical view port dividers to resize the width of the left or right port panels. Press or click and drag on the horizontal view port divider to resize dual view ports on either the right or left view port panel.

■ **Display In/MM Button:** When set to “Desktop” the “In/MM” toggle button will be displayed in the toolbar at the top right of the Desktop. When set to “Extra” the “In/MM” toggle button will be displayed in the Extra menu. The extra menu button will be displayed when any of the display items are set to “Extra”. When set to “No” the “In/MM” toggle button will be hidden.

■ **Display DD/DMS Button:** When set to “Desktop” the “DMS/DD” toggle button will be displayed in the toolbar at the top right of the Desktop. When set to “Extra” the “DMS/DD” toggle button will be displayed in the Extra menu. The extra menu button will be displayed in the bottom toolbar when any of the display items are set to “Extra”. When set to “No” the “DMS/DD” toggle button will be hidden.

■ **Display Cart/Polar Button:** When set to “Desktop” the “Cart/Polar” toggle button will be displayed in the toolbar at the top right of the Desktop. When set to “Extra” the “Cart/Polar” toggle button will be displayed in the Extra menu. The extra menu button will be displayed when any of the display items are set to “Extra”. When set to “No” the “Cart/Polar” toggle button will be hidden.

■ **Display On-Screen Keyboard Button:** When set to “Desktop” the “Keyboard” button will be displayed in the toolbar at the top right of the Desktop. When set to “Extra” the “Keyboard” button will be displayed in the Extra menu. The extra menu button will be displayed when any of the display items are set to “Extra”. When set to “No” the “Keyboard” toggle button will be hidden.

■ **Display Feature Lock/Unlock Button:** When set to “Desktop” the “Feature Lock/Unlock” toggle button will be displayed in the toolbar at the top right of the Desktop. When set to “Extra” the toggle button will be displayed in the Extra menu. The extra menu button will be displayed in the bottom toolbar when any of the display items are set to “Extra”. When set to “No” the “Feature Lock/Unlock” toggle button will be hidden.

■ **Display” DisplayLogo.bmp”:** When set to “Yes” a bitmap file named “DisplayLogo.bmp” can be displayed in the top right of the M3 software desktop. The file to be used should be named “DisplayLogo.bmp” and placed in the root location of the M3 software. Set the Display “DisplayLogo.bmp” to “No” to hide the bitmap image.

■ **Display Reference Frame Button:** When set to “Desktop” the “Reference Frame” toggle button will be displayed in the toolbar at the top right of the Desktop. When set to “Extra” the toggle button will be displayed in the Extra menu. The extra menu button will be displayed in the bottom toolbar when any of the display items are set to “Extra”. When set to “No” the “Reference Frame” toggle button will be hidden.

■ **Default Home View:** Set this item to Video, Part View, or Data View to define what view type is used as the "Home" view. The selected "Home" view will be displayed when the Home button is pressed. This view type will also be displayed as the result of an encoder movement view switching mechanism.

■ **Height of List Items:** This setting configures the size of the displayed features in the feature list. This item can be set to small, medium, large, or extra large.

■ **Shutdown the Computer on Exit:** Set this item to "Yes" to configure the M3 software to shut down the computer upon exit.

■ **Display at Full Screen Size:** Set this item to "Yes" to display the M3 software in full screen mode. When set to full screen mode, the Windows 7/8/10 "window" elements will not be displayed. When set to "No" the Windows "window" elements, such as minimize, and resize buttons, will be displayed.

■ **"Switch to Home" Movement Threshold:** This setting will define the minimum amount of encoder position change required to trigger the switch to Home View mechanism in the M3 software. The entered value will use the unit type currently set as the display unit. Environmental vibration or encoder movement at rest, may require that this value be increased or decreased.

Note: For systems that initiate this screen switching mechanism without an intended stage movement, increase this value to prevent this undesired screen switching.

■ **Display Overlay button:** The M3 software can be configured to overlay the part view feature drawings, and their corresponding annotation, over the live video image. Enable Part View Overlay Button by setting the the flag to either Extra(add to Extra Menu) or Desktop(display button on desktop).

■ **Send:** When set to "Desktop" the "Send RS232" button will be displayed in the toolbar at the top right of the Desktop. When set to "Extra" the button will be displayed in the Extra menu. The extra menu button will be displayed in the bottom toolbar when any of the display items are set to "Extra". When set to "No" the "Send RS232" button will be hidden.

5.19 Display Formats

The "Display Formats" screen contains fields for configuring the properties of displayed values in the M3 software.

■ **Display resolution (mm, inch, decimal degrees and degrees/minutes/seconds):** is set by inputting the desired resolution into the corresponding display unit field. The display resolution set in this screen will determine the displayed resolution for values throughout the software. Feature Detail, Live DRO value and part view annotations will all be displayed according to this resolution setting.

■ **Current (in/mm, DD/DMS, Cart/Polar):** setting the current unit type for in/mm, DD/DMS, and Cart/Polar defines the default unit type used in the M3 software. This setting will govern the unit type used at the start of each M3 software session.

■ **Use Comma for Radix:** is used configure radix display to use commas or decimals. Set this item to "Yes" to display with comma separators, set to "No" to display with decimal point separators.

5.20 Sounds

-System events in the M3 software can produce various audio signals. The individual sound events can be enabled or disabled from the “Sounds” setup screen. Each sound event has both a description and an Enable field. Set any item to “No” to prevent the sound event from occurring.

5.21 Colors

-The color of various software elements and objects can be configured in the “Color” setup screen. Each customizable element is described in the “Description” field and can be set by selecting the item in the list and then choosing a color from the palette to the right of the setup screen. The currently set color for a given item can be viewed to the left of the given item.

5.22 Joystick (CNC Systems Only)

-Setting Course and Fine Velocity: Specify, in percentage of maximum velocity, the desired high and low speed settings to use for the connected joystick.

-Setting Joystick Direction: Invert the current joystick direction by toggling the “Reversed” Flag for each X,Y, and Z axis joystick control.

-Teach Joystick: Press the teach button, and follow the onscreen directions, to perform a calibration of the currently connected joystick. Current joystick ADC output can be observed using the mxcncoptions application.

-Save all CNC settings: Joystick calibrations are only stored in temporary settings memory. To save a joystick calibration to a system, so that it is retained across power cycles, press the “Save all CNC settings” button after calibrating.

6 Operating System/M3 Boot Settings

The M3 software is designed to be installed on computer systems running an existing Windows 7/8/10 /8/10 Operating Systems environment. The M3 software is launched via an executable file (.exe) and runs within the Win7 platform. There are Operating System, BIOS, and M3 Software optimizations that can prepare a system for a more "embedded-like" look and feel. The decision as to how to configure a system will be the result of several factors specific to a given hardware and software platform, customer requirements, and security and interoperability factors.

Windows 7/8/10 /8/10 BIOS Boot Settings

The following boot configuration changes are for use with the Windows 7/8/10 /8/10 operating systems. Some of the items below will pertain only to a specific BIOS type. In these cases consider the information below as a guide for optimizations that may also be supported in a different BIOS, where items mentioned below are found under different naming conventions or menu screens.

Changes to the Windows 7/8/10 /8/10 registry or system BIOS can cause serious PC or Operating System failures. Only make changes when you are confident about the area of the registry or BIOS that you are editing. It is recommended that individuals with experience in registry modification perform these changes. As always, Windows restore points and registry backups are recommended.

A) BIOS Settings

Most BIOS systems support a form of "quick boot" capability. Primarily these options disable certain routine hardware checks from being performed on every boot, thus improving boot speed. If you are aware of the machines motherboard manufacturer and model number, documentation can likely be found online for your motherboard. A motherboard user's guide may help to locate Boot Specific settings more quickly.

-Access the BIOS for your system and navigate to the BIOS Boot menu.

-Search for a boot item relating to "Enabling of Quick Boot" options.

-Enable Quick Boot, save BIOS changes, and exit the BIOS.

In addition, many BIOS systems allow for skipping various BIOS splash screens. Not displaying these screens during startup can also improve boot speed. This option would also likely be found in the BIOS boot menu.

B) Windows 7/8/10 /8/10 Settings

Set Windows to "No GUI boot" to remove the Windows opening launch screen using the following procedure:

-Type "msconfig" in the search/run field found at the bottom of the Windows Start Menu and press "Enter".

-The System Configuration window will appear. Select the "Boot" tab from this window.

-Put a check in the box next to the item labeled "No GUI boot". Click OK to close the "System Configuration" window.

Change the default windows background images to a custom image to help to disguise the login process and underlying operating system. One option is to set the Login Wallpaper, the Desktop Wallpaper, and the M3 software startup bitmap all to the same image. This will produce the effect of a more seamless boot process through Windows and into the automatic launch of the M3 software. The following procedures will describe how to change each of the 3 displayed images just described.

Begin by selecting the desired image to be used. It is recommended that the image size match the screen resolution that will be used on the PC to be configured. In addition, you will need a .bmp and .jpeg version of the image file.

Applying the custom Windows Login Image:

-Edit the following registry location to enable OEM custom background use.

[HKEY_LOCAL_MACHINE\SOFTWARE\Microsoft\Windows\CurrentVersion\Authentication\LogonUI\Background]

-Set the Value "OEMBackground" within this folder to "1" by right clicking on the value, selecting modify, and setting the Value Data to 1. Click OK, close the registry editor.

-Navigate to the folder C:\Windows\System32\oobe\info\backgrounds

-Place the desired image file, in .jpeg format into this folder.

-Rename the .jpeg file to "backgroundDefault".

The image file size should not exceed 256kb.

Applying the custom image to the Windows desktop

-Right-click on the Windows desktop, select "Personalize" from the menu.

-Select the "Desktop Background" link at the bottom of the screen.

-Select the "Browse" button and locate the desired custom image file in .bmp format.

-Set the "Picture Position" to "Center" from the list at the bottom of the screen.

Applying the custom image to the M3 software splash screen

-With the M3 software closed, locate the M3 software root folder location.

-Rename the file "Startup.bmp" to "10Startup.bmp".

-Place the new startup image file, in .bmp format, into the M3 root folder location.

-Rename the new image file to "Startup.bmp".

C) M3 Settings

Configure Windows to launch the M3 software automatically by locating the M3.exe file on your system.

-Create a shortcut to this file on the Windows desktop.

-Move the M3.exe shortcut from the Desktop to the Startup Folder in the Windows start menu.

-The M3 software will now launch automatically on Windows startup.

Boot the M3 software to the desired username automatically by accessing the “Security” setup screen from the M3 settings menu. The SuperAdmin, or Supervisor login must be used to configure specific user’s to login automatically.

-In the security settings screen, select the user display name you would like to configure for automatic login.

-Set the “Automatically login as this user” field to “Yes”. Press “Done” to exit setup.

-The M3 software will now bypass the user login screen, logging in the configured user automatically.

Configure the M3 software to shut down the PC on exit by accessing the “Desktop” settings screen in the M3 settings menu.

-Set the “Shutdown Computer on Exit” setting to “Yes”.

Configure the M3 software to launch to full screen mode by accessing the “Desktop” setting screen in the M3 settings menu.

-Set the “Set at full screen mode” setting to “Yes”. When set to “Yes” the M3 application will boot in full screen, removing the Microsoft window control buttons and borders.

7 Product Warranty

This product is warranted against defects in workmanship, material and design for two (2) years from date of delivery to the extent that METLOGIX will, at its sole option, repair or replace the product or any part thereof which is defective, provided, however, that this warranty shall not apply to products subjected to tampering or, abuse, or exposed to highly corrosive conditions.

THIS WARRANTY IS IN LIEU OF ALL OTHER WARRANTIES WHETHER EXPRESS OR IMPLIED AND METLOGIX HEREBY DISCLAIMS ALL OTHER WARRANTIES, INCLUDING, WITHOUT LIMITATION, ANY WARRANTY OF FITNESS FOR A PARTICULAR PURPOSE OR MERCHANTABILITY. METLOGIX SHALL NOT BE LIABLE FOR ANY INCIDENTAL OR CONSEQUENTIAL DAMAGES, INCLUDING, BUT NOT LIMITED TO, ANY ANTICIPATED OR LOST PROFITS.

This warranty is voidable if the purchaser fails to follow any and all instructions, warnings or cautions in the product's Instruction Manual.

If a manufacturing defect is found, METLOGIX will replace or repair the product or replace any defective part thereof without charge; however, METLOGIX's obligation hereunder does not include the cost of transportation which must be borne by the customer. METLOGIX assumes no responsibility for damage in transit, and any claims for such damage should be presented to the carrier by the purchaser.

8 SOFTWARE LICENSE AGREEMENT

NOTICE TO USER: PLEASE READ THIS AGREEMENT CAREFULLY. BY COPYING, INSTALLING, OR USING ALL OR ANY PORTION OF THE SOFTWARE, YOU ACCEPT ALL TERMS AND CONDITIONS OF THIS AGREEMENT, INCLUDING, IN PARTICULAR THE PROVISIONS ON: TRANSFERABILITY IN SECTION 4; WARRANTY IN SECTIONS 6 AND 7; LIABILITY IN SECTION 8; CONNECTIVITY AND PRIVACY IN SECTION 14; AND SPECIFIC PROVISIONS AND EXCEPTIONS IN SECTION 16. YOU AGREE THAT THIS AGREEMENT IS LIKE ANY WRITTEN NEGOTIATED AGREEMENT SIGNED BY YOU. THIS AGREEMENT IS ENFORCEABLE AGAINST YOU AND ANY LEGAL ENTITY THAT OBTAINED THE SOFTWARE AND ON WHOSE BEHALF IT IS USED; FOR EXAMPLE, IF APPLICABLE, YOUR EMPLOYER. IF YOU DO NOT AGREE TO THE TERMS OF THIS AGREEMENT, DO NOT USE THIS SOFTWARE.

METLOGIX AND ITS SUPPLIERS OWN ALL INTELLECTUAL PROPERTY IN THE SOFTWARE. THE SOFTWARE IS LICENSED, NOT SOLD. METLOGIX PERMITS YOU TO COPY, DOWNLOAD, INSTALL, USE, OR OTHERWISE BENEFIT FROM THE FUNCTIONALITY OR INTELLECTUAL PROPERTY OF THE SOFTWARE ONLY IN ACCORDANCE WITH THE TERMS OF THIS AGREEMENT. USE OF SOME METLOGIX AND SOME NON-METLOGIX MATERIALS AND SERVICES INCLUDED IN OR ACCESSED THROUGH THE SOFTWARE MAY BE SUBJECT TO OTHER TERMS AND CONDITIONS TYPICALLY FOUND IN A SEPARATE LICENSE AGREEMENT, TERM OF USE OR "READ ME" FILE LOCATED WITHIN OR NEAR SUCH MATERIALS AND SERVICES.

THE SOFTWARE MAY CAUSE YOUR COMPUTER TO AUTOMATICALLY CONNECT TO THE INTERNET. SEE SECTIONS 14 AND 16 FOR ADDITIONAL INFORMATION.

THE SOFTWARE MAY INCLUDE TECHNOLOGY DESIGNED TO PREVENT UNAUTHORIZED USE AND COPYING. THIS TECHNOLOGY MAY CAUSE YOUR COMPUTER TO CONNECT TO THE INTERNET WITHOUT NOTICE ON INSTALL, LAUNCH, AND ON AN INTERMITTENT OR REGULAR BASIS THEREAFTER. ONCE CONNECTED, THE SOFTWARE WILL TRANSMIT INFORMATION TO METLOGIX VIA AN INTERNET CONNECTION. METLOGIX MAY USE THE TRANSMITTED INFORMATION, AS WELL AS OTHER INFORMATION YOU OUR THIRD PARTIES MAY PROVIDE TO US, TO DETECT OR PREVENT USE OF METLOGIX SOFTWARE THIS IS FRAUDULENT, NOT VALIDLY LICENSED, OR NOT USED IN ACCORDANCE WITH A VALID LICENSE. SOFTWARE THAT FAILS TO CONNECTO TO METLOGIX AND SOFTWARE THAT CONNECTS TO METLOGIX WHOSE USE IS FOUND TO NOT TO BE PERMITTED MAY OFFER ONLY LIMITED FUNCTIONALITY OR MAY NOT OPERATE AT ALL.

1. Definitions.

"MetLogix" means MetLogix, Incorporated, a Delaware corporation, 33 South Commercial Street, Manchester, New Hampshire 03101.

"MetLogix Runtime(s)" means MetLogix M3, MetLogix M2, MetLogix M1, MetLogix L3, MetLogix L2, MetLogix L1, MetLogix Test Builder, or MetLogix CFR21.

"Computer" means a virtual or physical computer device that accepts information in digital or similar form and manipulates it for a specific result based on a sequence of instructions.

"Internal Network" means a private, proprietary network resource accessible only by employees and individual contractors (i.e., temporary employees) or a specific corporation or similar business entity. Internal Network does not include portions of the Internet or any other network community open to the public, such as membership or subscription driven groups, associations, and similar organizations.

"Output File" means an output file you created with the Software.

"Permitted Number" means one (1) unless otherwise indicated under a valid license (e.g., volume license) granted by MetLogix.

"Software" means (a) all of the information with which this agreement is provided, including but not limited to: (i) all software files and other computer information.

2. Software License.

If you obtained the Software and any required serial number(s) from MetLogix or one of its authorized licensees (resellers) and as long as you comply with the terms of this Agreement, MetLogix grants you a non-exclusive license to install and use the Software in a manner consistent with its design and Documentation and as further set forth below.

2.1. Limited Use.

2.1.1. The Software, or portions of the Software, may allow installation and use without a serial number. If so, you may install but not use such non-serialized Software on any number of Computers as part of an organizational deployment plan. Further, you may install and use such non-serialized Software on any number of Computers for demonstration, evaluation, and training purposes only and only if any Output Files or other material produced through such use are used only for internal, non-commercial, and non-production purposes. You may not use such non-serialized Software after any applicable timeout period has ended, unless you input a valid serial number under Section 2.2 ACCESS TO AND USE OF ANY OUTPUT FILES CREATED WITH SUCH NON-SERIALIZED SOFTWARE IS ENTIRELY AT YOUR OWN RISK.

2.1.2. The Software, or portions of the Software, that are provided with a serial number designated for "evaluation purposes" or other similar designation (such as Software or a serial number supplied as "EVAL" under a separate ordering document) and that includes an expiration date ("Evaluation Software") may only be installed and used on Computers for demonstration, evaluation, and training purposes only and only if Output Files or other materials produced through such use are used only for internal, non-commercial, and non-production purposes. The Evaluation Software will automatically time out with or without prior notice. You may not use such Evaluation Software after any applicable time-out period has ended, unless you input a valid serial number under Section 2.2 ACCESS TO AND USE OF ANY OUTPUT FILES CREATED WITH SUCH NON-SERIALIZED SOFTWARE IS ENTIRELY AT YOUR OWN RISK.

2.1.3. General Use. Except as described otherwise herein, you may install and use one (1) copy of the Software in accordance with the Documentation only on the Permitted Number of your compatible Computers into which you enter a valid serial number.

2.1.4. Distribution from a Server. The Software may not be distributed from a Server or an Internal Network.

2.1.5. Dual Boot Platform. The Software is licensed for use on a specific operating system platform. You must purchase a separate license for use of the Software on each operating system platform.

2.1.6. Documentation. You may make copies of the Documentation for your own internal use in connection with use of the Software in accordance with this Agreement but no more than the amount reasonably necessary. Any permitted copy of the Documentation that you make must contain the same copyright and other proprietary notices that appear on or in the Documentation.

3. Intellectual Property Ownership.

The Software and any authorized copies that you make are the intellectual property of and are owned by MetLogix Incorporated. The structure, organization, and source code of the Software are the valuable trade secrets and confidential information of MetLogix Incorporated. The Software is protected by law, including but not limited to the copyright laws of the United States and other countries, and by international treaty provisions. Except as expressly stated herein, this Agreement does not grant you any intellectual property rights in the Software and all rights not expressly granted are reserved by MetLogix Incorporated.

4. Restrictions and Requirements.

4.1. Notices. Any permitted copy of the Software that you make must contain the same copyright and other proprietary notices that appear on or in the Software.

4.2. Use Obligations. You agree that you will not use the Software other than as permitted by this Agreement and that you will not use the Software in a manner inconsistent with its design or Documentation.

4.3. No Modifications. Except as expressly permitted in Section 2.7, 2.8 or 15, you may not modify, port, adapt, or translate the Software.

4.4. No Reverse Engineering. You will not reverse engineer, decompile, disassemble, or otherwise attempt to discover the source code of the Software.

4.5. No Unbundling. The Software may include various applications, utilities, and components, may support multiple platforms and languages, and may be provided to you on multiple media or in multiple copies. Nonetheless, the Software is designed and provided to you as a single product to be used as a single produce on Computers permitted by Section 2 and 15. You are not required to install all component parts of the Software, but you may not unbundle the component parts of the Software for use on different Computers. You may not unbundle or repackage Software for distribution, transfer, or resale.

4.6. No Transfer. YOU WILL NOT RENT, LEASE, SELL, SUBLICENSE, ASSIGN OR TRANSFER YOUR RIGHTS IN THE SOFTWARE, OR AUTHORIZE ANY PORTION OF THE SOFTWARE TO BE COPIED ONTO ANOTHER INDIVIDUAL OR LEGAL ENTITY'S COMPUTER EXCEPT AS MAY BE EXPRESSLY PERMITTED HEREIN. You may, however, permanently transfer all your rights to use the Software to another individual or legal entity provided that: (a) you also transfer (i) this agreement, (ii) the serial number(s), the Software affixed to medial provided by MetLogix or its authorized distributor, and all other software or hardware bundled, packaged, or pre-installed with the Software, including all copies, Updates, and Prior Versions (as defined in Section 5); (b) you retain no Updates, Prior Versions, or copies, including backups and copies stored on a Computer; and (c) the receiving party accepts the terms and conditions of this agreement and any other terms and conditions under which you purchased a valid license to the Software. NOTWITHSTANDING THE FOREGOING, YOU MAY NOT TRANSFER EDUCATION, PRE-RELEASE, EVALUATION SOFTWARE, OR NOT FOR RESALE COPIES OF THE SOFTWARE OR SOFTWARE OBTAINS UNDER A METLOGIX VOLUME LICENSE PROGRAM EXCEPT AS MAY BE EXPRESSLY PERMITTED BY METLOGIX WITH THE TERMS OF A VOLUME LICENSE PROGRAM.

4.7. No Service Bureau. You will not use or offer the Software on a service bureau basis.

4.8. MetLogix M Series Restrictions. You may not use MetLogix M Series software on any non-PC device or with any embedded or device version of any operating system.

5. Updates.

If the Software is an Update to a prior version of MetLogix software (the "Prior Version"), the following apply:

Your use of this Update is conditional upon your retention of the Prior Version. Therefore, if you validly transfer this Update pursuant to Section 4.6, you must transfer the Prior Version along with it. If you wish to use this Update in addition to the Prior Version, you may only do so on the same computer on which you have installed and are using the Prior Version. Any obligation that MetLogix may have to support Prior Versions may end upon the availability of this Update. No other use of the Update is permitted. Additional Updates may be licensed to you by MetLogix with additional or different items.

6. Limited Warranty.

MetLogix warrants to the individual or entity that first purchases a license for the Software for use pursuant to the terms of this agreement that the Software will perform substantially in accordance with the Documentation for the ninety (90) day period following receipt of the Software when used on the recommended operating system and hardware configuration. Non-substantial variation of performance from the Documentation does not establish a warranty right. This limited warranty does not apply to the following which are made available "AS-IS" and without warranty from MetLogix: patches, font software; pre-release (beta), trial, starter, evaluation, product sampler, and not for resale (NFR) copies of the Software including but not limited to Evaluation Software. All warranty claims must be made, along with proof of purchase, to MetLogix within such ninety (90) day period. If the Software does not perform substantially in accordance with the Documentation, the entire liability of MetLogix and its affiliates and your exclusive remedy will be limited to either, at MetLogix' option, replacement of the Software or refund of the license fee you paid for the Software (if any). THE LIMITED WARRANTY SET FORTH IN THIS SECTION GIVES YOU SPECIFIC LEGAL RIGHTS. YOU MAY HAVE ADDITIONAL RIGHTS UNDER LAW WHICH VARY FROM JURISDICTION TO JURISDICTION. METLOGIX DOES NOT SEEK TO LIMIT YOUR WARRANTY RIGHTS TO ANY EXTENT NOT PERMITTED BY LAW.

7. Disclaimer.

THE LIMITED WARRANTY IN SECTION 6 IS THE ONLY WARRANTY OFFERED BY METLOGIX, ITS AFFILIATES, AND SUPPLIERS AND IT STATES THE SOLE AND EXCLUSIVE REMEDIES FOR METLOGIX', ITS AFFILIATES', OR SUPPLIERS' BREACH OF THAT OFFERED WARRANTY. THE LIMITED WARRANTY IN SECTION 6 AND ANY STATUTORY WARRANTY AND REMEDY THAT CANNOT BE EXCLUDED OR LIMITED UNDER LAW ARE THE ONLY WARRANTIES APPLICBLE TO THE SOFTWARE. OTHER THAN THOSE OFFERED AND STATUTORY WARRANTIES APPLICABLE TO THE SOFTWARE, METLOGIX, ITS AFFILIATES, SUPPLIERS, AND CERTIFICATE AUTHORITIES DISCLAIM ALL WARRANTIES, CONDITIONS, REPRESENTATIONS, AND TERMS, EXPRESSED OR IMPLIED, WHETHER BY STATUTE, COMMON LAW, CUSTOM, USAGE, OR OTHERWISE AS TO ANY MATTER, INCLUDING BUT NOT LIMITED TO PERFORMANCE, SECURITY, NON-INFRINGEMENT OF THIRD-PARTY RIGHTS, INTEGRATION, MERCHANTABILITY, SATISFACTORY QUALITY, AND FITNESS FOR ANY PARTICULAR PURPOSE. OTHER THAN SUCH OFFERED AND STATUTORY WARRANTIES AND REMEDIES, METLOGIX, ITS AFFILIATES, SUPPLIERS, AND CERTIFICATE AUTHORITIES PROVIDE THE SOFTWARE AND ACCESS TO ANY WEBSITES, METLOGIX OR THIRD-PARTY ONLINE SERVICES, AND CERTIFICATE AUTHORITY SERVICES AS-IS AND WITH ALL FAULTS. THIS DISCLAIMER OF WARRANTY MAY NOT BE VALID IN SOME JURISDICTIONS. YOU MAY HAVE ADDITIONAL WARRANTY RIGHTS UNDER LAW WHICH MAY NOT BE WAIVED OR DISCLAIMED. METLOGIX DOES NOT SEEK TO LIMIT YOUR WARRANTY RIGHTS TO ANY EXTENT NOT PERMITTED BY LAW.

8. Limitation of Liability.

EXCEPT FOR THE EXCLUSIVE REMEDY OFFERED BY METLOGIX ABOVE AND ANY REMEDIES THAT CANNOT BE EXLCUDED OR LIMITED UNDER LAW, METLOGIX, ITS AFFILIATES, SUPPLIERS AND CERTIFICATE AUTHORITIES WILL NOT BE LIABLE TO YOU FOR ANY LOSS, DAMAGES, CLAIMS, OR COSTS WHATSOEVER INCLUDING ANY CONSEQUENTIAL, INDIRECT OR INCIDENTAL DAMAGES, ANY LOST PROFITS OR LOST SAVINGS, ANY DAMAGES RESULTING FROM BUSINESS INTERRUPTION, PERSONAL INJURY OR FAILURE TO MEET ANY DUTY OF CARE, OR CLAIMS BY THIRD PARTY, EVEN IF ANY METLOGIX REPRESENTATIVE HAS BEEN ADVISED OF THE POSSIBILITY OF SUCH LOSS, DAMAGES, CLAIMS, OR COSTS. IN ANY EVENT, METLOGIX' AGGREGATE LIABILITY AND THAT OF ITS AFFILIATES, SUPPLIERS, AND CERTIFICATE AUTHORITIES UNDER OR IN CONNECTION WITH THIS AGREEMENT WILL BE LIMITED TO THE AMOUNT PAID FOR THE SOFTWARE, IF ANY. THIS LIMITATION WILL APPLY EVENT IN THE EVENT OF A FUNDAMENTAL OR MATERIAL BREACH OR A BREACH OF THE FUNDAMENTAL OR MATERIAL TERMS OF THIS AGREEMENT
THE FORECOING LIMITATIONS AND EXCLUSIONS APPLY TO THE EXTENT PERMITTED BY APPLICABLE LAW IN YOUR JURISDICTION. THIS LIMITATION OF LIABILITY MAY NOT BE VALID IN SOME JURISDICTIONS. YOU MAY HAVE RIGHTS THAT CANNOT BE WAIVED UNDER CONSUMER PROTECTION AND OTHER LAWS. METLOGIX DOES NOT SEEK TO LIMIT YHOUR WARRANTY OR REMEDIES TO ANY EXTENT NOT PERMITTED BY LAW.

9. Export Rules.

You acknowledge that the Software is subject to the U.S. Export Administration Regulations and other export laws, restrictions, and regulations (collectively the "Export Laws") and that you will comply with the Export Laws. You will not ship, transfer, export, or re-export the Software, directly or indirectly, to: (a) any countries that are subject to US export restrictions (currently including, but not necessarily limited to, Cuba, Iran, North Korea, Sudan, and Syria) (each, an "Embargoed Country"), (b) any end user who you know or have reason to know will utilize them in design, development or production of nuclear, chemical or biological weapons, or rocket systems, space launch vehicles, and sounding rockets, or unmanned air vehicle systems (each, a "Prohibited Use"), or (c) any end user who has been prohibited from participating in U.S. export transactions by any federal agency of the U.S. government (each, a "Sanctioned Party"). In addition, you are responsible for complying with any local laws in your jurisdiction which may impact your right to import, export or use the Software. You represent and warranty that (i) you are not a citizen of, or located within, an Embargoed Country, (ii) you will not use the Software for a Prohibited Use, and (iii) you are not a Sanctioned Party. All rights to use the Software are granted on condition that such rights are forfeited if you fail to comply with the terms of this agreement.

10. General Provisions.

If any part of this Agreement is found void and unenforceable, it will not affect the validity of the balance of this Agreement, which will remain valid and enforceable according to its terms. This Agreement may only be modified in writing, signed by an officer of MetLogix, Inc. The English version of this Agreement will be the version used when interpreting or construing this Agreement. This is the entire Agreement between MetLogix and you relating to the Software and it supersedes any prior representations, discussion, undertakings, communications, or advertising relating to the

Software.

11. Notice to U.S. Government End Users.

11.1. For U.S. Government End Users, MetLogix agrees to comply with all applicable equal opportunity laws including, if appropriate, the provisions of Executive Order 11246, as amended, Section 402 of the Vietnam Era Veterans Readjustment Assistance Act of 1974 (38 USC 4212), and Section 503 of the Rehabilitation Act of 1973, as amended, and the regulations at 41 CFR Parts 60-1 through 60-60, 60-250, and 60-741. The affirmative action clause and regulations contained in the preceding sentence will be incorporated by reference in this Agreement.

12. Compliance with Licenses.

If you are a business, company, or organization, you agree that, in addition to any license compliance checking performed by the Software, MetLogix or its authorized representative have the right, no more than once every twelve (12) months, upon ten (10) days' prior notice to you, to inspect your records, systems, and facilities to verify that your use of any and all MetLogix software is in conformity with your valid licenses from MetLogix. For example, MetLogix has the right to those of your records useful to determine whether installations of the Software have, or have not, been serialized, and you shall provide such records to MetLogix promptly upon request by MetLogix. Additionally, you shall provide MetLogix with all records and information requested by MetLogix in order to verify that your use of any and all MetLogix software is in conformity with your valid licenses from MetLogix within thirty (30) days of MetLogix' request.

13. Peer to Peer Communications.

The Software may use your connection to a local area network, without additional notice, automatically connect to other MetLogix software and, in doing so, may indicate on the local area network that it is available for communication with other MetLogix software. These connections may transmit the IP Address of your connection to the local network but no personally identifiable information is ever transmitted or received through such network connections (except to the extent that IP addresses my be considered personally identifiable in some jurisdictions).

Trademarks

Windows is a registered trademark of Microsoft Corporation in the United States and/or other countries.

Automation and Metrology International, LLC
1-888-354-2525
auto-met.com