Encoder models

IBI 601
IBI 631
IBI 691

Mounting instructions

LEINE LINDE

1477730-01
1477730-00-A-01

Automation and Metrology International, LLC
1-888-354-2525 | sales@auto-met.com
8808 Tyler Blvd, Mentor, OH 44060 | Request a quote: auto-met.com

Contact

Leine & Linde AB
Västerportsvägen 20
645 42 Strängnäs
SWEDEN

www.leinelinde.com

T: + 46 152 265 00
Support: techsupport@leinelinde.se

Leine Linde is a Swedish company dedicated to development, manufacturing and sales of encoders, sensors, and system electronics, for demanding industrial applications all over the world. Some of the additional values offered by Leine Linde are our technical support and the possibility to supply products with express production service shipped within 24 hours.

On our website **www.leinelinde.com** you can find data sheets and other product information

Leine & Linde AB claims copyright on this documentation. It is not allowed to modify, extend or to hand over to a third party and/or copy this documentation without written approval from Leine & Linde AB.

Specifications and content in this document are subject to change without prior notice due to our continuous strive to improve functionality and performance of our products.

Contents

1. Risk of bodily injury 7
2. Risk of damage to the product 8
3. Parts of the product 10
4. Mechanical mounting 12
5. Electrical mounting 18
6. Certificates and approvals 20

The following models are covered by this mounting instruction:

IBI 601
IBI 631
IBI 691

Please observe that the illustrations may differ from the actual product, with regard to model, materials and colours, type of connections, etc.

1

Risk of bodily injury

1.1)

1.2)

Important before mounting begins:

1.1 Make sure the machine is at a standstill. The product is to be mounted on a rotating part that can cause bodily injury when in motion.

1.2 Switch off the power. Do not engage or disengage any encoder connections with live wires.

2

Risk of damage to the product

2.1)

2.2)

2.3)

2.4)

2.5)

2.6)

2.7)

The product is a precision measuring instrument. It should be handled with care. Mounting and commissioning is to be conducted by qualified personnel and in compliance with local safety regulations. The warnings below apply in the event of effects outside the limit values stated in the product's data sheet.

The product may be damaged

2.1 by ESD discharges if the electronics are touched
2.2 if it is exposed to high mechanical forces
2.3 by moisture or chemical fluids
2.4 if it is exposed to extreme temperatures
2.5 if it is exposed to powerful vibrations or shock
2.6 by short-circuits or an excessively high supply voltage
2.7 by impacts or knocks or other physical damage

The product may not be modified in any way.

3

Parts of the product

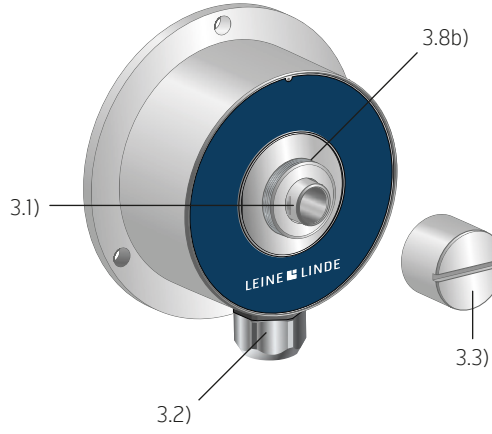

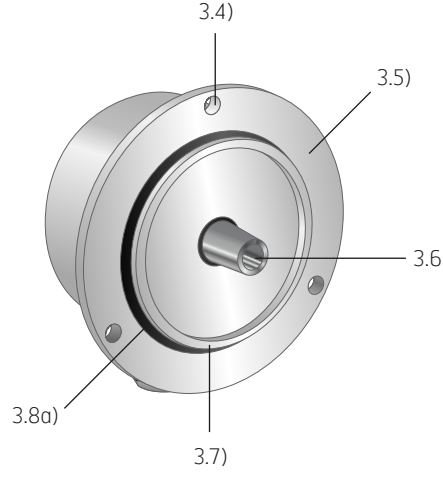

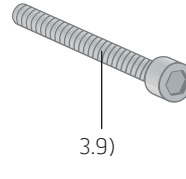

3.1 9 mm wrench grip
3.2 Cable gland
3.3 Protective cap
3.4 Fixing holes Ø4,5 mm x3
3.5 Flange
3.6 Tapered shaft 9,25 mm (1:10)
3.7 Alignment flange
3.8a O-ring Ø49 mm x 1,5 mm
3.8b O-ring Ø16 mm x 1 mm
3.9 Socket head ccp screw M4 x 40 mm
DIN EN ISO 4762-A2

4

Mechanical mounting

4.1)

A = Bearing of mating shaft
1 = Screw plug, width 2mm, tightening torque 2 ± 0.5Nm
2 = Screw ISO 4762 - M4 x 40-A2,
with material bonding anti-rotation lock,
tightening torque 2 ± 0.5Nm.
3 = Screw ISO 4762 - M4 x 10-A2,
with material bonding anti-rotation lock,
tightening torque 2 ± 0.5Nm
4 = Functional diameter of taper
5 = Chamfer is mandatory at start of thread for
materially bonding anti-rotation lock.
6 = Flange surface; ensure full-surface contact.
7 = Maximum permissible deviation between shaft and
flange surfaces.
Compensation of mounting tolerances and thermal expansions.
Dynamic motion permitted over entire range.
8 = M5 back-off thread.

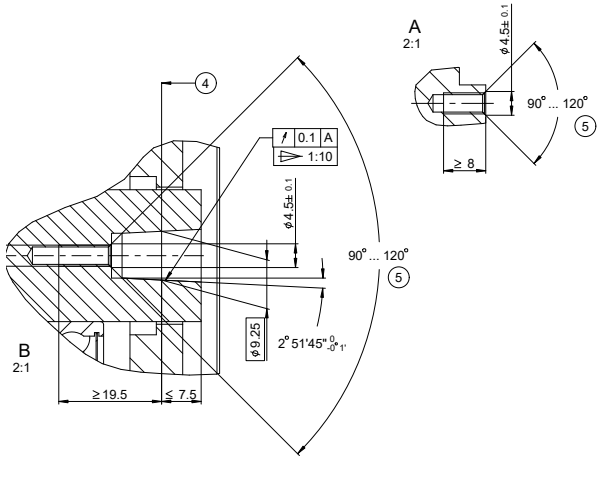

Hollow shaft

4.1 Check that the dimensions, tolerances and interface mechanics of the mating shaft match the specifications and ensure that the mounting surface is free from dirt and debris.

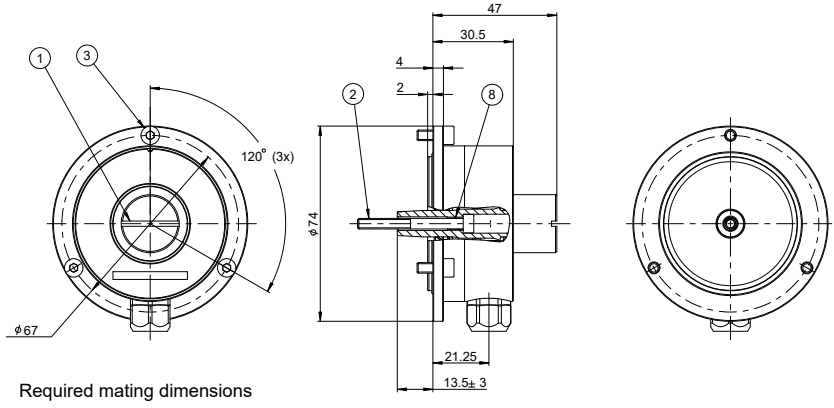

Required mating dimensions

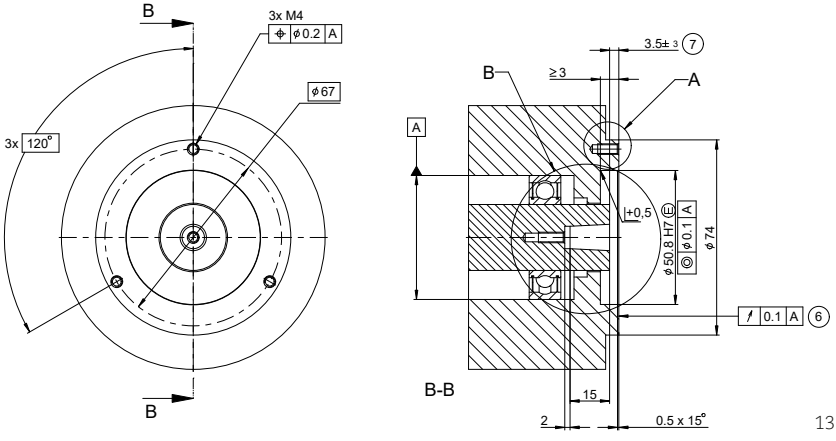

5

Mechanical mounting

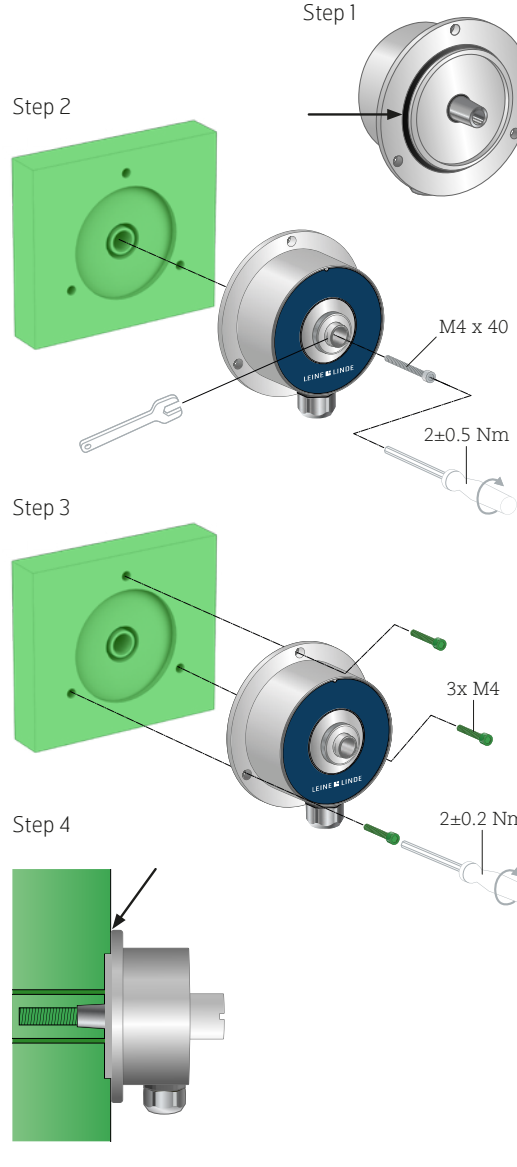

Mounting procedure

Step 1: Ensure that the o-ring is still in place.

Step 2: Use a 9 mm wrench to lock the encoder shaft while tightening the M4 x 40 screw. Add appropriate bonding anti-rotation lock, LOCTITE or similar. Tightening torque: 2±0.5 Nm.

Step 3: Fasten the encoder flange by using three M4 screws with appropriate length. Add appropriate bonding anti-rotation lock, LOCTITE or similar. Tightening torque: 2±0.2 Nm.

Step 4: Ensure that the encoder flange is uniformly mounted to surface.

Continued on next page.

Part from customer

Accessories from Leine Linde

Tools for mounting

5

Mechanical mounting

Step 5

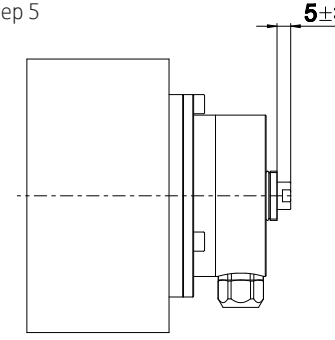

Step 6

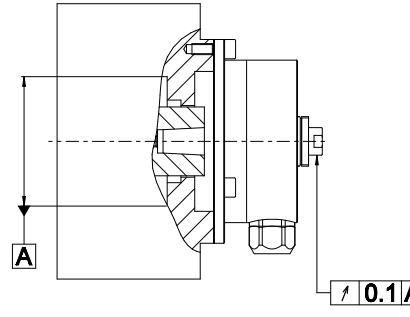

Step 7

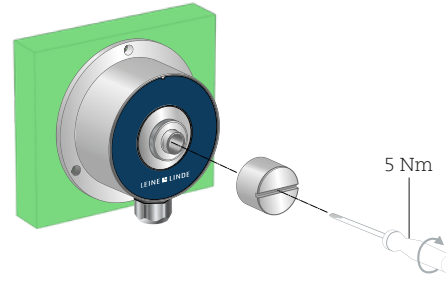

Mounting procedure continued

Step 5: Measure the shaft protrusion and ensure that it is within tolerances 5±3. The measurement indicates that the shaft is in the center of the accepted axial movement. **For correct mounting, the expected axial movement of the application needs to be taken into account.**

Step 6: Ensure that the radial run-out of the shaft is less than ±0.1 mm.

Step 7: Mount the protective cap. Tightening torque: 5 Nm. Recommended screwdriver: ISO 2380-2 X 1.6x10

Dismounting procedure

Step 1: Remove protective cap

Step 2: Remove 3xM4 screws on flange

Step 3: Use a 9 mm spanner on tapered shaft and unscrew the M4 socket head cap screw.

Step 4: Use an M5 screw in the tapered shaft to dismount the encoder.

6

Electrical mounting

6.1)

6.2)

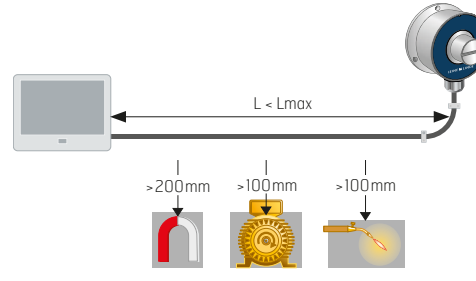

6.3)

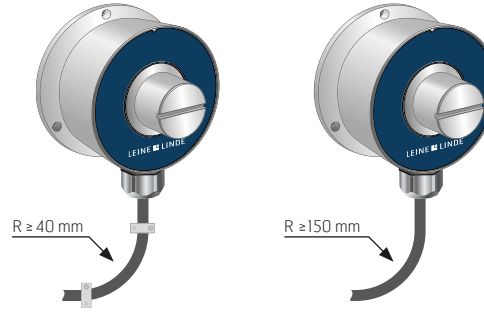

6.4)

6.1 Use a shielded twisted-pair cable. The shielding must be connected to the chassis at both ends and be earthed at one point.

6.2 Keep potential sources of disturbance at the recommended distance from the cable. Make sure that the length of the cable does not exceed the value specified in the product data sheet.

6.3 Ensure that the permissible temperature range is adhered to dependent on type of installation, static or flexible.

6.4 Treat all wires as live. Any wires not in use must be insulated.

7

Certificates and approvals

7.1)

7.2)

Leine Linde products conform to several standards and approvals. Certificates and documentation may be provided by your local Leine Linde representative upon request.

7.1 UL/CSA standards, type approval

Most Leine Linde products have been type tested in accordance with IEC 61010. The product box label states if the product conforms to the standard. When the product is operated in accordance with IEC 61010-1, the power must be supplied from an isolated secondary circuit with current or energy or power limitation as per IEC 61010-1, IEC 60950-1, or by a class 2 secondary circuit as specified in UL 1310.

7.2 CE marking and Declaration of conformity

Most Leine Linde products conform to the protection requirements of Council Directive 2014/30/EU related to EMC when applicable. The product box label states if the product conforms to the standard.

Products from Leine Linde are usually components in larger systems. These applications require the system as a whole to be tested, and do not depend on the component specifications only.

Instructions in these mounting instructions apply to products from Leine Linde, not for the system as a whole. If products are used in a way for which they are not intended, this is at the user's own risk.

Specifications in this document can be changed without prior notice.

This product is to be disposed of separately.

Automation and Metrology International, LLC
1-888-354-2525
auto-met.com