Issued : Apr. 2021
Service & Parts Dep.

SmartSCALE

SQ57

Installation manual

This manual is a reference material for easily and correctly mounting the SQ57 using a special jig.
Please use this manual when installing the SQ57 for the first time.
Please use this manual together with the instruction manual attached to the main unit.

Automation and Metrology International, LLC
8808 Tyler Blvd, Mentor, OH 44060
1-888-354-2525 | sales@auto-met.com
Request a quote: auto-met.com

Table of contents

1. Precautions for installation location 3

2. How to install the scale

2-1. Preparing the scale mounting bracket 5

2-2. Confirmation of scale and sensor head mounting surface 6

2-3. Installation procedure ① to ⑨ 7

3. How to check the scale signal

3-1. AC20-B100 Monitoring System 14

3-2. AC20-B100 Screen caption (Ver. 1.03.0) 15

3-3. When AC20 does not automatically recognize the scale 16

4. Installation using the positioning jig

4-1. Position of head bracket with respect to the positioning ji 17

4-2. How to install ① to ⑪ 18

5. Installation tool (option) 20

・How to use the clearance adjustment spacer(SZ29) 21

6. Dimensional diagrams of dedicated jig (Reference material)

Positioning jig(SQ57) 22

SZ30 (CH22/23 dedicated socket) processing dimensions 23

MEMO:
SQ57 has a structure in which the scale and the sensor head are separated. The machine side needs to satisfy the scale mounting tolerance within the range of effective scale length for the mounting posture of the scale and sensor head.
It is recommended to use the installation tool and positioning jig when installing.
By using the installation tool and positioning tool, you can easily and correctly install and check the installation status.

1. Precautions for installation location

Consider the following points when mounting the scale.

#1 Clearance of sensor head to scale surface

The clearance between the scale surface and the sensor head is kept constant

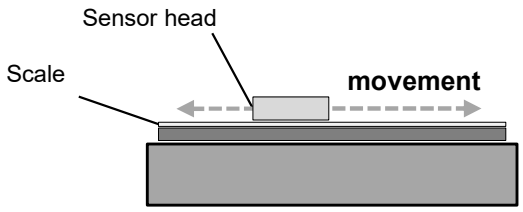

○

The clearance between the scale surface and the sensor head is not stable

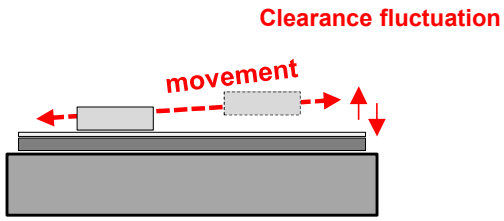

×

2 Roughness of scale mounting surface

Scale mounting standard is flat, no unevenness

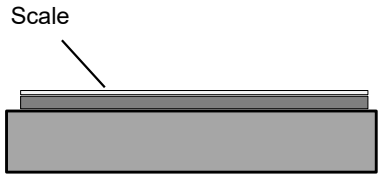

○

The mounting surface is uneven

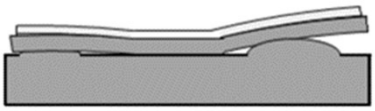

×

Mounting reference surface is curved

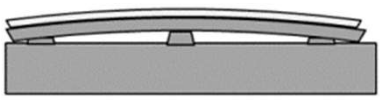

×

3 Securing the scale contact surface

A guideline for the characteristic frequency of the mounting bracket is 600 Hz or more
* Vibration analysis is also possible with CAD data of bracket

Contact surface is stable

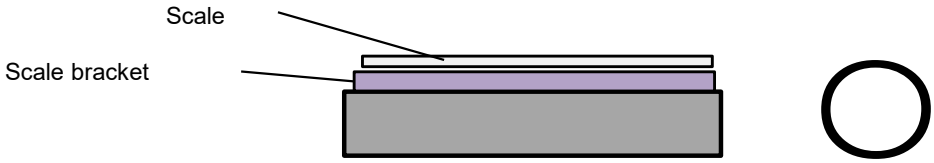

Overhang
Scale vibrates !

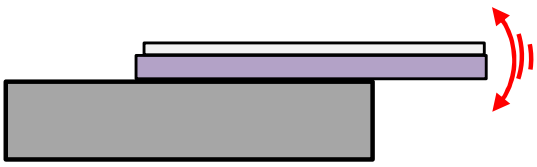

Scale vibrates !

2-point mounting

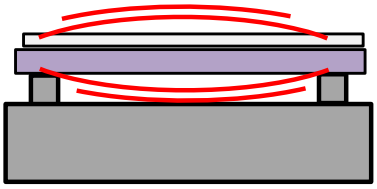

4 Rigidity of sensor head mounting bracket

A guideline for the characteristic frequency of the mounting bracket is 600 Hz or more
* Vibration analysis is also possible with CAD data of bracket

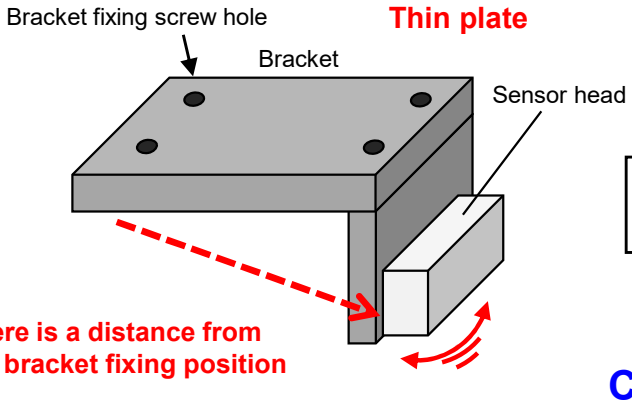

Insufficient rigidity

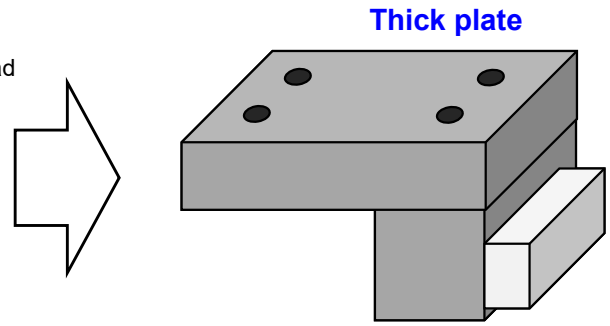

Countermeasure:

- ✓ **Make the plate thickness to increase the rigidity of the bracket**
- ✓ **Bring the bracket fixing position closer to the sensor head**
- ✓ **Larger fixing screw**

2. How to install the scale

2-1. Preparing the scale mounting bracket

Prepare the brackets required for installing the scale

Installation example

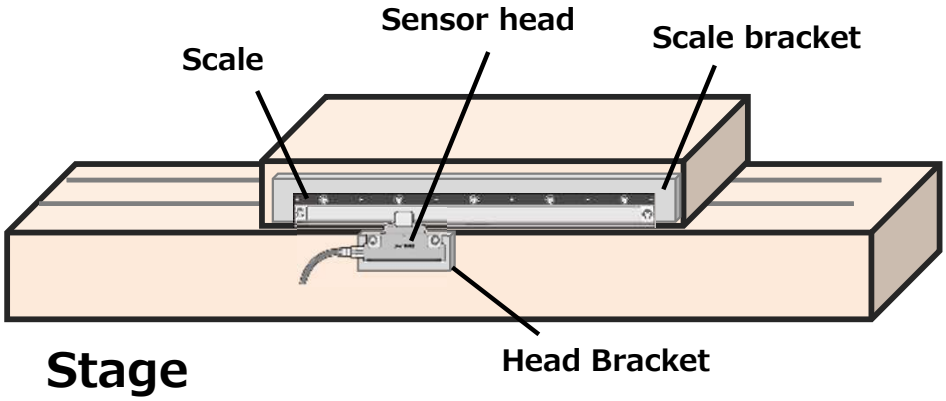

Installation example using parallel pins

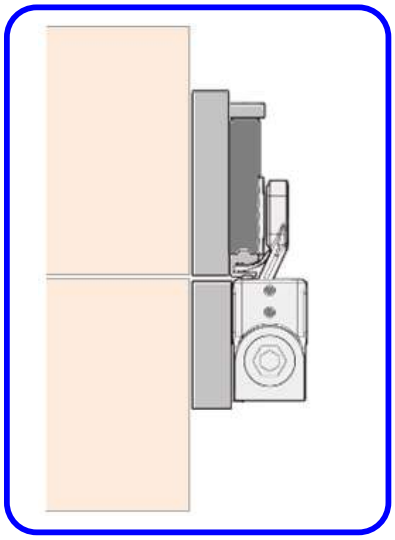

Combination view from the side

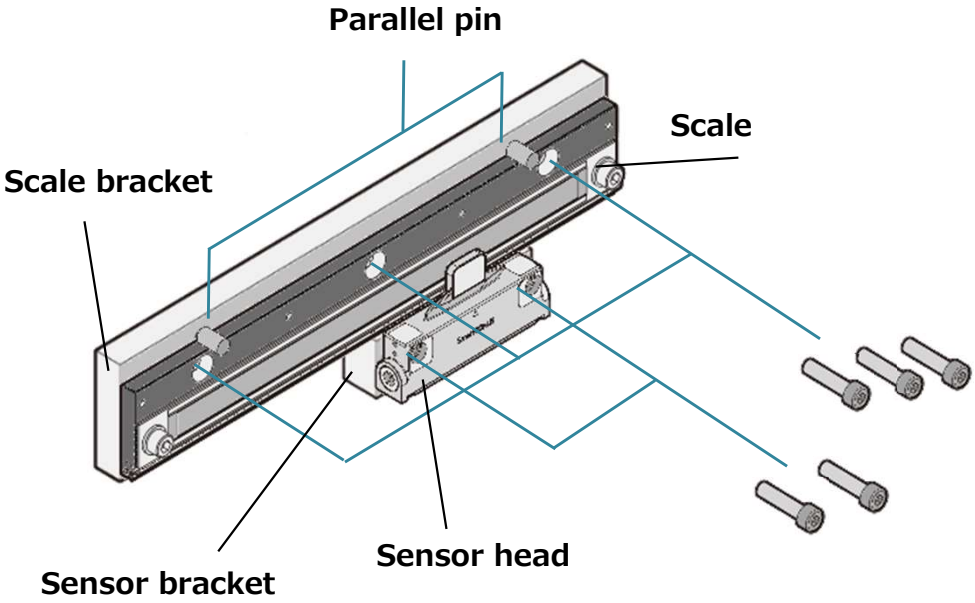

2-2. Confirmation of scale and sensor head mounting surface

For the scale mounting surface and sensor head mounting position (head bracket), consider the following allowable mounting values.

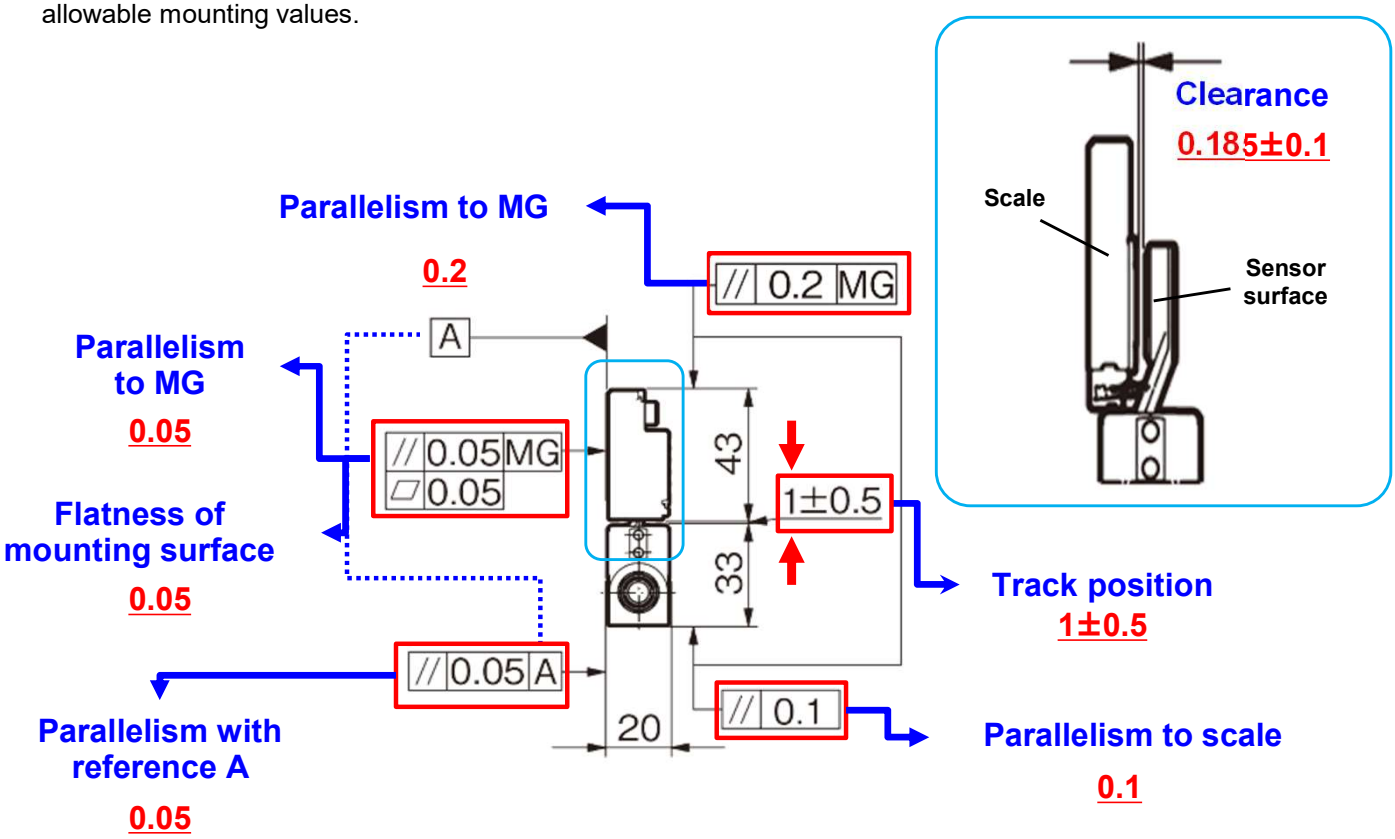

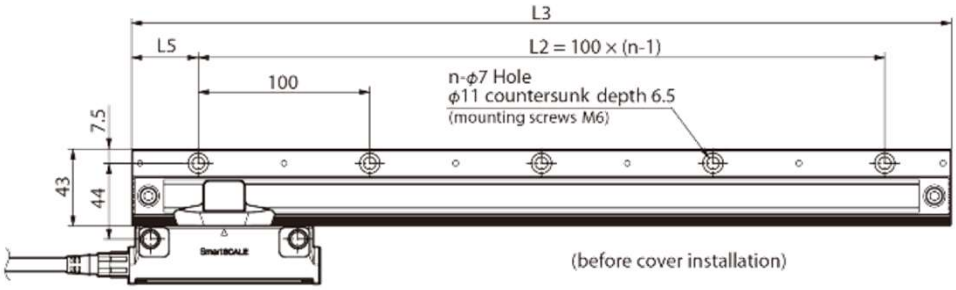

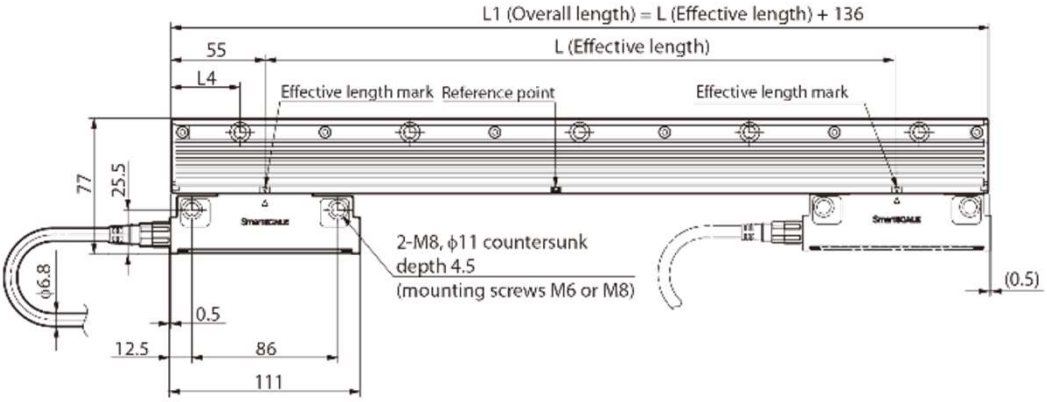

MG：Machine guide

Unit: mm

2-3. Installation procedure ① to ⑨

Step ①: Preparation of scale bracket

Make sure parallelism of the stop surfaces or parallel pins is within 0.1mm to MG (Machine guide) and parallelism of the scale mounting surface is within 0.05mm to MG.

<When using the stop surfaces>

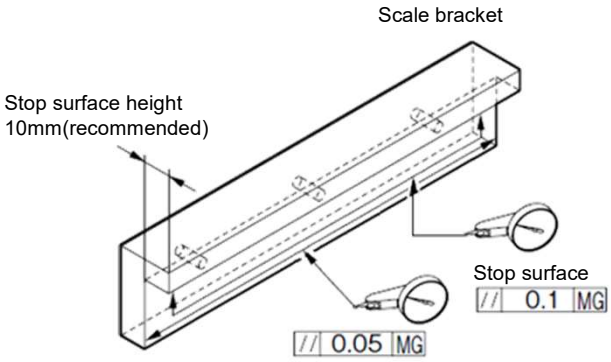

<When using parallel pins>

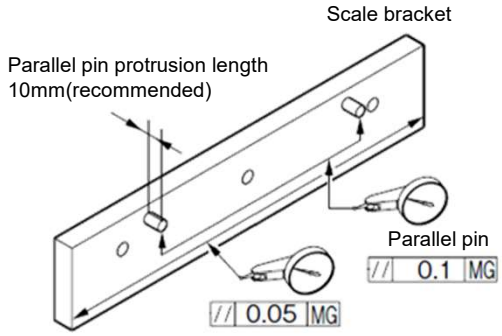

If the effective length is 1000 mm or less, Two φ 6 mm pins (38 mm from both ends of the scale) are recommended

Step ②: Preparation of sensor head bracket

Make sure parallelism of the effective area (100mm) of the sensor head bracket is within 0.05mm to MG or scale mounting surface.

<When using the stop surfaces>

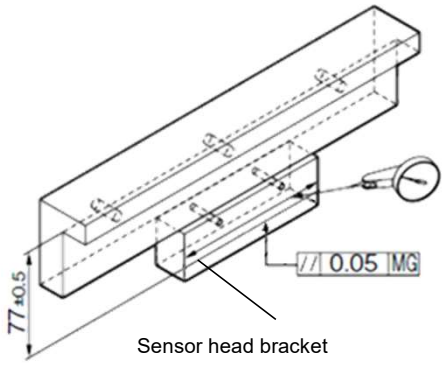

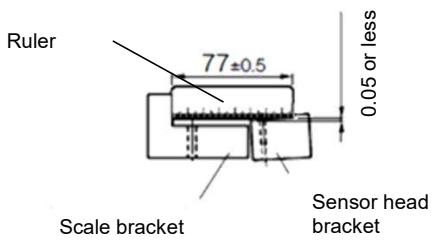

<When using parallel pins>

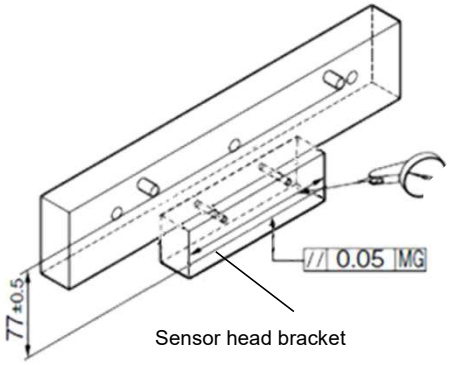

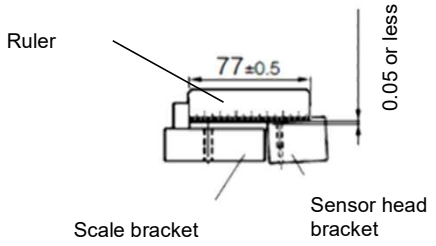

Step ③: Scale installation

Contact the scale to the stop surfaces or parallel pins and fix by the screws supplied with the scale unit.

Note: In case of use of other non-supplied screws , the screw head may project from mounting surface. Do not use a screw with large “R” or no screw threads at base part as shown below.

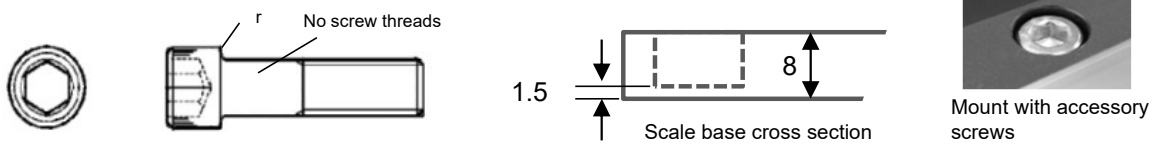

<When using the stop surfaces>

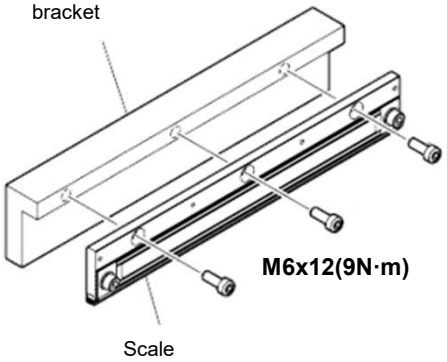

<When using parallel pins>

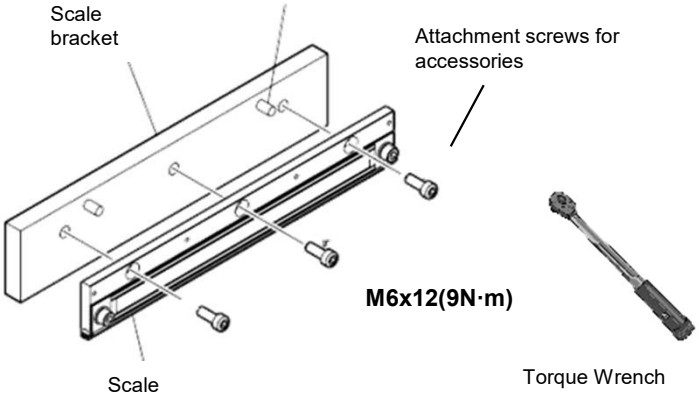

Step ④: Check the serial No. and peel the label off

Make sure that the serial numbers of the sensor head and scale are the same.
Please peel off the label after confirmation, otherwise the clearance confirmation will not be correct.

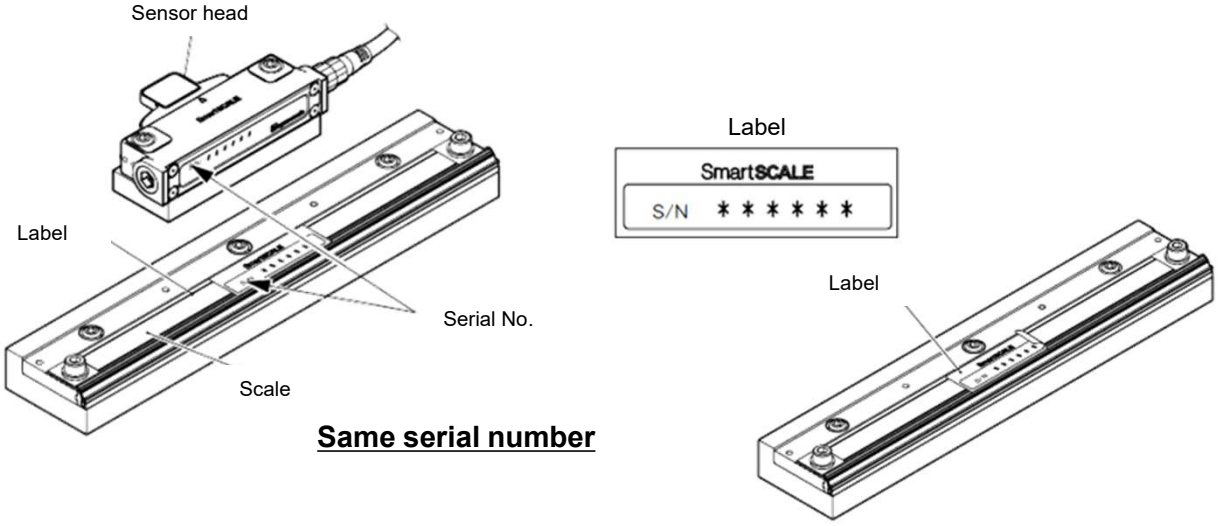

Note:
<u>If the combination has different serial numbers, it will not work properly.</u>

Step ⑤: Check the head bracket (Pitch and roll adjustment)

Adjust pitch and roll angle of a sensor head bracket to confirm within tolerance.

<When using the stop surfaces>

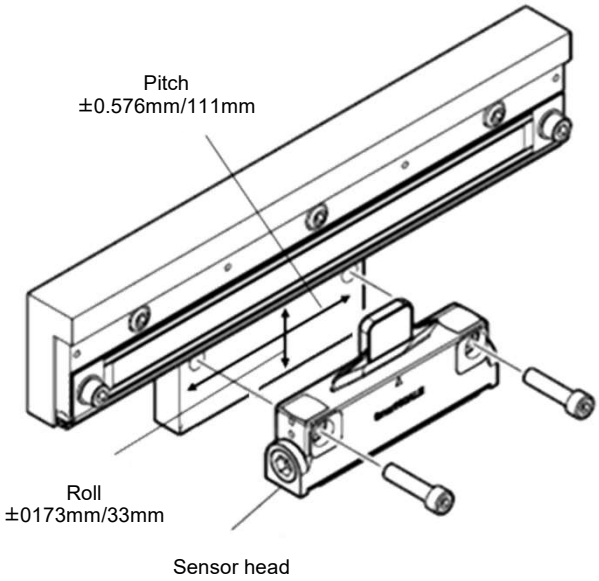

<When using parallel pins>

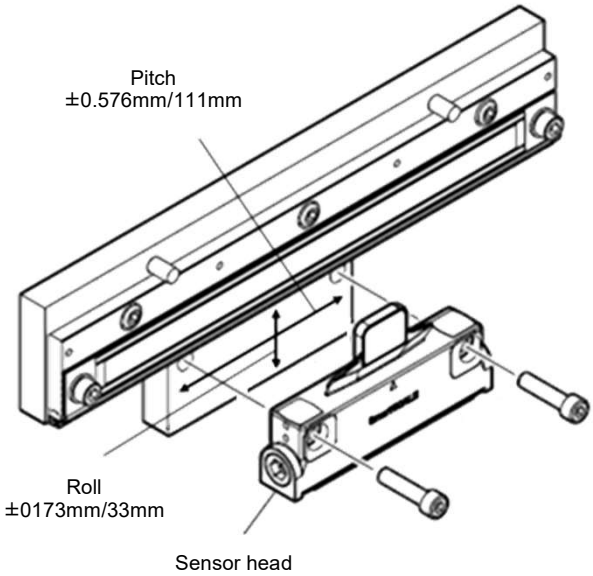

Sensor head mounting tolerance to the scale surface

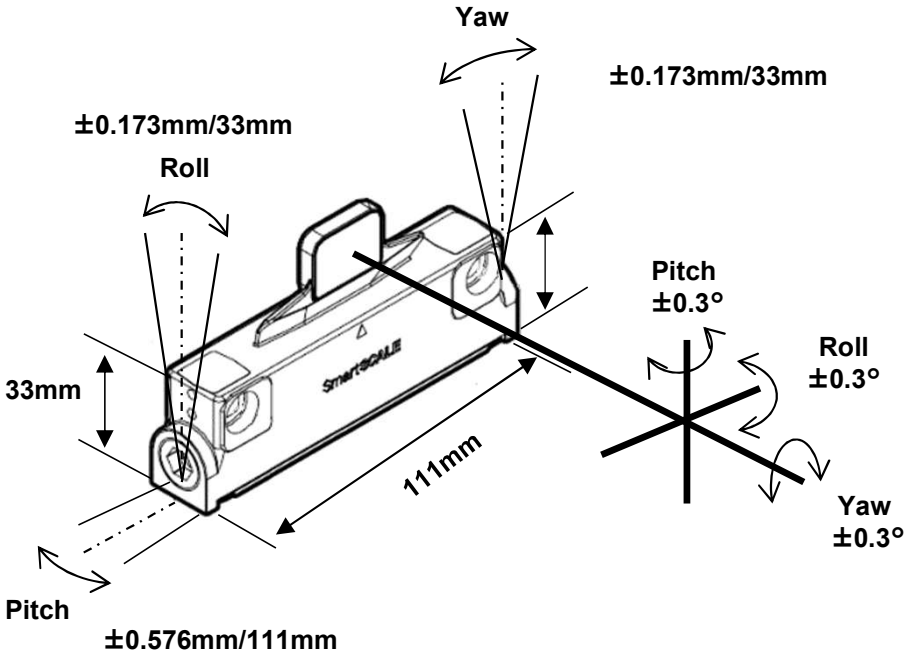

Step ⑥: Mount the sensor head (Clearance adjustment)

Adjust the clearance between the scale surface and the sensor head detecting part to 0.185 $^{+0.065}_{-0.085}$ mm with the clearance gauge t0.185mm (supplied with the scale unit).

A clearance adjustment shim SZ29 for level adjustment is available (sold separately).

<When using the stop surfaces>

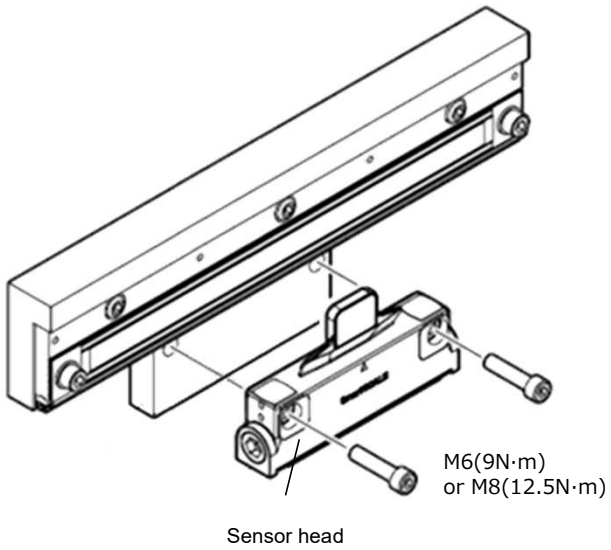

<When using parallel pins>

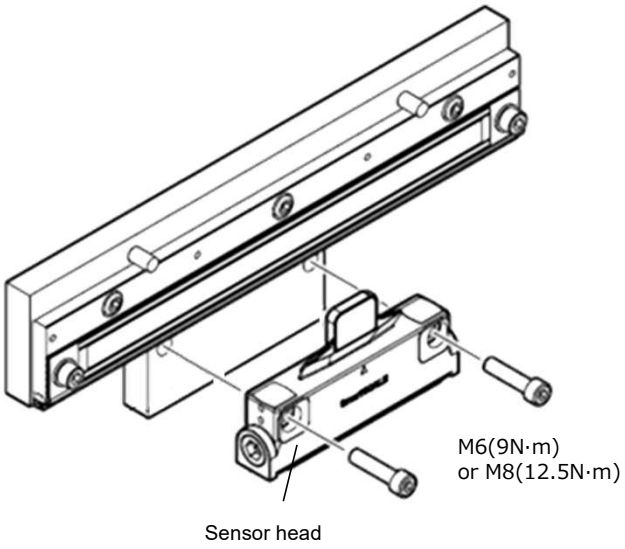

After adjusting with t0.185mm gauge, make sure **t=0.1mm gauge should enter the gap and t=0.25mm gauge should not enter the gap**.

<When using the stop surfaces>

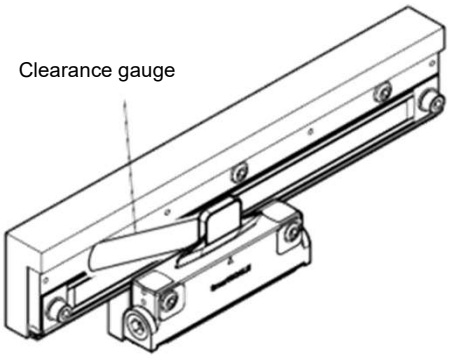

<When using parallel pins>

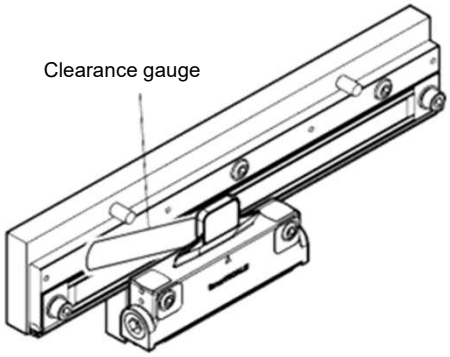

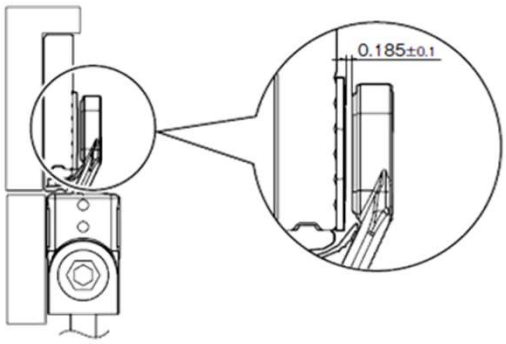

Clearance gauge
(supplied with scale unit)
(t=0.1,0.185,0.25mm)

SZ29
Clearance adjustment shim
(t=0.05/0.1/0.2mm)

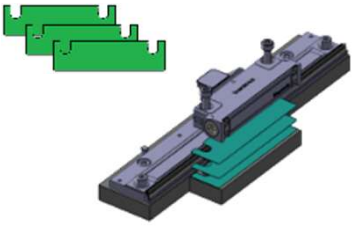

Step ⑦: Mount the sensor head (Track adjustment)

Since the position in the clearance direction was able to be adjusted at Step ⑥, next adjust track direction position to the scale and fix the sensor head.

Insert **a SZ27 or a SZ28 track positioning spacer t=1.0mm** between the scale base part and the sensor head. Next, contact the sensor head to the positioning spacer firmly and fix the sensor head. Then remove t1.0mm spacer and check **t=0.8mm spacer should enter the gap and t=1.2mm spacer should not enter the gap**.

Combination view from the side

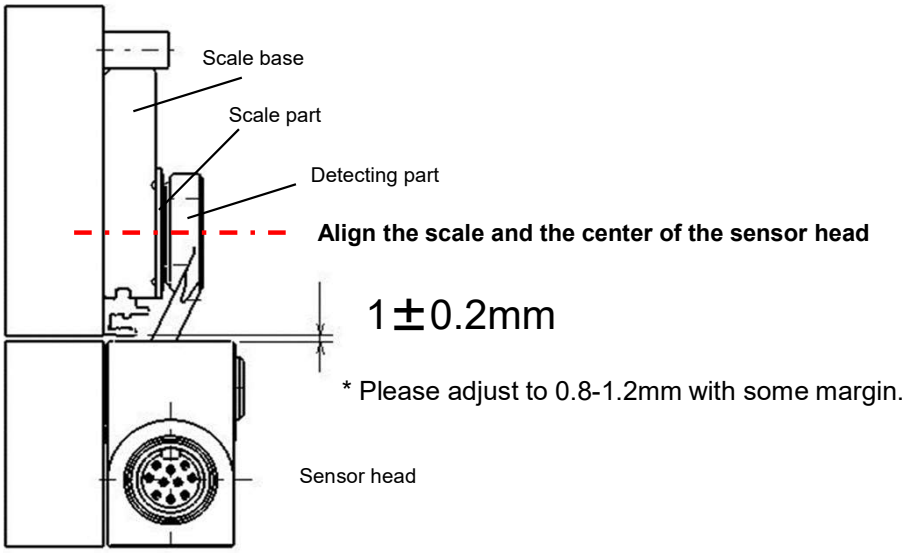

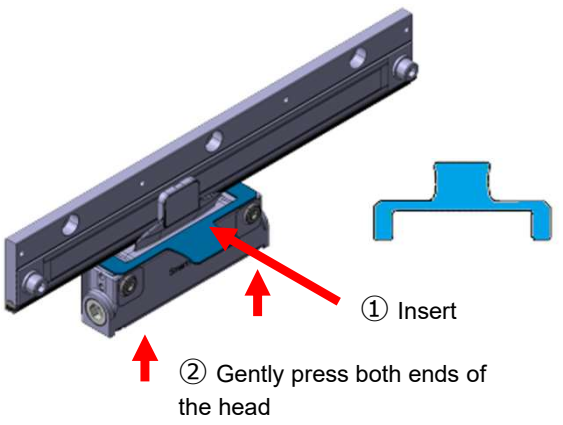

SZ27

Track positioning spacer:

t=1.0 (Center)

t=0.8 (Lower limit)

t=1.2 (Upper limit)

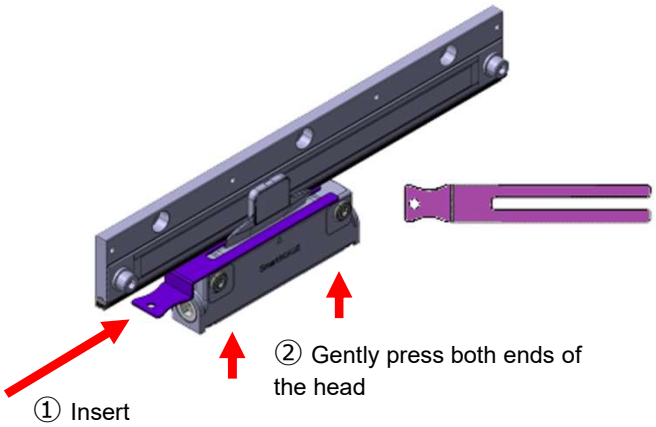

SZ28

Track positioning spacer:

t=1.0 (Center)

t=0.8 (Lower limit)

t=1.2 (Upper limit)

Step ⑧: Connect the cable

Remove the waterproof cap and connect the connection cable. (Waterproof cap 5mm across flats)
Before tightening the connector, make sure that the two O-rings have not come off.
(If the O-ring is dropped, waterproofness will be significantly reduced.)
Place the cable-side connector against the sensor head connector in a straight line, align the mating key, and insert it.

- Tighten the connector with the specified tightening torque.
- If the connector is not tightened sufficiently, there is a possibility that coolant may enter through the gap.
- Do not over-tighten the connector with excessive torque, otherwise the connector may be damaged.

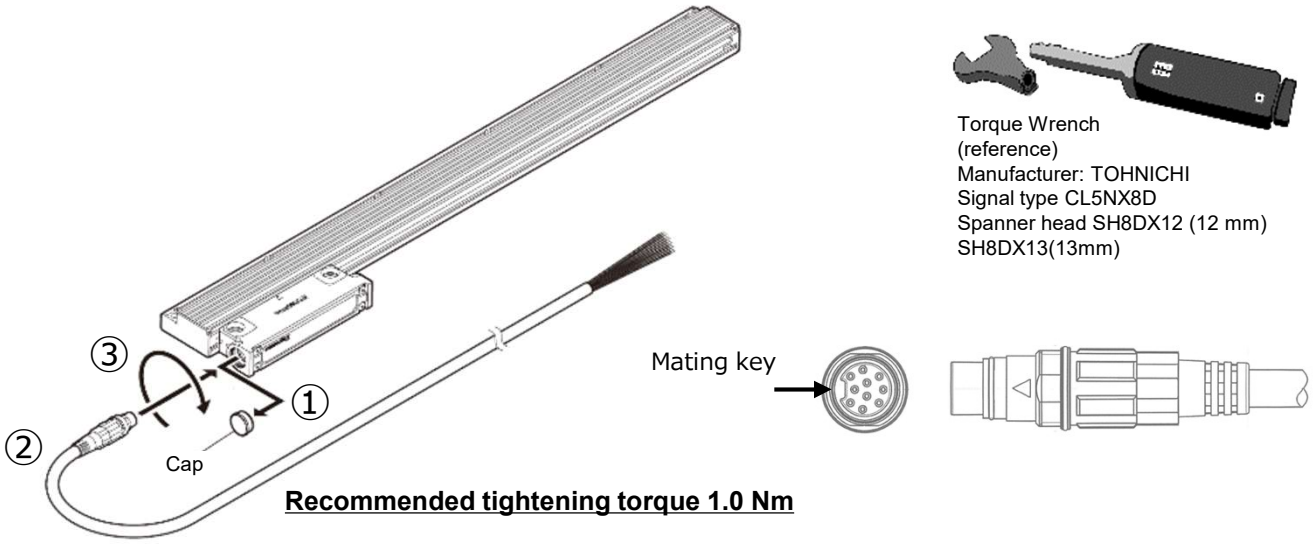

Recommended tightening torque 1.0 Nm

Make sure it has two O-rings!

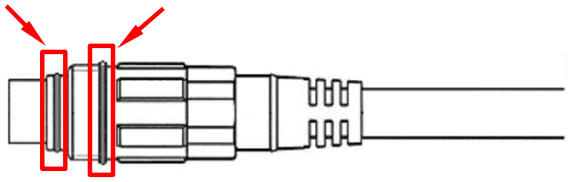

Connector part

Connector diameter

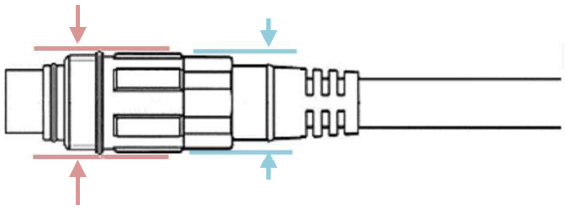

When there is no space to use a torque wrench

Please use the installation tool SZ30 (CH22/23 dedicated socket) that is used by combining the torque driver and socket adapter.

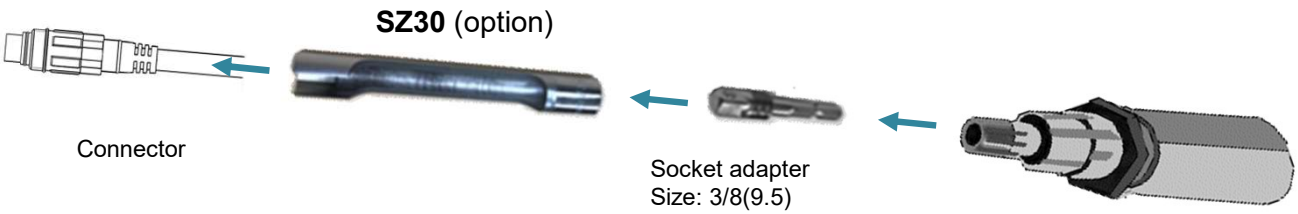

Step ⑨: Mount the scale cover

Install the scale cover on the scale.
Mount the scale cover by bringing the cover into contact with the stop surfaces or parallel pins of the bracket.
Make sure the lip seal of the scale cover is toward the outside.

<When using the stop surfaces>

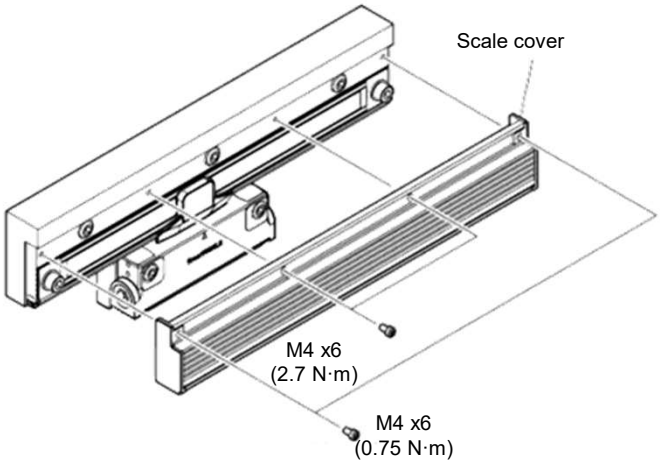

<When using parallel pins>

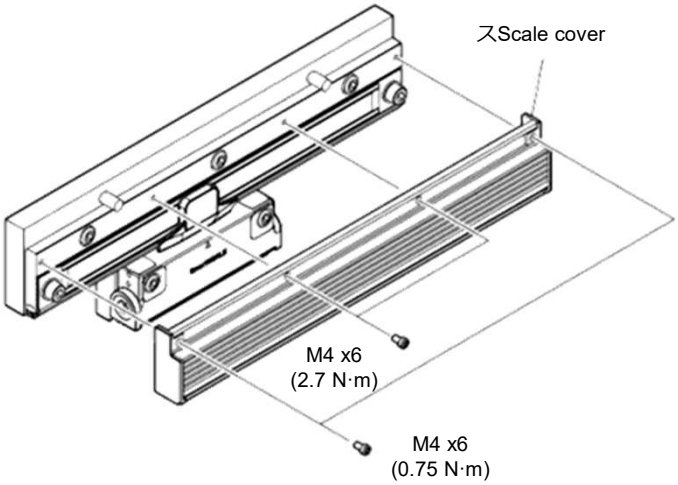

Pay attention to the screw tightening torque on both ends of the cover. Tightening with excessive torque may damage the resin plate.

Vertical position of lip seals

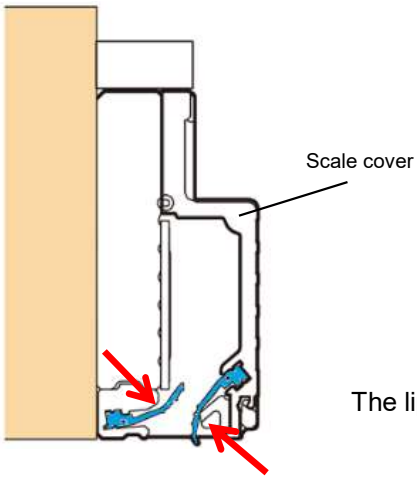

The lip seal on the scale cover side is outside

3. How to check the scale signal

3-1. AC20-B100 Monitoring System

To check scale signal, the AC20-B100 (sold separately) is used.
Need to install the software prior to use. Please refer the AC20 instruction manual for details.
Needs a special adaptor cable to connect with the scale as well.

AC20-B100 signal checking tool

Adaptor cable
CE35-02 (for Mitsubishi control)
CE36-02 (for Fanuc control)
CE36-02T01(for Yasukawa control)
CE37-02 (for Siemens DQ control)

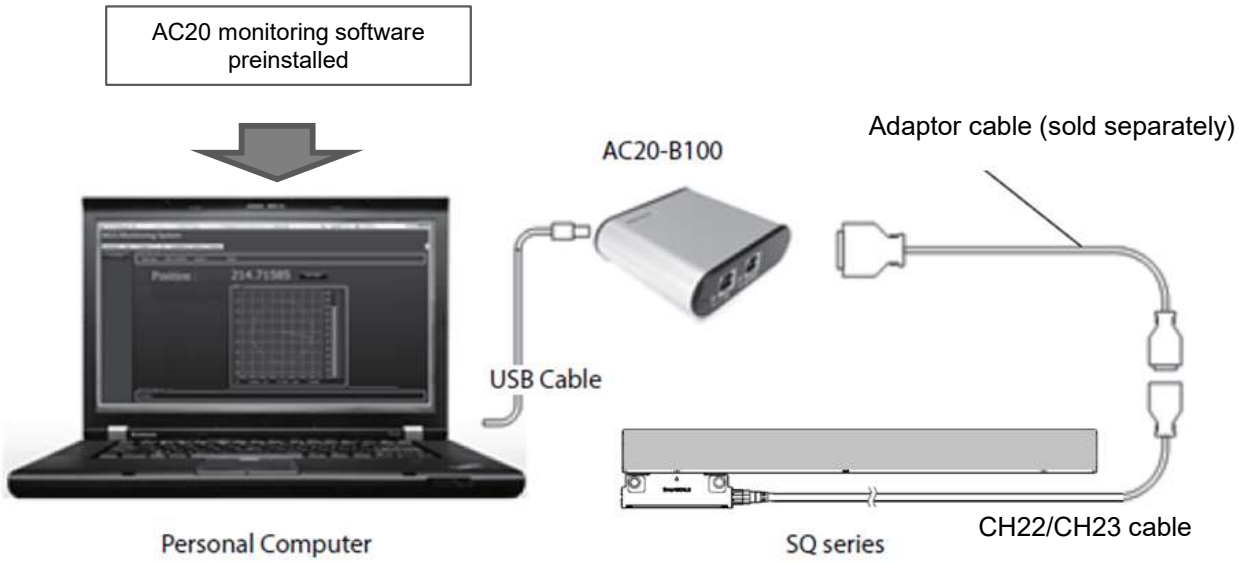

System requirement

Item	Environment
CPU	Intel Core i3 or higher
RAM	1GB or higher
OS	Windows 7 (32bit/64bit) Windows 10 (32bit/64bit)
Display	1080 x 800 pixels or higher
USB	2.0

3-2. AC20-B100 Screen caption (Ver. 1.03.0)

Scale signal (Lissajous waveform), sensor head clearance and alarm status can be checked by a AC20-B100.

Head clearance condition for overall length can be monitored by the bar graph. **Make sure red indication does not appear.**

■ Procedure at the starting: All connections with AC20 ⇒ [Power supply switch] ON ⇒ [Measuring switch] ON

■ Procedure at the end: [Measuring switch] OFF ⇒ [Power supply switch] OFF ⇒ Remove the scale connection cable

*Power is supplied to the scale from AC20. Use two USB cables to prevent power shortage.
*AC20 automatically recognizes the scale when it starts, but if it does not, refer to the next page for operation.

Model selection tab

Power supply switch to scale
White letters: OFF
Blue letters: ON
*Number is AC20 serial number

Scale information:
Model
Serial number
Communication protocol

Clearance characteristics: You can check the approximate clearance between the sensor head and scale.
Consider that the center is 185um, the upper limit is 285um, and the lower limit is 85um.

Signal strength indicator

Software version

Current position

Screen capture button:
Save the image data on the desktop of the PC

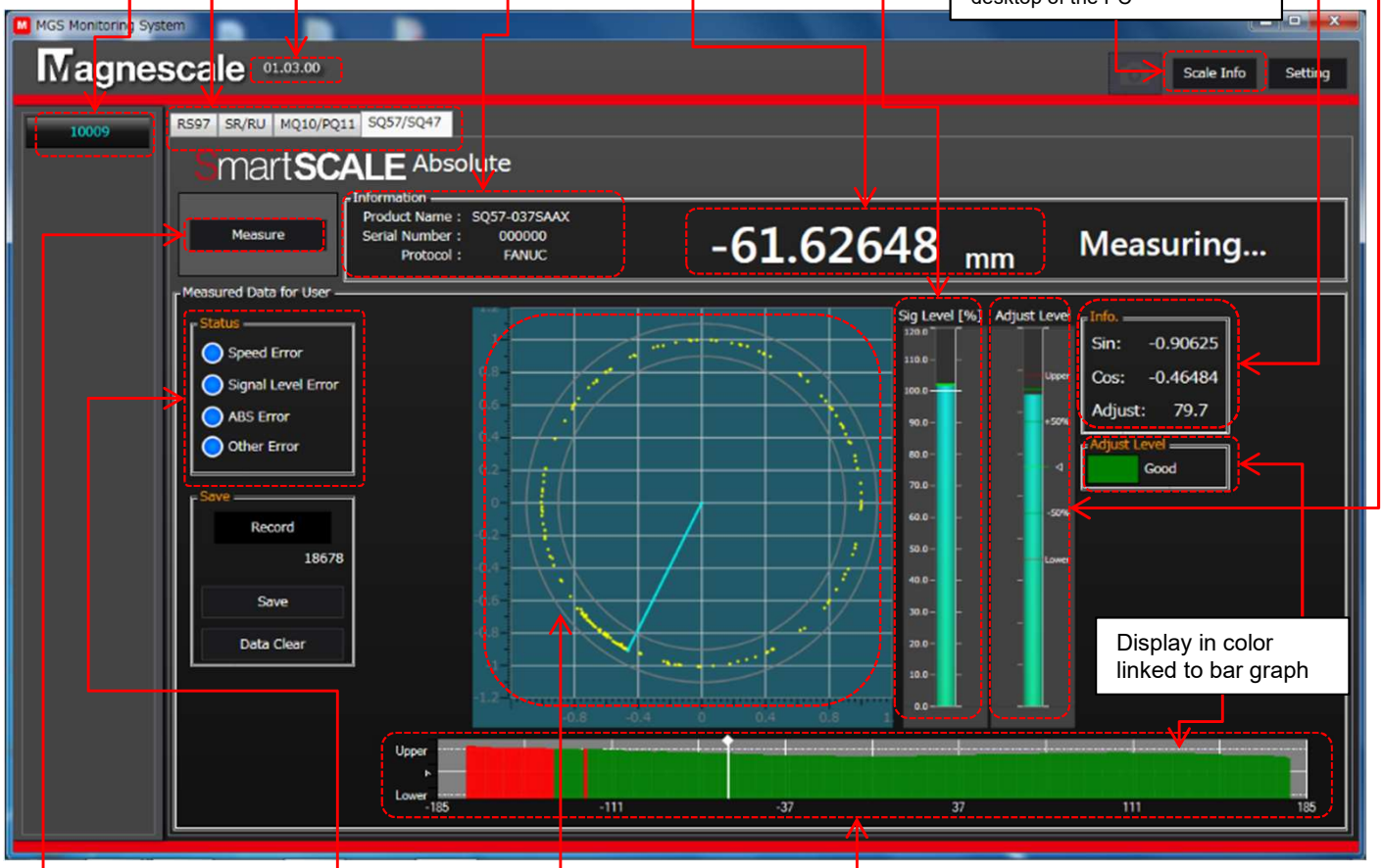

Display in color linked to bar graph

Alarm information:
-Speed over
-Signal level drop
-ABS error
-Other errors (ABS)

Clearance status for the position on the scale:

Green: Appropriate range (approx. 185±100um)

Red: Outside the appropriate range (approximately 85um or less or 285um or more)

*The white arrow indicates the current position

Measurement switch:
Start /Stop

Scale signal (Lissajous waveform):
It is normal when there is a signal between the two circles on the screen.

3-3. When AC20 does not automatically recognize the scale

AC20 may not recognize the connection scale automatically.

1. If AC20 version is old ⇒ Install new version
2. If the scale model is not a standard product ⇒ Enter the scale model name and let AC20 recognize it

If automatic recognition is not performed, the screen for entering the following scale information will appear immediately after the [Power supply switch] is turned on.
On this screen, AC20 recognizes the scale by inputting all the scale model names with a hyphen.

【Procedure】

① Screen that appears when AC20 does not automatically recognize the connection scale

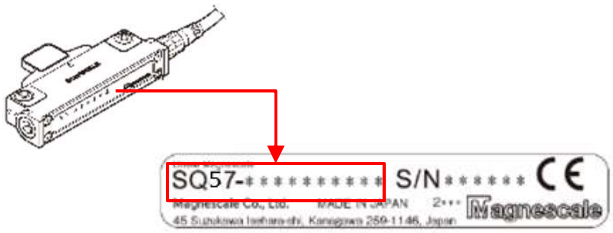

Confirmation of scale model name

Enter the model name information of the scale

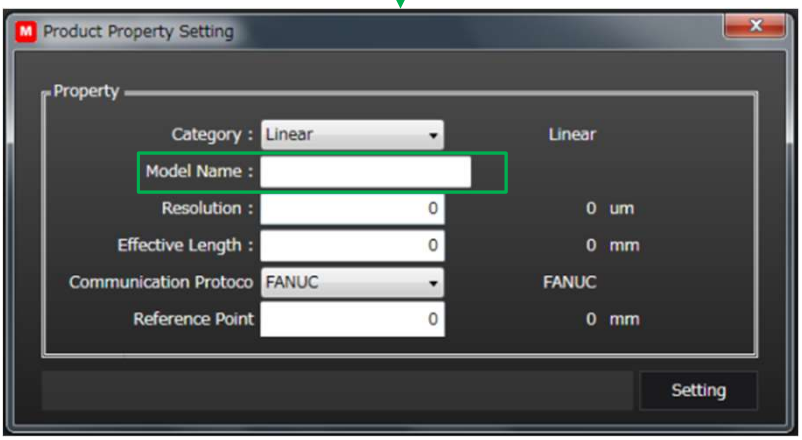

② Enter the model name written on the scale model name label with a hyphen.
Example) SQ57-037SAFX

③ After entering all scale type names, press the "tab key" on the keyboard.
The basic scale information is automatically displayed from the entered scale model name.

Press the "tab key"

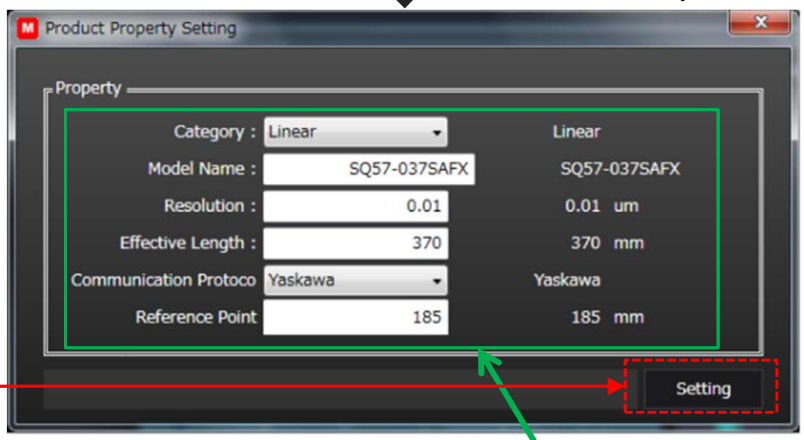

④ When the scale information is updated, click the "Setting key" on the screen

Recognize and display scale information

⑤ Change to the initial screen
Click [Measuring switch] ON on the screen to start measurement!

that's all

4. Installation using the positioning jig

The positioning jig explained here is a jig that correctly reproduces the position of the mounting bracket of the linear scale (SQ57). Explanations are given using the stop surfaces type bracket and head bracket.
If this jig is not suitable due to the mechanism and configuration of your machine, please use it as a reference material to create a jig suitable for your machine.

*For the dimensional diagrams of positioning jig, refer to page 22 in this manual.

4-1. Position of head bracket with respect to the positioning jig

Check the position of the head bracket and the screw tightening direction by referring to the mounting example below.

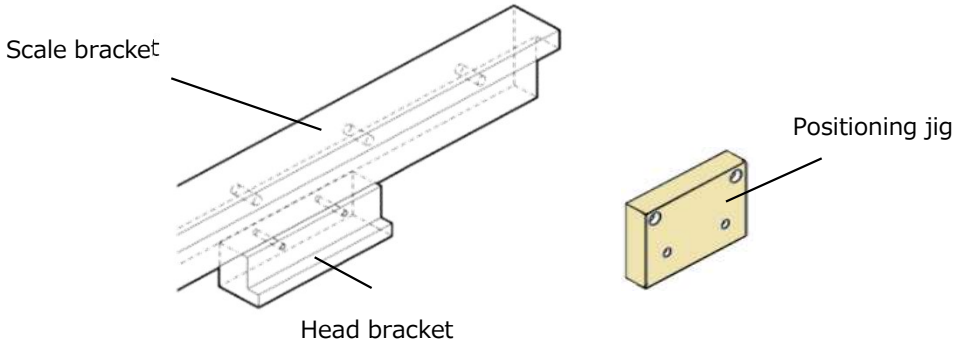

Mounting bracket (head fixed from the back)

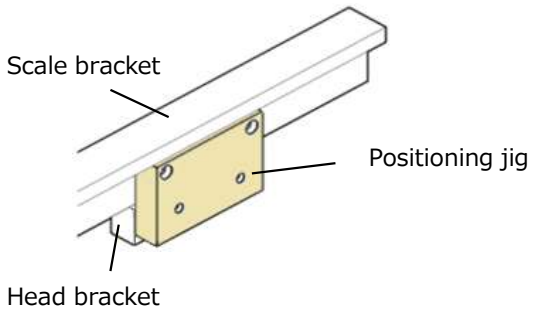

Mounting bracket (head fixed from the front)

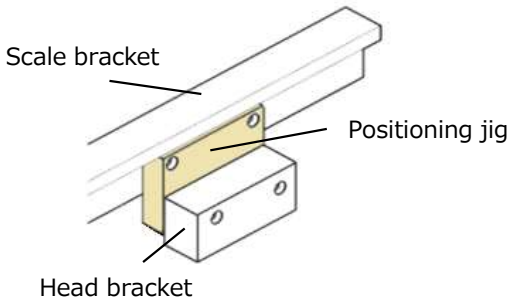

Screw tightening direction

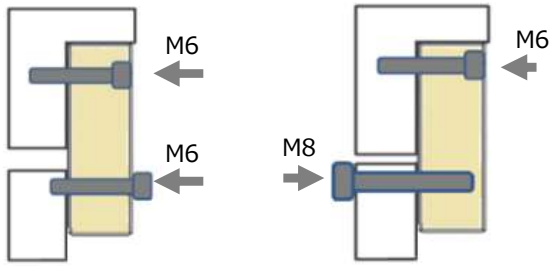

Screw tightening direction

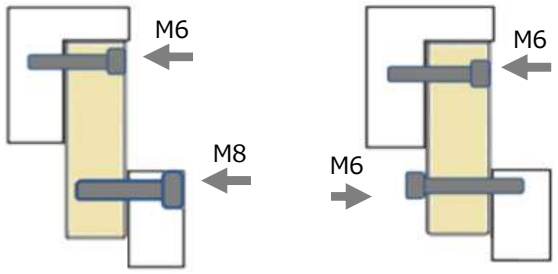

4-2. How to install

* This is an example of using the stop surface type bracket for the scale bracket.

Step ①: Fixing the scale bracket

After temporarily fixing the scale bracket to the machine side, check the parallelism with the machine guide and then fully tighten it.

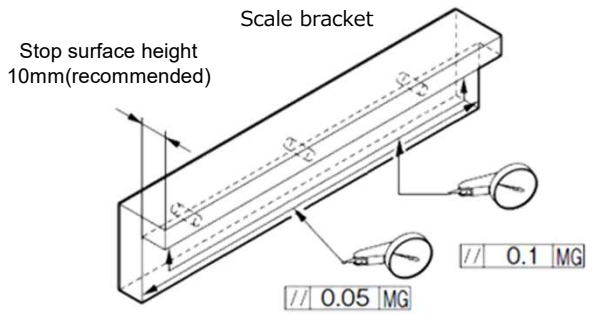

Step ②: Fix the positioning jig

Attach the positioning jig to the appropriate position on the scale bracket.

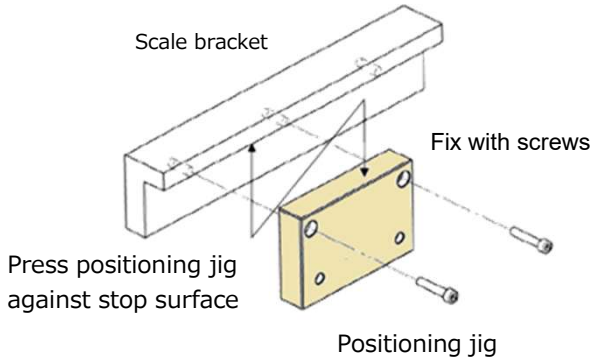

Step ③: Installation of head bracket

Temporarily fix the head bracket.

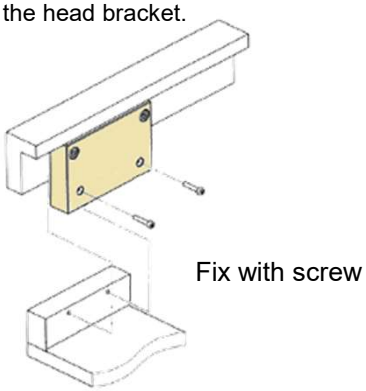

Step ④: Fix the head bracket

Fix the head bracket to the machine side.

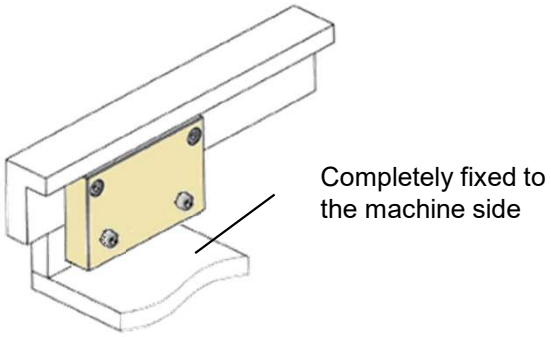

Step ⑤: Removal of positioning jig

Remove the screw fixing the head bracket, move the device, and Slide the head bracket and check the position of the head bracket. After checking, remove the positioning jig.

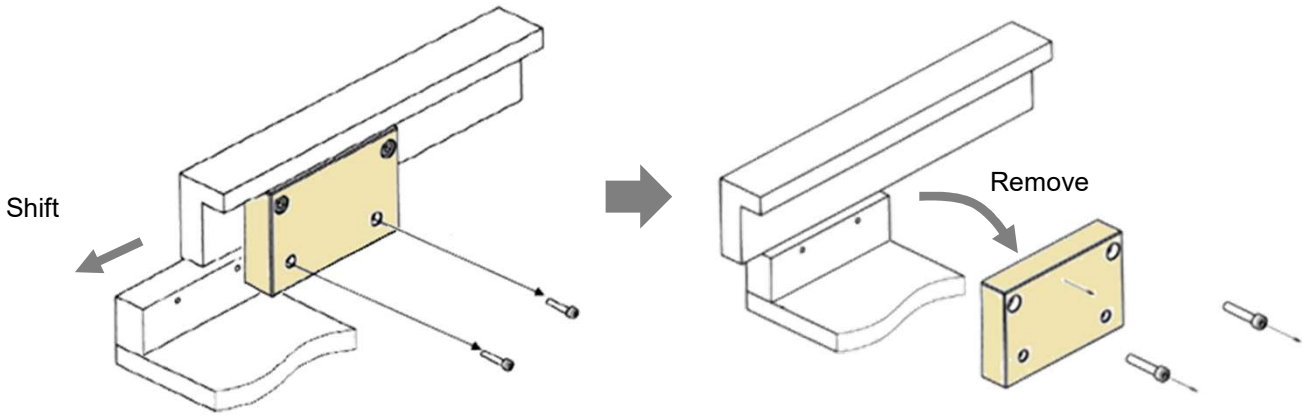

Check for interference and gap between positioning jig and head bracket

Step ⑥: Scale installation

Place the reference mounting surface on the scale side in close contact with the stop surface of the scale bracket, and fix with the mounting screws provided.

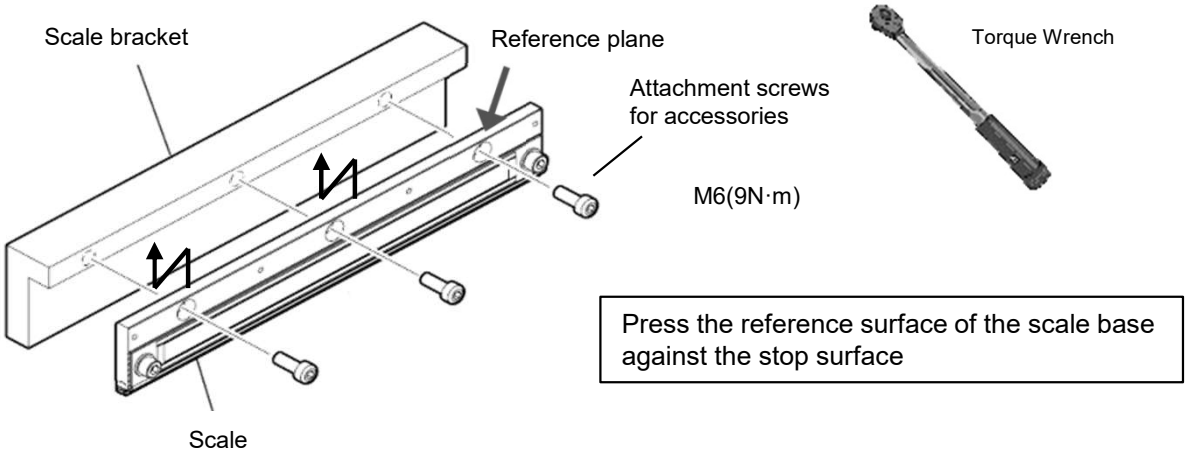

Note: In case of use of other non-supplied screws , the screw head may project from mounting surface. Do not use a screw with large “R” or no screw threads at base part as shown below.

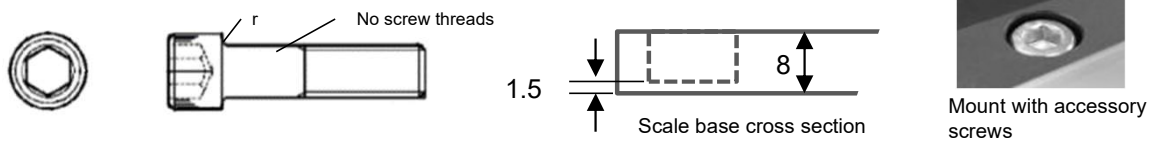

Step ⑦: Mount the sensor head

Temporarily fix the sensor head to the head bracket.

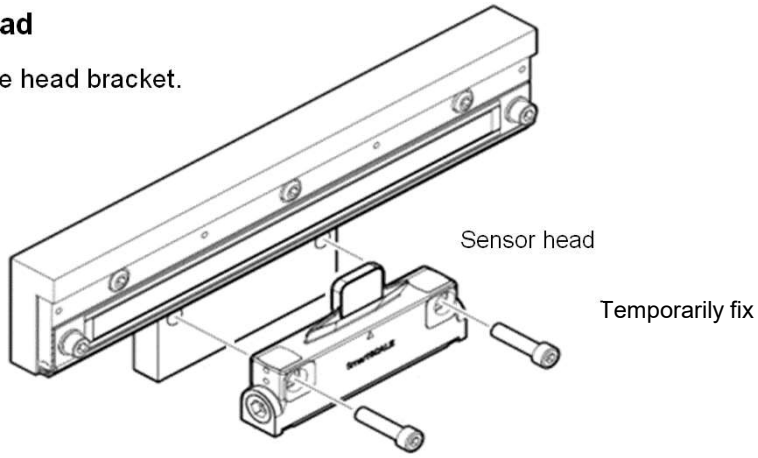

Step ⑧: Mount the sensor head (Clearance adjustment)

Step ⑨: Mount the sensor head (Track adjustment)

Step ⑩: Connect the cable

Step ⑪: Mount the scale cover

See 「**2. How to install the scale**」 of this manual (P10 ～ P13)

5. Installation tool (option)

SZ27

Track positioning spacer:

Positioning of the sensor head in the track direction relative to the scale can be easily performed.

t=1.0 mm (For center value confirmation)
t=0.8 mm (For lower limit confirmation)
t=1.2 mm (For upper limit confirmation)

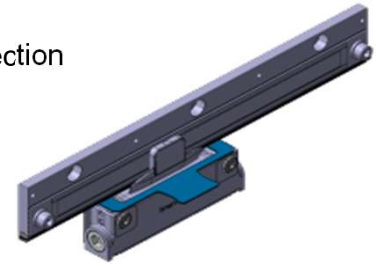

SZ27

SZ28

Track positioning spacer:

Positioning of the sensor head in the track direction relative to the scale can be easily performed.

t=1.0 mm (For center value confirmation)
t=0.8 mm (For lower limit confirmation)
t=1.2 mm (For upper limit confirmation)

SZ28

SZ29

Spacer for clearance adjustment:

When mounting the sensor head, height adjustment in the clearance direction can be easily adjusted.

(t=0.05/0.1/0.2㎜)

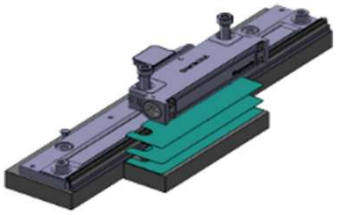

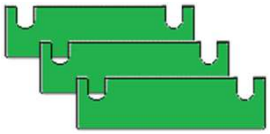

SZ29

SZ30 (AM-000-820-1)

CH22/23 dedicated socket:

Effective in places where a torque wrench cannot be used.
A torque control product can be made by combining with a torque driver.

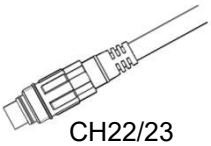

CH22/23

SZ30

Socket adapter
Size: 3/8 (9.5)

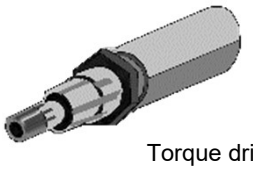

Torque driver
(reference)
Manufacturer: TOHNICHI
Signal type torque driver
RTD120CN
RTD260CN

AC20-B100

Signal checking tool:

You can check the scale signal and clearance after installing the scale. You can also check the signal when an error occurs. The AC20 software must be installed on your PC in advance. A dedicated cable for connecting to the scale must be prepared separately.

Adaptor cable
CE35-02 (for Mitsubishi control)
CE36-02 (for Fanuc control)
CE36-02T01(for Yasukawa control)
CE37-02 (for Siemens DQ control)

AC20-B100

How to use the clearance adjustment spacer(SZ29)

The sensor head is designed so that when it is installed at the same height as the scale mounting surface, the clearance between the sensor head detecting part and the scale surface is approximately **0.185 mm.** However, adjusting the head bracket to the ideal height is sometimes difficult.

Design with an offset of 0.2 mm on the head mounting surface in advance. The clearance can be adjusted easily by adjusting the gap with SZ29 (clearance adjustment spacer).

When mounted on the bottom of the sensor head

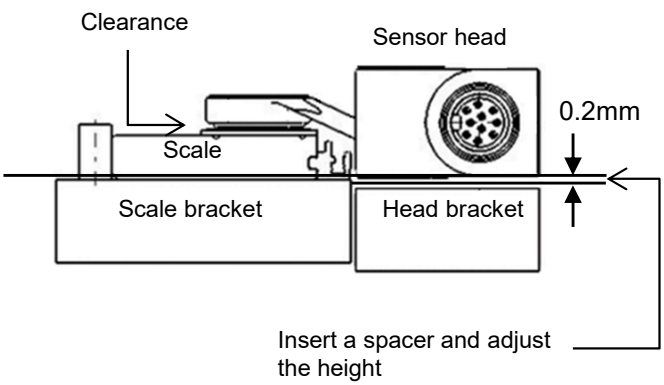

When mounted on the top of the sensor head

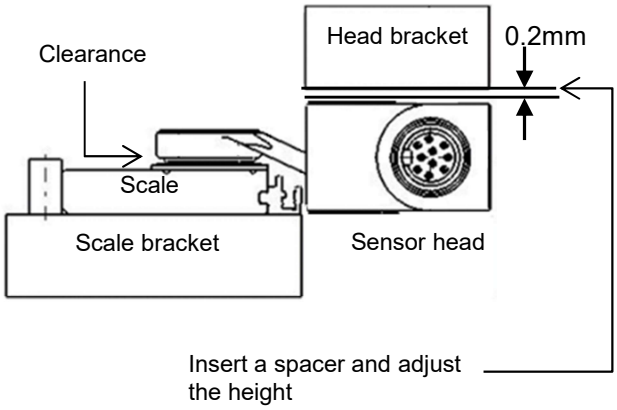

Spacer combination

	0.05mm	0.1mm	0.2mm	Total
+	○	○	○	0.35
		○	○	0.3
	○		○	0.25
Base			○	0.2
–	○	○		0.15
		○		0.1
	○			0.05

SZ29

Spacer for clearance adjustment
(t=0.05/0.1/0.2mm)

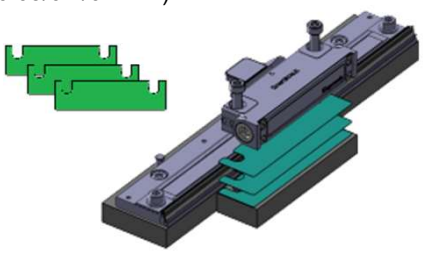

6. Dimensional diagrams of dedicated jig (Reference material)

Positioning jig(SQ57)

*This jig is a reference example.
Please refer to this outline drawing and scale outline drawing when creating a jig suitable for your equipment.

Material: Stainless

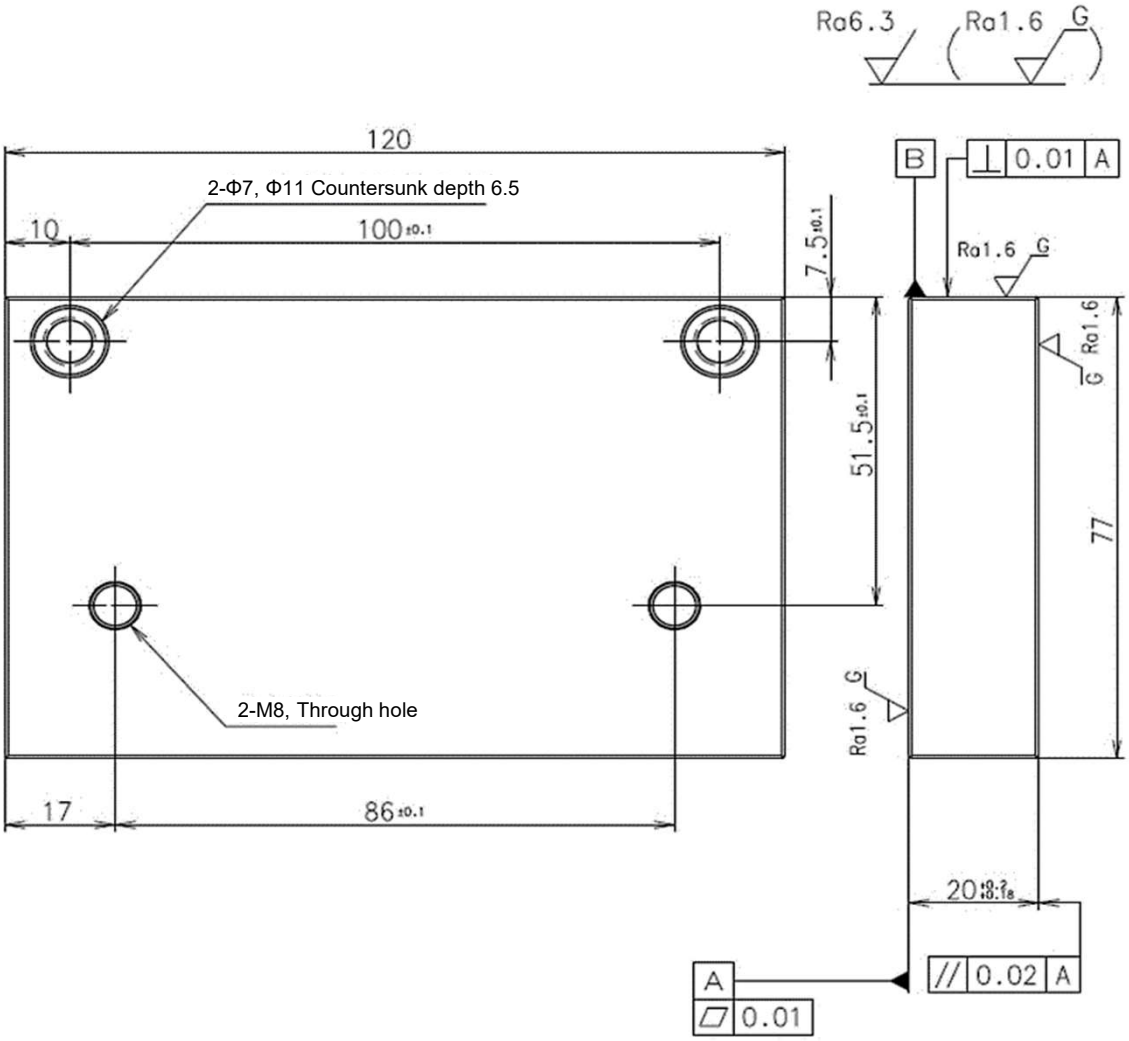

Note:

1) This part shall not use materials containing substances specified in RMS-0002: Product Environmental Technology Standard.

2) No burr on each side. The chamfer of the unspecified corner is C0.05 or less.

3) No protrusion due to scratches or dents.

SZ30 (CH22/23 dedicated socket) processing dimensions

*This jig is a product of TONE Corporation.
Please refer to this processing drawing when you process.

External dimensions (before processing)

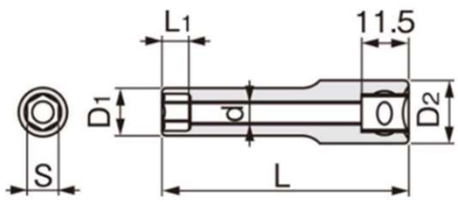

Manufacturer: TONE Co., Ltd.
Name: Super long socket
Model name: 3S-12L120

Product No.	Width across flats (mm) S	Dimension (mm) D1	Dimension (mm) D2	Dimension (mm) L1	Dimension (mm) L	Dimension (mm) d
3S-12L120	12	16.8	17.3	8.0	120.0	11.0

Processing dimension

Ra 6.3

Processing: Chrome plating

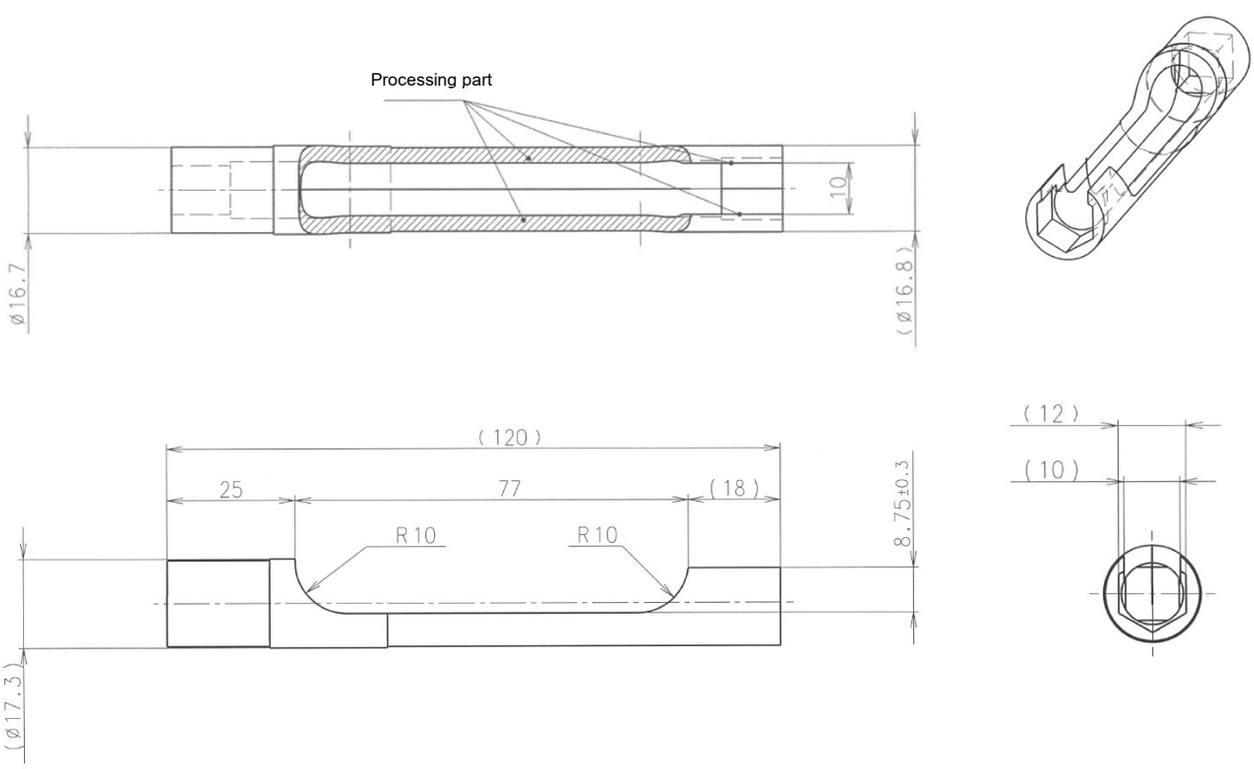

Note:

1) This part shall not use materials containing substances specified in RMS-0002: Product Environmental Technology Standard.

2) In the rear part after addition, the unindicated corner part shall be C0.05 or less.

3) Re-plat after additional machining.

Automation and Metrology International, LLC
1-888-354-2525
auto-met.com