HEIDENHAIN



Rotary Encoders

August 2010

Automation and Metrology International, LLC
8808 Tyler Blvd, Mentor, OH 44060
1-888-354-2525 | sales@auto-met.com
Request a quote: auto-met.com

Rotary encoders from HEIDENHAIN
serve as measuring sensors for rotary motion, angular velocity and, when used in conjunction with mechanical measuring standards such as lead screws, for linear motion. Application areas include electrical motors, machine tools, printing machines, woodworking machines, textile machines, robots and handling devices, as well as various types of measuring, testing, and inspection devices.
The high quality of the sinusoidal incremental signals permits high interpolation factors for digital speed control.



Rotary encoders for separate shaft coupling



Rotary encoders with mounted stator coupling

This catalog supersedes all previous editions, which thereby become invalid. The basis for ordering from HEIDENHAIN is always the catalog edition valid when the contract is made.

Standards (ISO, EN, etc.) apply only where explicitly stated in the catalog.

Contents

Overview and Specifications				
	Selection Guide			**4**
	Measuring Principles, Accuracy			**10**
	Mechanical Design Types and Mounting	Rotary Encoders with Stator Coupling		**12**
		Rotary encoders for Separate Shaft Coupling		**15**
		Shaft Couplings		**18**
	General Mechanical Information			**20**
Specifications		***Absolute Rotary Encoders***	***Incremental Rotary Encoders***	
	Mounted Stator Coupling	**ECN 100** Series	**ERN 100** Series	**22**
		ECN 400/EQN 400 Series	**ERN 400** Series	**24**
		ECN 400/EQN 400 Series with Universal Stator Coupling	**ERN 400** Series with Universal Stator Coupling	**28**
		ECN 1000/EQN 1000 Series	**ERN 1000** Series	**32**
	Separate Shaft Coupling	**ROC 400/ROQ 400** Series **RIC 400/RIQ 400** Series with Synchro Flange	**ROD 400** Series with Synchro Flange	**36**
		ROC 400/ROQ 400 Series **RIC 400/RIQ 400** Series with Clamping Flange	**ROD 400** Series with Clamping Flange	**40**
		ROC 1000/ROQ 1000 Series	**ROD 1000**	**44**
Electrical Connection				
	Interfaces and Pin Layouts	**Incremental Signals**	~ 1 V_{PP}	**48**
			⊓⊔ TTL	**50**
			⊓⊔ HTL	**52**
		Absolute Position Values	EnDat	**54**
			PROFIBUS DP	**61**
			SSI	**64**
	Connecting Elements and Cables			**66**
	HEIDENHAIN Measuring Equipment and Counter Cards			**68**
	General Electrical Information			**70**
Sales and Service				
	For More Information			**74**
	Addresses in Germany			**75**
	Addresses Worldwide			**76**

Selection Guide
Rotary Encoders for Standard Applications

Rotary Encoders	Absolute **Singleturn**				**Multiturn** 4096 revolutions	
Interface	EnDat		SSI	PROFIBUS DP	EnDat	
Power supply	3.6 to 14 V	5 V	5 V or 10 to 30 V	9 to 36 V	3.6 to 14 V	5 V
With Mounted Stator Coupling						
ECN/ERN 100 series 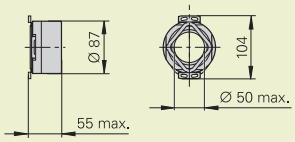	**ECN 125**[1] Positions/rev: 25 bits EnDat 2.2 / 22	**ECN 113** Positions/rev: 13 bits EnDat 2.2 / 01	**ECN 113**[5] Positions/rev: 13 bits	–	–	–
ECN/EQN/ERN 400 series 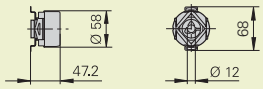	**ECN 425** Positions/rev: 25 bits EnDat 2.2 / 22 **Functional Safety**[4] **ECN 413** Positions/rev: 13 bits EnDat 2.2 / 01	–	**ECN 413** Positions/rev: 13 bits	**ECN 413**[4] Positions/rev: 13 bits	**EQN 437** Positions/rev: 25 bits EnDat 2.2 / 22 **Functional Safety**[4] **EQN 425** Positions/rev: 13 bits EnDat 2.2 / 01	–
ECN/EQN/ERN 400 series with universal stator coupling 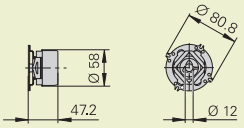	**ECN 425** Positions/rev: 25 bits EnDat 2.2 / 22 **ECN 413** Positions/rev: 13 bits EnDat 2.2 / 01	–	**ECN 413** Positions/rev: 13 bits	–	**EQN 437** Positions/rev: 25 bits EnDat 2.2 / 22 **EQN 425** Positions/rev: 13 bits EnDat 2.2 / 01	–
ECN/EQN/ERN 1000 series 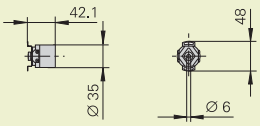	**ECN 1023** Positions/rev: 23 bits EnDat 2.2 / 22 **Functional Safety**[4] **ECN 1013** Positions/rev: 13 bits EnDat 2.2 / 01	–	–	–	**EQN 1035** Positions/rev: 23 bits EnDat 2.2 / 22 **Functional Safety**[4] **EQN 1025** Positions/rev: 13 bits EnDat 2.2 / 01	–
For Separate Shaft Coupling						
ROC/ROQ/ROD 400 **RIC/RIQ 400** series with synchro flange 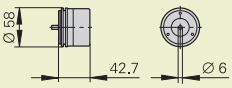	**ROC 425** Positions/rev: 25 bits EnDat 2.2 / 22 **Functional Safety**[4] **ROC 413** Positions/rev: 13 bits EnDat 2.2 / 01	**RIC 418** Positions/rev: 18 bits EnDat 2.1 / 01	**ROC 413** Positions/rev: 13 bits	**ROC 413** Positions/rev: 13 bits	**ROQ 437** Positions/rev: 25 bits EnDat 2.2 / 22 **Functional Safety**[4] **ROQ 425** Positions/rev: 13 bits EnDat 2.2 / 01	**RIQ 430** Positions/rev: 18 bits EnDat 2.1 / 01
ROC/ROQ/ROD 400 **RIC/RIQ 400** series with clamping flange 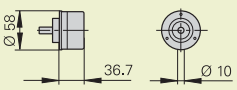	**ROC 425** Positions/rev: 25 bits EnDat 2.2 / 22 **Functional Safety**[4] **ROC 413** Positions/rev: 13 bits EnDat 2.2 / 01	**RIC 418** Positions/rev: 18 bits EnDat 2.1 / 01	**ROC 413** Positions/rev: 13 bits	**ROC 413** Positions/rev: 13 bits	**ROQ 437** Positions/rev: 25 bits EnDat 2.2 / 22 **Functional Safety**[4] **ROQ 425** Positions/rev: 13 bits EnDat 2.2 / 01	**RIQ 430** Positions/rev: 18 bits EnDat 2.1 / 01
ROC/ROQ/ROD 1000 series 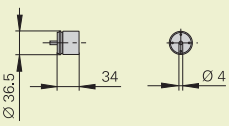	**ROC 1023** Positions/rev: 23 bits EnDat 2.2 / 22 **Functional Safety**[4] **ROC 1013** Positions/rev: 13 bits EnDat 2.2 / 01	–	–	–	**ROQ 1035** Positions/rev: 23 bits EnDat 2.2 / 22 **Functional Safety**[4] **ROQ 1025** Positions/rev: 13 bits EnDat 2.2 / 01	–

[1] Power supply: 3.6 to 5.25 V
[2] Up to 10000 signal periods through integrated 2-fold interpolation
[3] Up to 36000 signal periods through integrated 5/10-fold interpolation (higher interpolation upon request)

			Incremental				
	SSI 5 V or 10 to 30 V	PROFIBUS DP 9 to 36 V	⊓⊔ TTL 5 V	⊓⊔ TTL 10 to 30 V	⊓⊔ HTL 10 to 30 V	∿ 1 V_{PP} 5 V	
	–	–	**ERN 120** 1000 to 5000 lines	–	**ERN 130** 1000 to 5000 lines	**ERN 180** 1000 to 5000 lines	 **22**
	EQN 425 Positions/rev: 13 bits	**EQN 425**[4] Positions/rev: 13 bits	**ERN 420** 250 to 5000 lines	**ERN 460** 250 to 5000 lines	**ERN 430** 250 to 5000 lines	**ERN 480** 1000 to 5000 lines	 **24**
	EQN 425 Positions/rev: 13 bits	–	**ERN 420** 250 to 5000 lines	**ERN 460** 250 to 5000 lines	**ERN 430** 250 to 5000 lines	**ERN 480** 1000 to 5000 lines	 **28**
	–	–	**ERN 1020** 100 to 3600 lines **ERN 1070**[3] 1000/2500/ 3600 lines	–	**ERN 1030** 100 to 3600 lines	**ERN 1080** 100 to 3600 lines	 **32**
	ROQ 425 Positions/rev: 13 bits	**ROQ 425** Positions/rev: 13 bits 4096 revolutions	**ROD 426** 0 to 5000 lines[2]	**ROD 466** 0 to 5000 lines[2]	**ROD 436** 50 to 5000 lines	**ROD 486** 1000 to 5000 lines	 **36**
	ROQ 425 Positions/rev: 13 bits	**ROQ 425** Positions/rev: 13 bits 4096 revolutions	**ROD 420** 50 to 5000 lines	–	**ROD 430** 50 to 5000 lines	**ROD 480** 1000 to 5000 lines	 **40**
	–	–	**ROD 1020** 100 to 3600 lines **ROD 1070**[3] 1000/2500/ 3600 lines	–	**ROD 1030** 100 to 3600 lines	**ROD 1080** 100 to 3600 lines	 **44**

[4] Upon request
[5] 10 to 30 V via connecting cable with voltage converter

Selection Guide
Rotary Encoders for Integration in Motors

Rotary Encoders	Absolute **Singleturn**	**Multiturn** 4096 revolutions
With Integral Bearing and Mounted Stator Coupling		
Interface	EnDat	EnDat
Power supply	3.6 to 14 V	3.6 to 14 V
ECN/EQN/ERN 1100 series 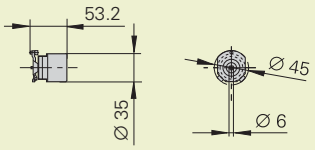	**ECN 1123** Positions/rev: 23 bits EnDat 2.2 / 22 **Functional safety** upon request **ECN 1113** Positions/rev: 13 bits EnDat 2.2 / 01	**EQN 1135** Positions/rev: 23 bits EnDat 2.2 / 22 **Functional safety** upon request **EQN 1125** Positions/rev: 13 bits EnDat 2.2 / 01
ECN/EQN/ERN 1300 series 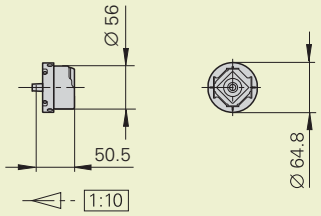	**ECN 1325** Positions/rev: 25 bits EnDat 2.2 / 22 **Functional safety** upon request **ECN 1313** Positions/rev: 13 bits EnDat 2.2 / 01	**EQN 1337** Positions/rev: 25 bits EnDat 2.2 / 22 **Functional safety** upon request **EQN 1325** Positions/rev: 13 bits EnDat 2.2 / 01
Without Integral Bearing		
Interface	EnDat	EnDat
Power supply	5 V	5 V
ECI/EQI 1100 series 	**ECI 1118** Positions/rev: 18 bits EnDat 2.1 / 21 **ECI 1118** Positions/rev: 18 bits EnDat 2.1 / 01	**EQI 1130** Positions/rev: 18 bits EnDat 2.1 / 21 **EQI 1130** Positions/rev: 18 bits EnDat 2.1 / 01
ECI/EQI 1300 series 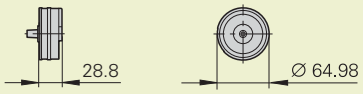	**ECI 1319** Positions/rev: 19 bits EnDat 2.1 / 01	**EQI 1331** Positions/rev: 19 bits EnDat 2.1 / 01
ERO 1200 Series 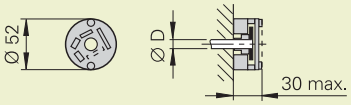	–	–
ERO 1400 Series 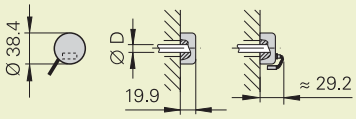	–	–

[1] 8192 signal periods through integrated 2-fold interpolation
[2] 37500 signal periods through integrated 5/10/20/25-fold interpolation

Incremental

These rotary encoders are described in the ***Position Encoders for Servo Drives*** catalog.

	⊓⊔ TTL 5 V	∿ 1 V_{PP} 5 V
	ERN 1120 1 024 to 3 600 lines	**ERN 1180** 1 024 to 3 600 lines **ERN 1185** 512/2 048 lines Z1 track for sine commutation
	ERN 1321 1 024 to 4 096 lines **ERN 1326** 1 024 to 4 096 lines [1] 3 TTL signals for block commutation	**ERN 1381** 512 to 4 096 lines **ERN 1387** 2 048 lines Z1 track for sine commutation





	⊓⊔ TTL 5 V	∿ 1 V_{PP} 5 V
	–	–
	–	–
	ERO 1225 1 024/2 048 lines	**ERO 1285** 1 024/2 048 lines
	ERO 1420 512 to 1 024 lines **ERO 1470** 1 000/1 500 [2]	**ERO 1480** 512 to 1 024 lines









Selection Guide
Rotary Encoders for Special Applications

Rotary Encoders	Absolute **Singleturn**			**Multiturn** 4096 revolutions	
For Drive Control in Elevators					
Interface	EnDat		SSI	EnDat	SSI
Power supply	3.6 to 14 V	5 V	5 V or 10 to 30 V		
ECN/ERN 100 series Protection IP 64 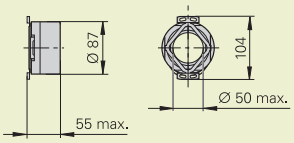	**ECN 125**[1] Positions/rev: 25 bits EnDat 2.2 / 22	**ECN 113** Positions/rev: 13 bits EnDat 2.2 / 01	**ECN 113**[5] Positions/rev: 13 bits	–	–
ECN/EQN/ERN 400 series Protection IP 64 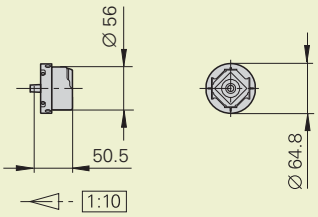	**ECN 425** Positions/rev: 25 bits EnDat 2.2 / 22 **Functional safety** upon request **ECN 413** Positions/rev: 13 bits EnDat 2.2 / 01	–	–	–	–
ECN/ERN 1300 series Protection IP 40 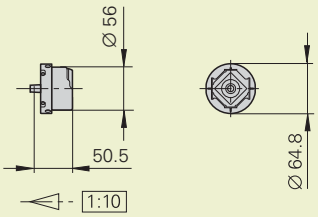	**ECN 1325** Positions/rev: 25 bits EnDat 2.2 / 22 **Functional safety** upon request **ECN 1313** Positions/rev: 13 bits EnDat 2.2 / 01	–	–	–	–
For Potentially Explosive Atmospheres[4] in zones 1, 2, 21 and 22					
Interface	EnDat		SSI	EnDat	SSI
Power supply	5 V		5 V	5 V	5 V
ROC/ROQ/ROD 400 series with synchro flange 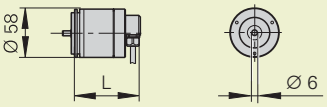	**ROC 413** Positions/rev: 13 bits EnDat 2.1 / 01		**ROC 413** Positions/rev: 13 bits	**ROQ 425** Positions/rev: 13 bits EnDat 2.1 / 01	**ROQ 425** Positions/rev: 13 bits
ROC/ROQ/ROD 400 series with clamping flange 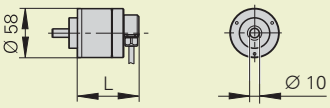	**ROC 413** Positions/rev: 13 bits EnDat 2.1 / 01		**ROC 413** Positions/rev: 13 bits	**ROQ 425** Positions/rev: 13 bits EnDat 2.1 / 01	**ROQ 425** Positions/rev: 13 bits

[1] Power supply: 3.6 to 5.25 V
[2] Up to 10000 signal periods through integrated 2-fold interpolation
[3] 8192 signal periods through integrated 2-fold interpolation
[4] Versions with blind hollow shaft available upon request
[5] 10 to 30 V via connecting cable with voltage converter

Incremental

	⊓⊔ TTL 5 V	⊓⊔ TTL 10 to 30 V	⊓⊔ HTL 10 to 30 V	∿ 1 V_{PP} 5 V
	ERN 120 1 000 to 5 000 lines	–	**ERN 130** 1 000 to 5 000 lines	**ERN 180** 1 000 to 5 000 lines
	ERN 421 1 024 to 5 000 lines[2)]	–	–	**ERN 487** 2 048 lines Z1 track for sine commutation
	ERN 1321 1 024 to 5 000 lines **ERN 1326** 1 024 to 4 096 lines[3)] 3 TTL signals for block commutation	–	–	**ERN 1381** 512 to 4 096 lines **ERN 1387** 2 048 lines Z1 track for sine commutation



22



See product overview:
Rotary Encoders for the Elevator Industry



See catalog:
Encoders for Servo Drives

	⊓⊔ TTL 5 V	⊓⊔ TTL 10 to 30 V	⊓⊔ HTL 10 to 30 V	∿ 1 V_{PP} 5 V
	ROD 426 1 000 to 5 000 lines	**ROD 466** 1 000 to 5 000 lines	**ROD 436** 1 000 to 5 000 lines	**ROD 486** 1 000 to 5 000 lines
	ROD 420 1 000 to 5 000 lines	–	**ROD 430** 1 000 to 5 000 lines	**ROD 480** 1 000 to 5 000 lines

See product overview:
Rotary Encoders for Potentially Explosive Atmospheres





Measuring Principles
Measuring Standard

HEIDENHAIN encoders with **optical scanning** incorporate measuring standards of periodic structures known as graduations. These graduations are applied to a carrier substrate of glass or steel.

These precision graduations are manufactured in various photolithographic processes. Graduations are fabricated from:

- extremely hard chromium lines on glass,
- matte-etched lines on gold-plated steel tape, or
- three-dimensional structures on glass or steel substrates.

The photolithographic manufacturing processes developed by HEIDENHAIN produce grating periods of typically 50 µm to 4 µm.

These processes permit very fine grating periods and are characterized by a high definition and homogeneity of the line edges. Together with the photoelectric scanning method, this high edge definition is a precondition for the high quality of the output signals.

The master graduations are manufactured by HEIDENHAIN on custom-built high-precision ruling machines.

Encoders using the **inductive scanning principle** have graduation structures of copper/nickel. The graduation is applied to a carrier material for printed circuits.

Measurement Methods

With the **absolute measuring method,** the position value is available from the encoder immediately upon switch-on and can be called at any time by the subsequent electronics. There is no need to move the axes to find the reference position. The absolute position information is read from the **grating on the graduated disk,** which is designed as a serial code structure or—as on the ECN 100—consists of several parallel graduation tracks.

A separate incremental track (on the ECN 100 the track with the finest grating period) is interpolated for the position value and at the same time is used to generate an optional incremental signal.

In **singleturn encoders** the absolute position information repeats itself with every revolution. **Multiturn encoders** can also distinguish between revolutions.

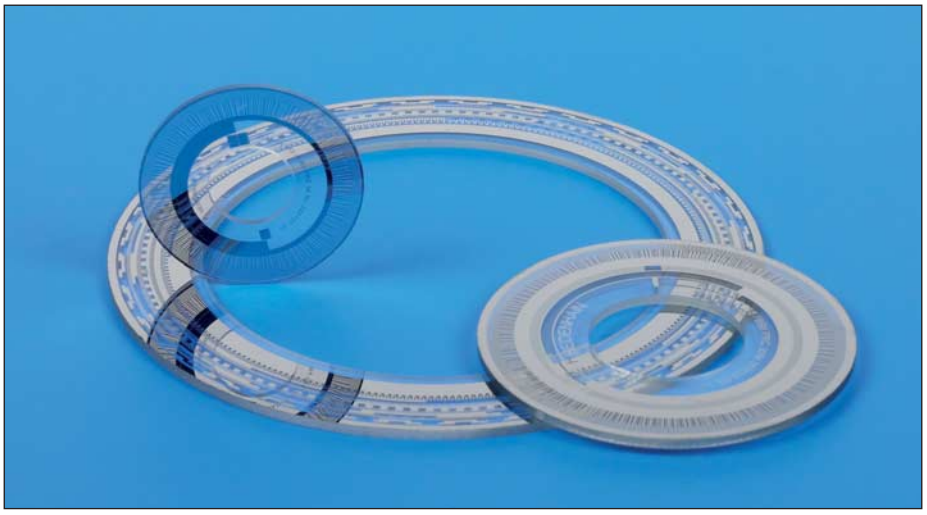

Circular graduations of absolute rotary encoders

With the **incremental measuring method,** the graduation consists of a periodic grating structure. The position information is obtained **by counting** the individual increments (measuring steps) from some point of origin. Since an absolute reference is required to ascertain positions, the graduated disks are provided with an additional track that bears a **reference mark.**

The absolute position established by the reference mark is gated with exactly one measuring step.

The reference mark must therefore be scanned to establish an absolute reference or to find the last selected datum.



Circular graduations of incremental rotary encoders

Scanning Methods

Photoelectric scanning
Most HEIDENHAIN encoders operate using the principle of photoelectric scanning. Photoelectric scanning of a measuring standard is contact-free, and as such free of wear. This method detects even very fine lines, no more than a few microns wide, and generates output signals with very small signal periods.

The ECN, EQN, ERN and ROC, ROQ, ROD rotary encoders use the imaging scanning principle.

Put simply, the imaging scanning principle functions by means of projected-light signal generation: two graduations with equal grating periods are moved relative to each other—the scale and the scanning reticle. The scale carrier material is steel. The graduation on the measuring standard can likewise be applied to a transparent surface, but also a reflective surface. When parallel light passes through a grating, light and dark surfaces are projected at a certain distance. An index grating with the same grating period is located here. When the two gratings move relative to each other, the incident light is modulated. If the gaps in the gratings are aligned, light passes through. If the lines of one grating coincide with the gaps of the other, no light passes through. Photovoltaic cells convert these variations in light intensity into nearly sinusoidal electrical signals. Practical mounting tolerances for encoders with the imaging scanning principle are achieved with grating periods of 10 µm and larger.

The ROC/ROQ 400/1000 and ECN/EQN 400/1000 absolute rotary encoders with optimized scanning have a single large photosensor instead of a group of individual photoelements. Its structures have the same width as that of the measuring standard. This makes it possible to do without the scanning reticle with matching structure.

Other scanning principles
ECI/EQI and RIC/RIQ rotary encoders operate according to the inductive measuring principle. Here, graduation structures modulate a high-frequency signal in its amplitude and phase. The position value is always formed by sampling the signals of all receiver coils distributed evenly around the circumference.

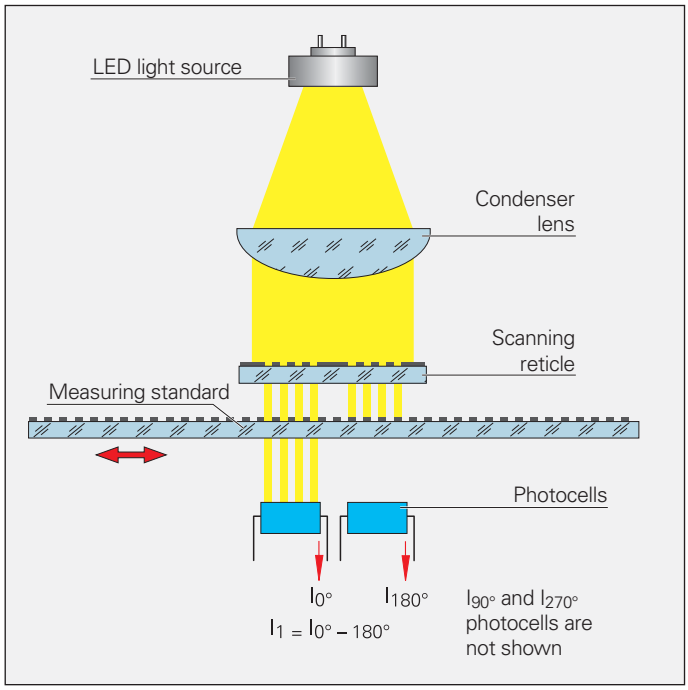

Photoelectric scanning according to the imaging scanning principle

Accuracy

The accuracy of position measurement with rotary encoders is mainly determined by
- the directional deviation of the radial grating,
- the eccentricity of the graduated disk to the bearing,
- the radial deviation of the bearing,
- the error resulting from the connection with a shaft coupling (on rotary encoders with stator coupling this error lies within the system accuracy),
- the interpolation error during signal processing in the integrated or external interpolation and digitizing electronics.

For **incremental rotary encoders** with line counts up to 5000:
The maximum directional deviation at 20 °C ambient temperature and slow speed (scanning frequency between 1 kHz and 2 kHz) lies within

$$\pm \frac{18° \text{ mech.} \cdot 3600}{\text{Line count } z} \text{ [angular seconds]}$$

which equals

$$\pm \frac{1}{20} \text{ grating period.}$$

The ROD rotary encoders generate 6000 to 10000 signal periods per revolution through signal doubling. The line count is important for the system accuracy.

The accuracy of absolute position values from **absolute rotary encoders** is given in the specifications for each model.

For absolute rotary encoders with **complementary incremental signals,** the accuracy depends on the line count:

Line count	Accuracy
16	± 480 angular seconds
32	± 280 angular seconds
512	± 60 angular seconds
2048	± 20 angular seconds

The above accuracy data refer to incremental measuring signals at an ambient temperature of 20 °C and at slow speed.

Mechanical Design Types and Mounting
Rotary Encoders with Stator Coupling

ECN/EQN/ERN rotary encoders have integrated bearings and a mounted stator coupling. They compensate radial runout and alignment errors without significantly reducing the accuracy. The encoder shaft is directly connected with the shaft to be measured. During angular acceleration of the shaft, the stator coupling must absorb only that torque caused by friction in the bearing. The stator coupling permits axial motion of the measured shaft:

ECN/EQN/ERN 400	± 1 mm
ECN/EQN/ERN 1000:	± 0.5 mm
ECN/ERN 100:	± 1.5 mm

Mounting
The rotary encoder is slid by its hollow shaft onto the measured shaft, and the rotor is fastened by two screws or three eccentric clamps. For rotary encoders with hollow through shaft, the rotor can also be fastened at the end opposite to the flange. Rotary encoders of the ECN/EQN/ERN 1300 series with taper shaft are particularly well suited for repeated mounting (see the brochure *Position Encoders for Servo Drives)*. The stator is connected without a centering collar on a flat surface. The **universal stator coupling** of the ECN/EQN/ERN 400 permits versatile mounting, e.g. by its thread provided for fastening it from outside to the motor cover.

Dynamic applications require the highest possible natural frequencies f_N of the system (also see *General Mechanical Information).* This is attained by connecting the shafts on the flange side and fastening the coupling by four cap screws or, on the ECN/EQN/ERN 1000, with special washers.

Natural frequency f_E with coupling fastened by 4 screws

	Stator coupling	Cable	Flange socket	
			Axial	Radial
ECN/EQN/ ERN 400	Standard Universal	1 550 Hz 1 400 Hz[1)]	1 500 Hz 1 400 Hz	1 000 Hz 900 Hz
ECN/ERN 100		1 000 Hz	–	400 Hz
ECN/EQN/ERN 1000		1 800 Hz[2)]	–	–

[1)] Also when fastening with 2 screws
[2)] Also when fastening with 2 screws and washers

ECN/ERN 100

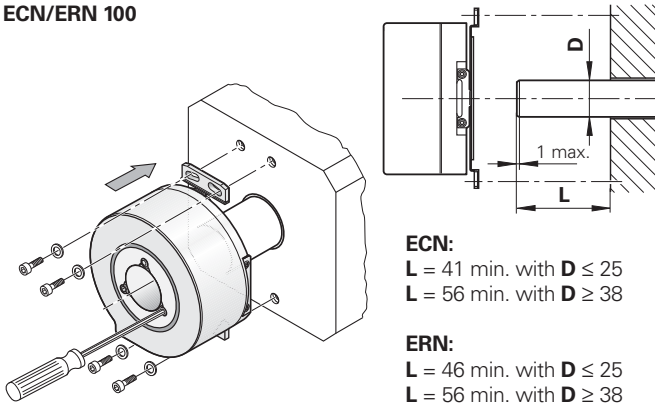

ECN:
L = 41 min. with **D** ≤ 25
L = 56 min. with **D** ≥ 38

ERN:
L = 46 min. with **D** ≤ 25
L = 56 min. with **D** ≥ 38

ECN/EQN/ERN 400 e.g. with standard stator coupling

Blind hollow shaft

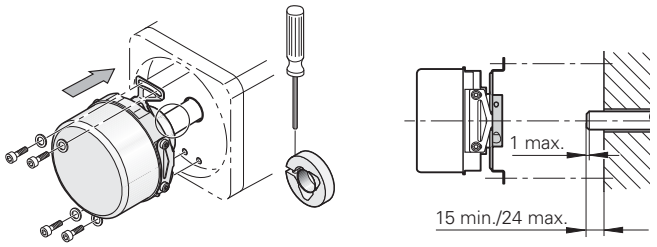

Hollow through shaft

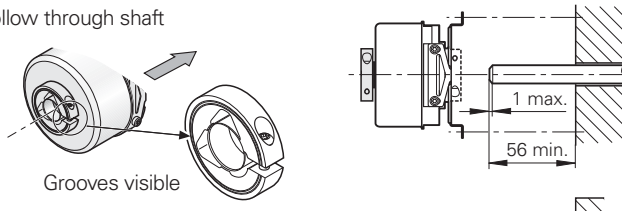

ECN/EQN/ERN 400
e.g. with universal stator coupling

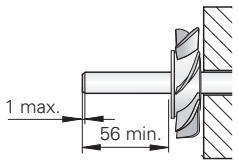

Hollow through shaft

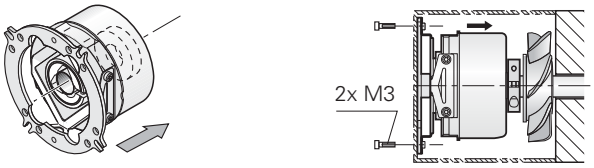

ECN/EQN/ERN 1000

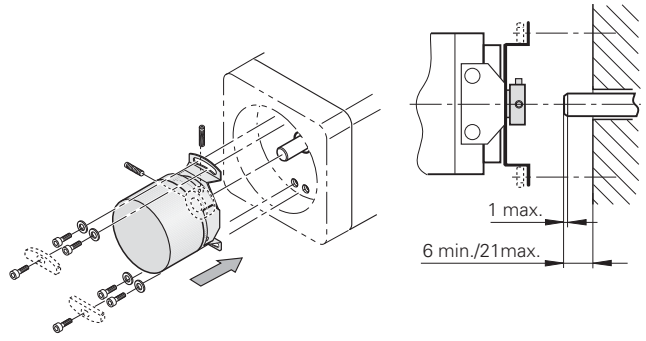

Mounting accessories

Washer
for ECN/EQN/ERN 1000
For increasing the natural frequency f_E and mounting with only two screws.
ID 334653-01

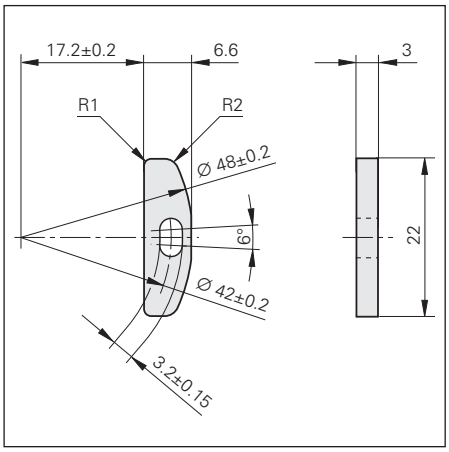

Shaft clamp ring
for ECN/EQN/ERN 400
By using a second shaft clamp ring, the mechanically permissible speed of rotary encoders with hollow through shaft can be increased to a maximum of 12000 min^{-1}.
ID 540741-xx



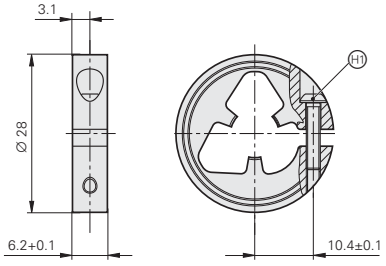

H1 = Clamping screw with X8 hexalobular socket,
tightening torque 1.1 ± 0.1 Nm

If the encoder shaft is subject to high loads, for example from friction wheels, pulleys, or sprockets, HEIDENHAIN recommends mounting the ECN/EQN/ERN 400 with a bearing assembly.

	Bearing assembly
Permissible speed n	≤ 6000 min^{-1}
Shaft load	Axial: 150 N; Radial: 350 N
Operating temperature	–40 °C to 100 °C

Bearing assembly
for ERN/ECN/EQN 400
with blind hollow shaft
ID 574185-03

The bearing assembly is capable of absorbing large radial shaft loads. It prevents overload of the encoder bearing. On the encoder side, the bearing assembly has a stub shaft with 12 mm diameter and is well suited for the ERN/ECN/EQN 400 encoders with blind hollow shaft. Also, the threaded holes for fastening the stator coupling are already provided. The flange of the bearing assembly has the same dimensions as the clamping flange of the ROD 420/430 series. The bearing assembly can be fastened through the threaded holes on its face or with the aid of the mounting flange or the mounting bracket (see page 15).

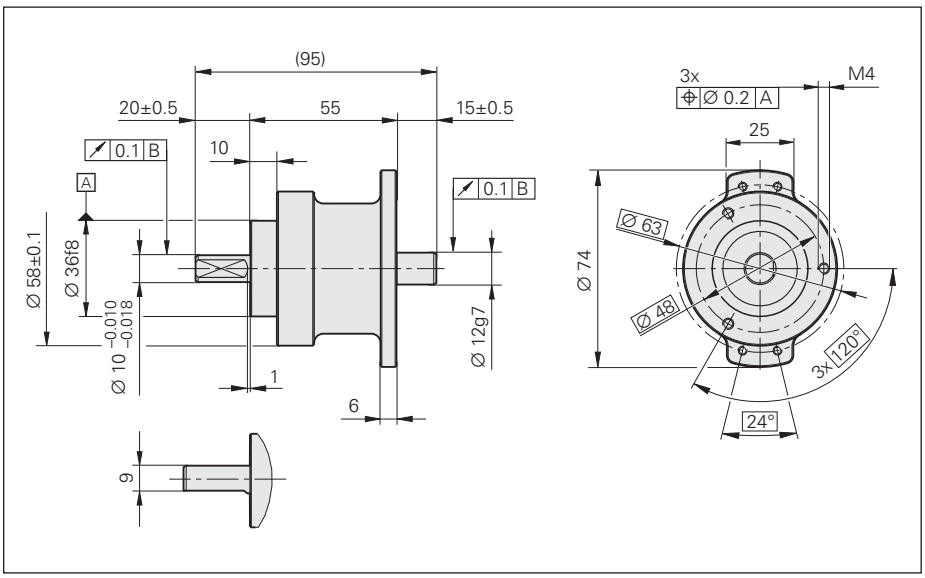

Torque supports for the ERN/ECN/EQN 400
For simple applications with the ERN/ECN/EQN 400, the stator coupling can be replaced by torque supports. The following kits are available:

Wire torque support
The stator coupling is replaced by a flat metal ring to which the provided wire is fastened.
ID 510955-01

Pin torque support
Instead of a stator coupling, a "synchro flange" is fastened to the encoder. A pin serving as torque support is mounted either axially or radially on the flange. As an alternative, the pin can be pressed in on the customer's surface, and a guide can be inserted in the encoder flange for the pin.
ID 510861-01



General accessories

Screwdriver bit
For HEIDENHAIN shaft couplings
For ExN 100/400/1000 shaft couplings
For ERO shaft couplings

Width across flats	Length	ID
1.5	70 mm	350378-01
1.5 (ball head)		350378-02
2		350378-03
2 (ball head)		350378-04
2.5		350378-05
3 (ball head)		350378-08
4		350378-07
4 (with dog point)[1)]		350378-14
TX8	89 mm 152 mm	350378-11 350378-12

[1)] For screws as per DIN 6912 (low head screw with pilot recess)

Screwdriver
Adjustable torque
0.2 Nm to 1.2 Nm ID 350379-04
1 Nm to 5 Nm ID 350379-05



Rotary Encoders for Separate Shaft Coupling

ROC/ROQ/ROD and **RIC/RIQ** rotary encoders have integrated bearings and a solid shaft. The encoder shaft is connected with the measured shaft through a separate rotor coupling. The coupling compensates axial motion and misalignment (radial and angular offset) between the encoder shaft and measured shaft. This relieves the encoder bearing of additional external loads that would otherwise shorten its service life. Diaphragm and metal bellows couplings designed to connect the rotor of the ROC/ROQ/ROD/RIC/RIQ encoders are available (see *Shaft Couplings*).



ROC/ROQ/ROD 400 and RIC/RIQ 400 series rotary encoders permit high bearing loads (see diagram). They can therefore also be mounted directly onto mechanical transfer elements such as gears or friction wheels.
If the encoder shaft is subject to relatively high loads, for example from friction wheels, pulleys, or sprockets, HEIDENHAIN recommends mounting the ECN/EQN/ERN 400 with a bearing assembly.



Bearing service life in the ROC/ROQ/ROD 400 and RIC/RIQ 400
The lifetime of the shaft bearing depends on the shaft load, the shaft speed, and the point of force application. The values given in the specifications for the shaft load are valid for all permissible speeds, and do not limit the bearing lifetime. The diagram shows an example of the different bearing lifetimes to be expected at further loads. The different points of force application of shafts with 6 mm and 10 mm diameters have an effect on the bearing lifetime.

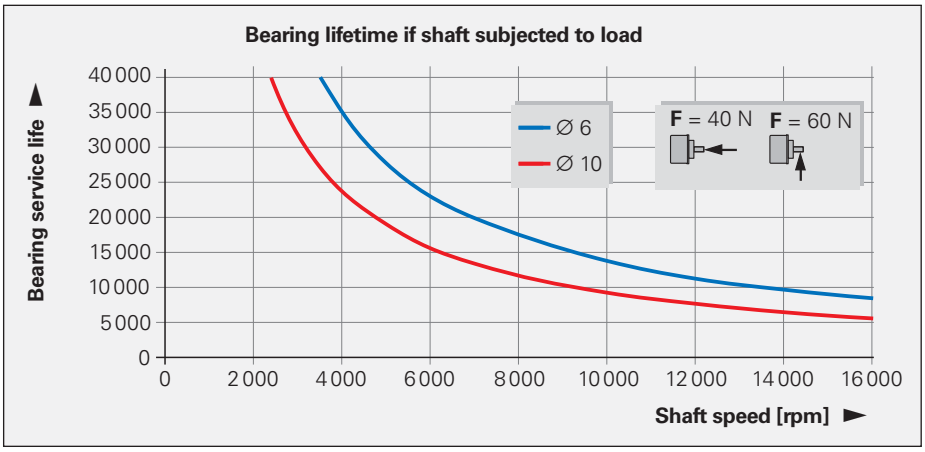

Rotary encoders with synchro flange

Mounting

- by the synchro flange with three fixing clamps or
- by fastening threads holes on the encoder flange to an adapter flange (for ROC/ROQ/ROD 400 or RIC/RIQ 400).

Rotary encoders with synchro flange

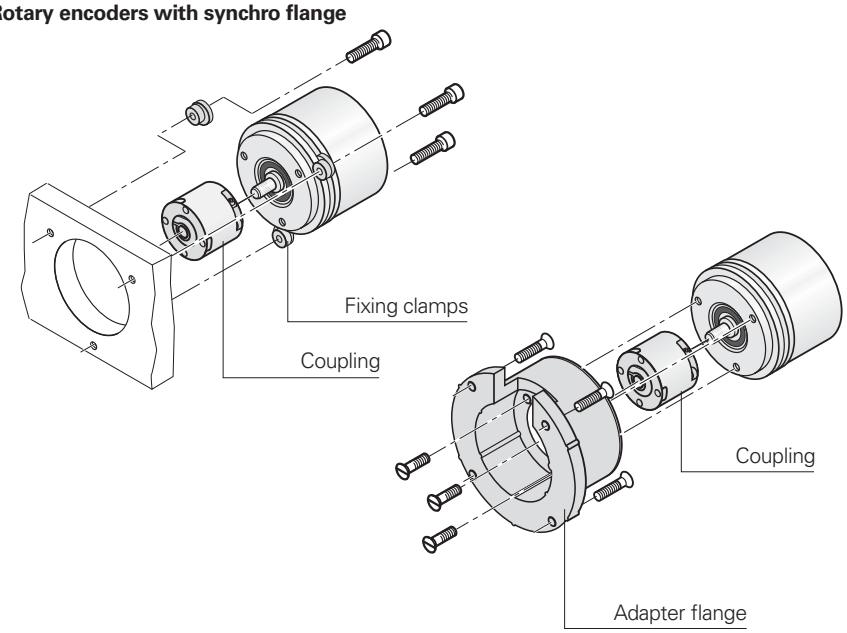

Mounting accessories

Adapter flange
(electrically nonconducting)
ID 257044-01



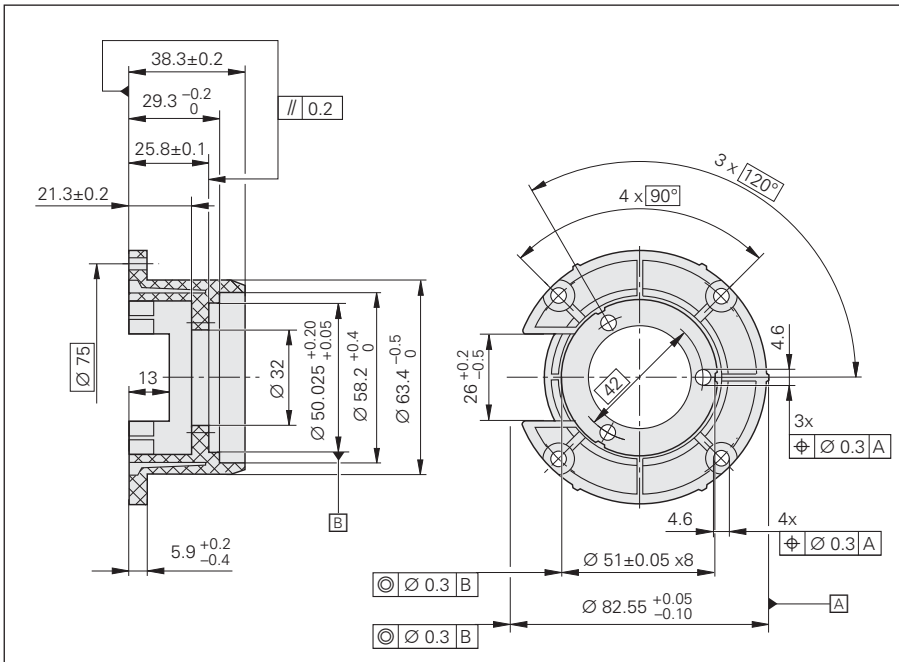

Fixing clamps
For ROC/ROQ/ROD 400 and RIC/RIQ 400 series
(3 per encoder)
ID 200032-01

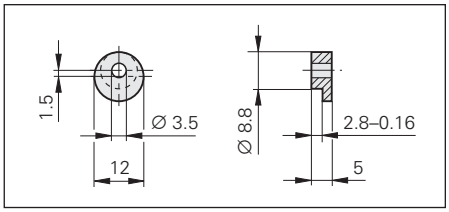

Fixing clamps
For ROC/ROQ/ROD 1000 series
(3 per encoder)
ID 200032-02

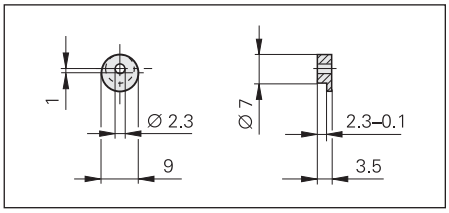



Rotary encoders with clamping flange

Mounting
- by fastening the threaded holes on the encoder flange to an adapter flange or
- by clamping at the clamping flange.

The centering collar on the synchro flange or clamping flange serves to center the encoder.

ROC/ROQ/ROD 400 with clamping flange

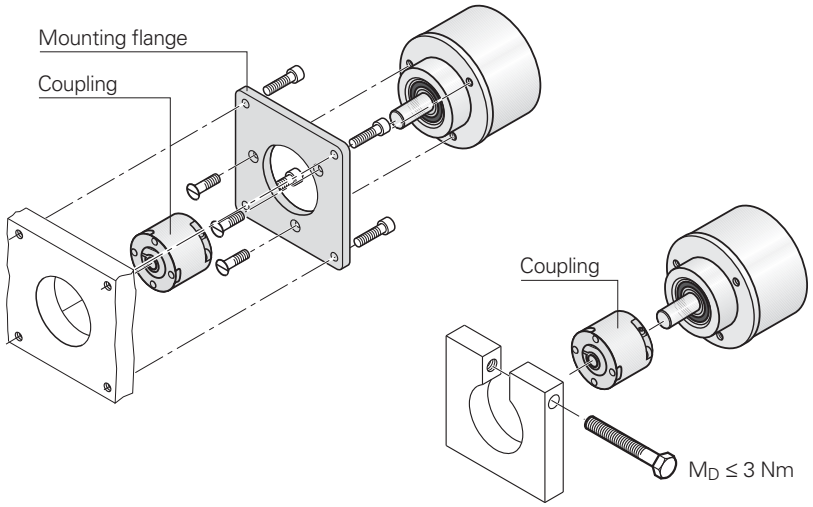

Mounting accessories

Mounting flange
ID 201 437-01



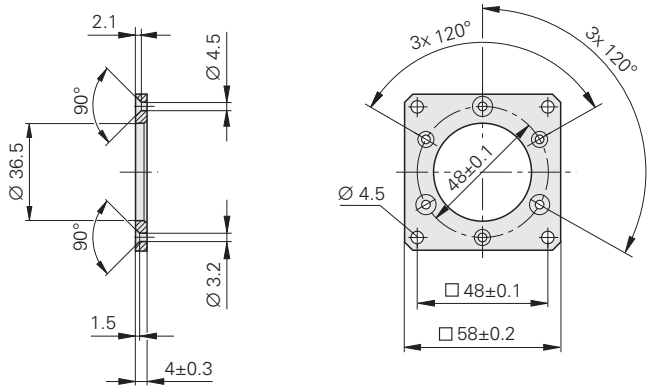

Mounting bracket
ID 581 296-01



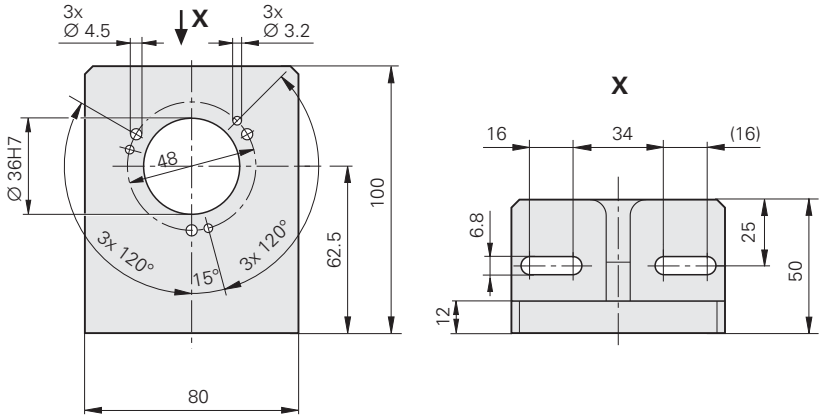

Shaft Couplings

	ROC/ROQ/ROD 400				ROD 1000
	Diaphragm coupling				Metal bellows coupling
		with galvanic isolation			
	K 14	K 17/01 K 17/06	K 17/02 K 17/04 K 17/05	K 17/03	18EBN3
Hub bore	6/6 mm	6/6 mm 6/5 mm	6/10 mm 10/10 mm 6/9.52 mm	10/10 mm	4/4 mm
Kinematic transfer error*	± 6″	± 10″			± 40″
Torsional rigidity	500 $\frac{Nm}{rad}$	150 $\frac{Nm}{rad}$	200 $\frac{Nm}{rad}$	300 $\frac{Nm}{rad}$	60 $\frac{Nm}{rad}$
Max. torque	0.2 Nm	0.1 Nm		0.2 Nm	0.1 Nm
Max. radial offset λ	≤ 0.2 mm	≤ 0.5 mm			≤ 0.2 mm
Max. angular error α	≤ 0.5°	≤ 1°			≤ 0.5°
Max. axial motion δ	≤ 0.3 mm	≤ 0.5 mm			≤ 0.3 mm
Moment of inertia (approx.)	$6 \cdot 10^{-6}$ kgm^2	$3 \cdot 10^{-6}$ kgm^2		$4 \cdot 10^{-6}$ kgm^2	$0.3 \cdot 10^{-6}$ kgm^2
Permissible speed	16000 min^{-1}	16000 min^{-1}			12000 min^{-1}
Torque for locking screws (approx.)	1.2 Nm				0.8 Nm
Weight	35 g	24 g	23 g	27.5 g	9 g

*With radial offset λ = 0.1 mm, angular error α = 0.15 mm over 100 mm ≙ 0.09° valid up to 50 °C

Radial offset

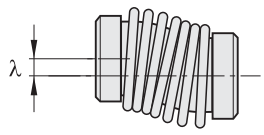

Angular error

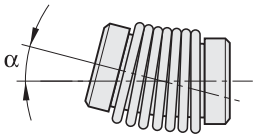

Axial motion

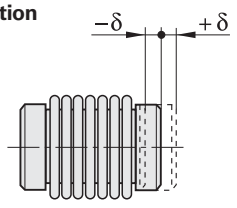

Mounting accessories

Screwdriver bits
Screwdriver
See page 14

Metal bellows coupling 18 EBN 3
For ROC/ROQ/ROD 1000 series
With **4 mm shaft diameter**
ID 200393-02



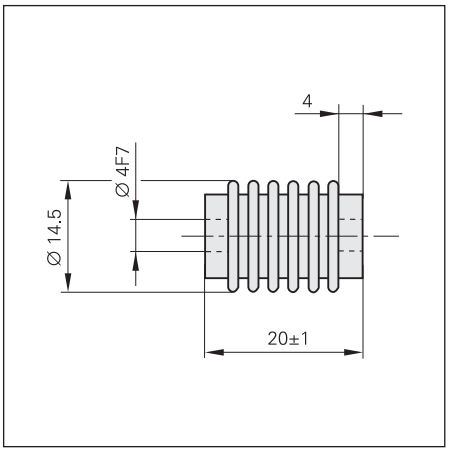

Diaphragm coupling K 14
For ROC/ROQ/ROD 400 and RIC/RIQ 400 series
With **6 mm shaft diameter**
ID 293328-01



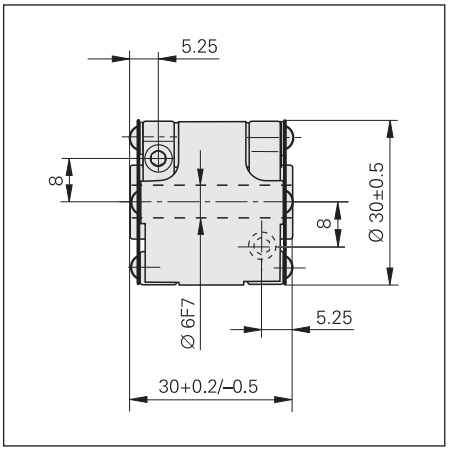

Recommended fit for the mating shaft: h6

Diaphragm coupling K 17 with galvanic isolation
For ROC/ROQ/ROD 400 and RIC/RIQ 400 series
With **6 or 10 mm shaft diameter**
ID 296746-xx



Suitable also for potentially explosive atmospheres in zones 1, 2, 21 and 22

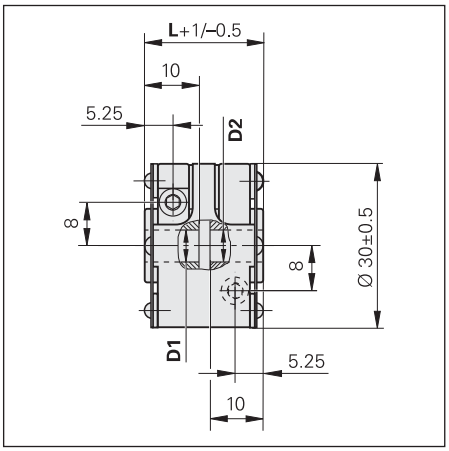

Dimensions in mm

Tolerancing ISO 8015
ISO 2768 - m H
< 6 mm: ±0.2 mm

K 17 Variant	D1	**D2**	L
01	Ø 6 F7	**Ø 6 F7**	22 mm
02	Ø 6 F7	**Ø 10 F7**	22 mm
03	Ø 10 F7	**Ø 10 F7**	30 mm
04	Ø 10 F7	**Ø 10 F7**	22 mm
05	Ø 6 F7	**Ø 9.52 F7**	22 mm
06	Ø 5 F7	**Ø 6 F7**	22 mm

General Mechanical Information

UL certification
All rotary encoders and cables in this brochure comply with the UL safety regulations for the USA and the "CSA" safety regulations for Canada.

Acceleration
Encoders are subject to various types of acceleration during operation and mounting.

- **Vibration**
  The encoders are qualified on a test stand to operate with the specified acceleration values from 55 to 2000 Hz in accordance with EN 60068-2-6. However, if the application or poor mounting cause long-lasting resonant vibration, it can limit performance or even damage the encoder.
  Comprehensive tests of the entire system are required.
- **Shock**
  The encoders are qualified on a test stand to operate with the specified acceleration values and duration in accordance with EN 60068-2-27. This does not include **permanent shock loads,** which **must be tested in the application.**
- The **maximum angular acceleration** is 10^5 rad/s^2 (DIN 32878). This is the highest permissible acceleration at which the rotor will rotate without damage to the encoder. The angular acceleration actually attainable depends on the shaft connection. A sufficient safety factor is to be determined through system tests.

Humidity
The max. permissible relative humidity is 75 %. 93 % is permissible temporarily. Condensation is not permissible.

Magnetic fields
Magnetic fields > 30 mT can impair the proper function of encoders. If required, please contact HEIDENHAIN, Traunreut.

RoHS
HEIDENHAIN has tested the products for harmlessness of the materials as per European Directives 2002/95/EC on the restriction of the use of certain hazardous substances in electrical and electronic equipment (RoHS) and 2002/96/EC (WEEE) on waste electrical and electronic equipment. For a Manufacturer Declaration on RoHS, please refer to your sales agency.

Natural frequencies
The rotor and the couplings of ROC/ROQ/ROD and RIC/RIQ rotary encoders, as also the stator and stator coupling of ECN/EQN/ERN rotary encoders, form a single vibrating spring-mass system.
The **natural frequency f_N** should be as high as possible. A prerequisite for the highest possible natural frequency on **ROC/ROQ/ROD rotary encoders** is the use of a diaphragm coupling with a high torsional rigidity C (see *Shaft Couplings*).

$$f_E = \frac{1}{2 \cdot \pi} \cdot \sqrt{\frac{C}{I}}$$

f_N: Natural frequency in Hz
C: Torsional rigidity of the coupling in Nm/rad
I: Moment of inertia of the rotor in kgm^2

ECN/EQN/ERN rotary encoders with their stator couplings form a vibrating spring-mass system whose **natural frequency f_N** should be as high as possible. If radial and/or axial acceleration forces are added, the stiffness of the encoder bearings and the encoder stators are also significant. If such loads occur in your application, HEIDENHAIN recommends consulting with the main facility in Traunreut.

Protection against contact (EN 60529)
After encoder installation, all rotating parts must be protected against accidental contact during operation.

Protection (EN 60529)
Unless otherwise indicated, all rotary encoders meet protection standard IP 64 (ExN/ROx 400: IP 67) according to EN 60529. This includes housings, cable outlets and flange sockets when the connector is fastened.
The **shaft inlet** provides protection to IP 64. Splash water should not contain any substances that would have harmful effects on the encoder parts. If the standard protection of the shaft inlet is not sufficient (such as when the encoders are mounted vertically), additional labyrinth seals should be provided.
Many encoders are also available with protection to class IP 66 for the shaft inlet. The sealing rings used to seal the shaft are subject to wear due to friction, the amount of which depends on the specific application.

Expendable parts
Encoders from HEIDENHAIN are designed for a long service life. Preventive maintenance is not required. They contain components that are subject to wear, depending on the application and manipulation. These include in particular moving cables.
On encoders with integral bearing, other such components are the bearings, shaft sealing rings on rotary and angle encoders, and sealing lips on sealed linear encoders.

System tests
Encoders from HEIDENHAIN are usually integrated as components in larger systems. Such applications require **comprehensive tests of the entire system** regardless of the specifications of the encoder.
The specifications given in the brochure apply to the specific encoder, not to the complete system. Any operation of the encoder outside of the specified range or for any other than the intended applications is at the user's own risk.
In safety-related systems, the higher-level system must verify the position value of the encoder after switch-on.

Mounting
Work steps to be performed and dimensions to be maintained during mounting are specified solely in the mounting instructions supplied with the unit. All data in this catalog regarding mounting are therefore provisional and not binding; they do not become terms of a contract.

Changes to the encoder
The correct operation and accuracy of encoders from HEIDENHAIN is ensured only if they have not been modified. Any changes, even minor ones, can impair the operation and reliability of the encoders, and result in a loss of warranty. This also includes the use of additional retaining compounds, lubricants (e.g. for screws) or adhesives not explicitly prescribed. In case of doubt, we recommend contacting HEIDENHAIN in Traunreut.

Temperature ranges
For the unit in its packaging, the **storage temperature range** is –30 to 80 °C. The **operating temperature range** indicates the temperatures the encoder may reach during operation in the actual installation environment. The function of the encoder is guaranteed within this range (DIN 32878). The operating temperature is measured on the face of the encoder flange (see dimension drawing) and must not be confused with the ambient temperature.

The temperature of the encoder is influenced by:
- Mounting conditions
- The ambient temperature
- Self-heating of the encoder

The self-heating of an encoder depends both on its design characteristics (stator coupling/solid shaft, shaft sealing ring, etc.) and on the operating parameters (rotational speed, power supply). Temporarily increased self-heating can also occur after very long breaks in operation (of several months). Please take a two-minute run-in period at low speeds into account. Higher heat generation in the encoder means that a lower ambient temperature is required to keep the encoder within its permissible operating temperature range.

These tables show the approximate values of self-heating to be expected in the encoders. In the worst case, a combination of operating parameters can exacerbate self-heating, for example a 30 V power supply and maximum rotational speed. Therefore, the actual operating temperature should be measured directly at the encoder if the encoder is operated near the limits of permissible parameters. Then suitable measures should be taken (fan, heat sinks, etc.) to reduce the ambient temperature far enough so that the maximum permissible operating temperature will not be exceeded during continuous operation.

For high speeds at maximum permissible ambient temperature, special versions are available on request with reduced degree of protection (without shaft seal and its concomitant frictional heat).

Self-heating at supply voltage		**15 V**	**30 V**
	ERN/ROD	Approx. 5 K	Approx. +10 K
	ECN/EQN/ROC/ ROQ/RIC/RIQ	Approx. 5 K	Approx. +10 K

Heat generation at speed n_{max}		
Solid shaft	**ROC/ROQ/ROD/ RIC/RIQ**	Approx. + 5 K with IP 64 protection Approx. + 10 K with IP 66 protection
Blind hollow shaft	**ECN/EQN/ERN 400**	Approx. + 30 K with IP 64 protection Approx. + 40 K with IP 66 protection
	ECN/EQN/ERN 1000	Approx. +10 K
Hollow through shaft	**ECN/ERN 100** **ECN/EQN/ERN 400**	Approx. + 40 K with IP 64 protection Approx. + 50 K with IP 66 protection

An encoder's typical self-heating values depend on its design characteristics at maximum permissible speed. The correlation between rotational speed and heat generation is nearly linear.

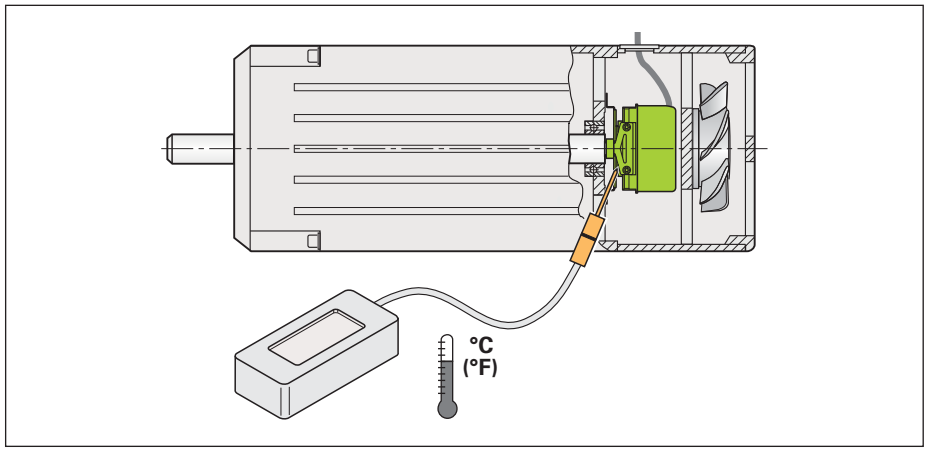

Measuring the actual operating temperature at the defined measuring point of the rotary encoder (see *Specifications*)

ECN/ERN 100 series

- **Rotary encoders with mounted stator coupling**
- **Hollow through shaft up to Ø 50 mm**



ERN 1x0/ECN 113

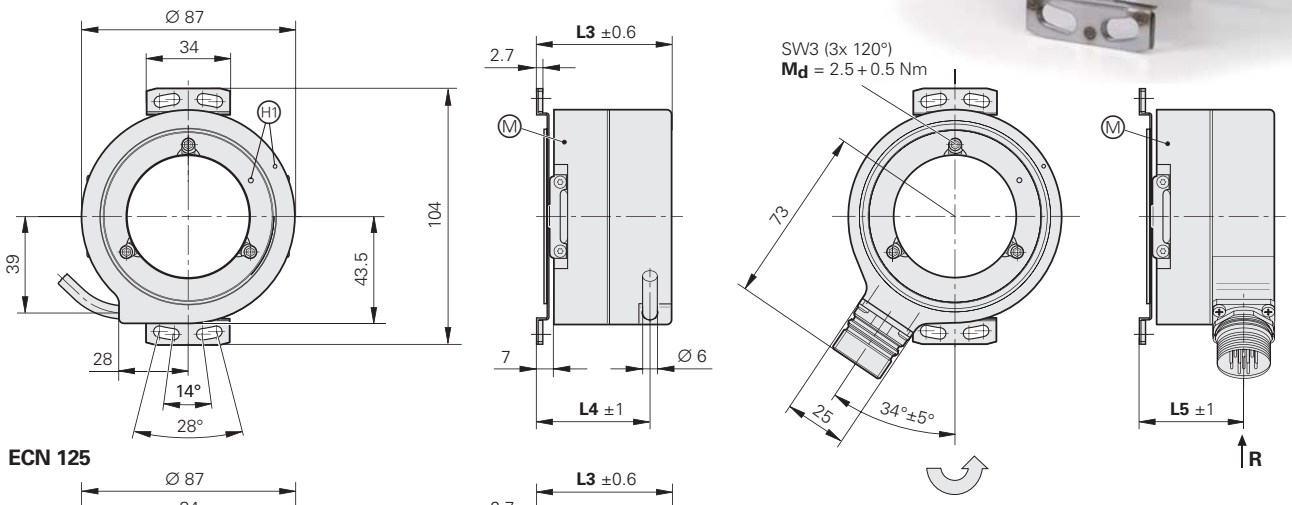

ECN 125

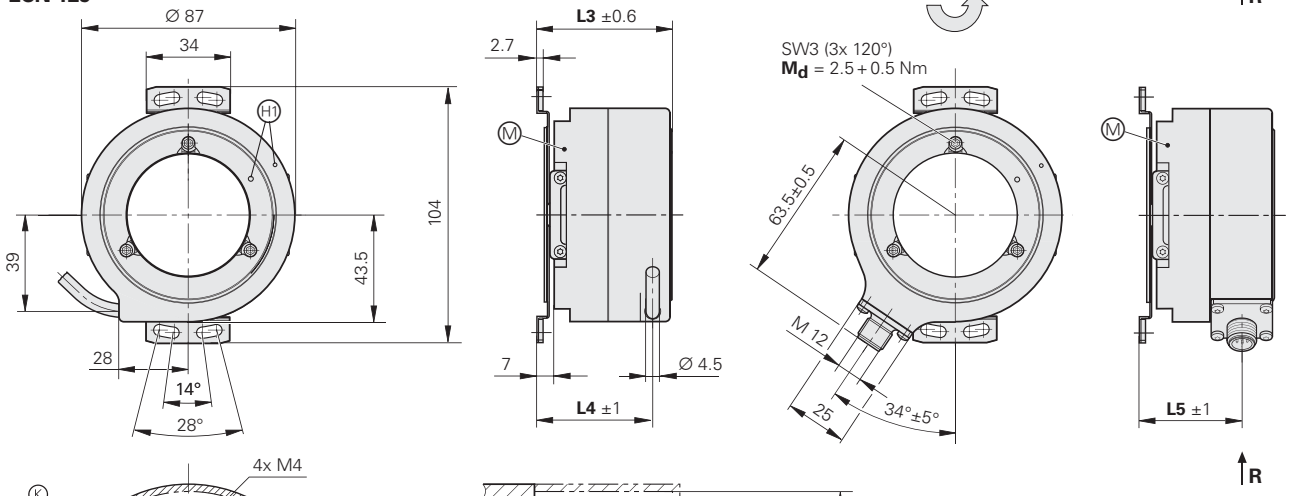

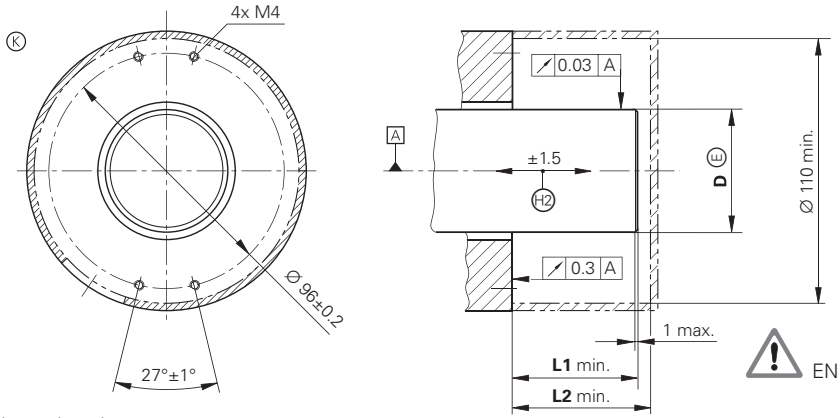

Connector coding
R = radial

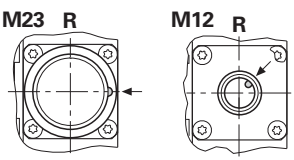

Dimensions in mm

Tolerancing ISO 8015
ISO 2768 - m H
< 6 mm: ±0.2 mm

Cable radial, also usable axially
A = Bearing
K = Required mating dimensions
M = Measuring point for operating temperature
H1 = ERN: reference-mark position ± 15°; ECN: zero position ± 15°
H2 = Compensation of mounting tolerances and thermal expansion, no dynamic motion
Direction of shaft rotation for output signals as per the interface description

D	L1	L2	L3	L4	L5
Ø 20h7	41	43.5	40	32	26.5
Ø 25h7	41	43.5	40	32	26.5
Ø 38h7	56	58.5	55	47	41.5
Ø 50h7	56	58.5	55	47	41.5

	Absolute Singleturn			Incremental		
	ECN 125	**ECN 113**	**ECN 113**	**ERN 120**	**ERN 130**	**ERN 180**
Absolute position values*	**EnDat 2.2**	**EnDat 2.2**	**SSI**	–		
Ordering designation	EnDat 22	EnDat 01	SSI 39n1			
Positions per rev	33 554 432 (25 bits)	8 192 (13 bits)		–		
Code	Pure binary		Gray	–		
Elec. permissible speed Deviations[1]	n_{max} for continuous position value	≤ 600 min^{-1}/n_{max} ± 1 LSB/± 50 LSB		–		
Calculation time t_{cal}	≤ 5 µs	≤ 0.25 µs	≤ 0.5 µs	–		
Incremental signals	None	~ 1 V_{PP}[2]		⊓⊔ TTL	⊓⊔ HTL	~ 1 V_{PP}[2]
Line counts*	–	**2048**		1000 **1024** 2048 2500 3600 **5000**		
Cutoff frequency –3 dB Scanning frequency Edge separation a	– – –	Typ. ≥ 200 kHz – –		– ≤ 300 kHz ≥ 0.39 µs		Typ. ≥ 180 kHz – –
System accuracy	± 20"			1/20 of grating period		
Power supply **Current consumption** without load	3.6 to 5.25 V ≤ 200 mA	5 V ± 5 % ≤ 180 mA	5 V ± 5 %[3] ≤ 180 mA	5 V ± 10 % ≤ 120 mA	10 to 30 V ≤ 150 mA	5 V ± 10 % ≤ 120 mA
Electrical connection*	• **Flange socket** M12, radial • Cable 1 m/5m, with M12 coupling	• **Flange socket** M23, radial • **Cable 1 m**/5 m, with or **without coupling** M23		• **Flange socket** M23, radial • **Cable 1 m**/5 m, with or **without coupling** M23		
Shaft*	Hollow through shaft D = 20 mm, **25 mm,** 38 mm, **50 mm**			Hollow through shaft D = 20 mm, **25 mm,** 38 mm, **50 mm**		
Mech. perm. speed n_{max}[4]	*D > 30 mm:* ≤ 4 000 min^{-1} *D ≤ 30 mm:* ≤ 6 000 min^{-1}			*D > 30 mm:* ≤ 4 000 min^{-1} *D ≤ 30 mm:* ≤ 6 000 min^{-1}		
Starting torque at 20 °C	*D > 30 mm:* ≤ 0.2 Nm *D ≤ 30 mm:* ≤ 0.15 Nm			*D > 30 mm:* ≤ 0.2 Nm *D ≤ 30 mm:* ≤ 0.15 Nm		
Moment of inertia of rotor	*D = 50 mm* 220 · 10^{-6} kgm^2 *D = 38 mm* 350 · 10^{-6} kgm^2 *D = 25 mm* 96 · 10^{-6} kgm^2 *D = 20 mm* 100 · 10^{-6} kgm^2			*D = 50 mm* 220 · 10^{-6} kgm^2 *D = 38 mm* 350 · 10^{-6} kgm^2 *D = 25 mm* 95 · 10^{-6} kgm^2 *D = 20 mm* 100 · 10^{-6} kgm^2		
Permissible axial motion of measured shaft	± 1.5 mm			± 1.5 mm		
Vibration 55 to 2 000 Hz **Shock** 6 ms	≤ 200 m/s^2[5] (EN 60 068-2-6) ≤ 1 000 m/s^2 (EN 60 068-2-27)			≤ 200 m/s^2[5] (EN 60 068-2-6) ≤ 1 000 m/s^2 (EN 60 068-2-27)		
Max. operating temperature[4]	100 °C			100 °C	85 °C (100 °C at U_P < 15 V)	100 °C
Min. operating temperature	*Flange socket or fixed cable:* –40 °C *Moving cable:* –10 °C			*Flange socket or fixed cable:* –40 °C *Moving cable:* –10 °C		
Protection[4] EN 60 529	IP 64			IP 64		
Weight	0.6 kg to 0.9 kg depending on the hollow shaft version			0.6 kg to 0.9 kg depending on the hollow shaft version		

Bold: These preferred versions are available on short notice
***** Please select when ordering
1) Velocity-dependent deviations between the absolute value and incremental signal
2) Restricted tolerances: Signal amplitude 0.8 to 1.2 V_{PP}
3) 10 to 30 V via connecting cable with voltage converter
4) For the correlation between the protection class, shaft speed and operating temperature, see *General Mechanical Information*
5) 100 m/s^2 with flange socket version

ECN/EQN/ERN 400 Series

- **Rotary encoders with mounted stator coupling**
- **Blind hollow shaft or hollow through shaft**
- **Functional Safety for ECN 425 and EQN 437 upon request**



Blind hollow shaft

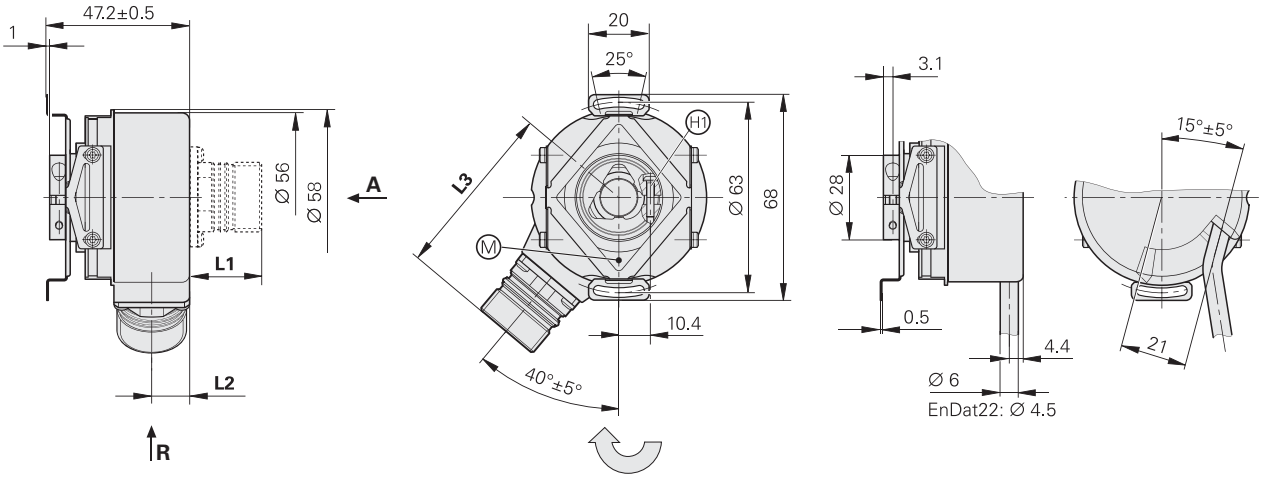

Hollow through shaft

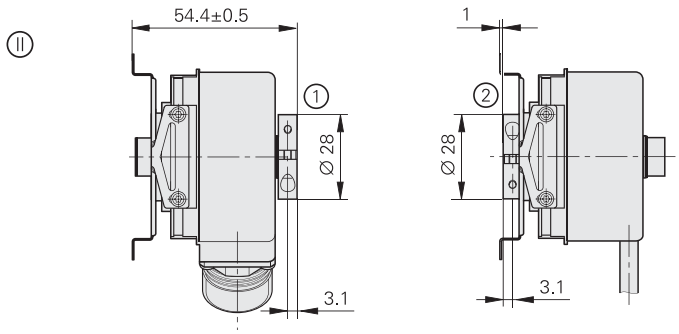

Connector coding
A = axial, **R** = radial

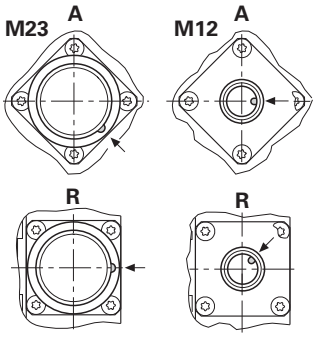

	Flange socket	
	M12	M23
L1	14	23.6
L2	12.5	12.5
L3	48.5	58.1

D
Ø 8g7 Ⓔ
Ø 12g7 Ⓔ

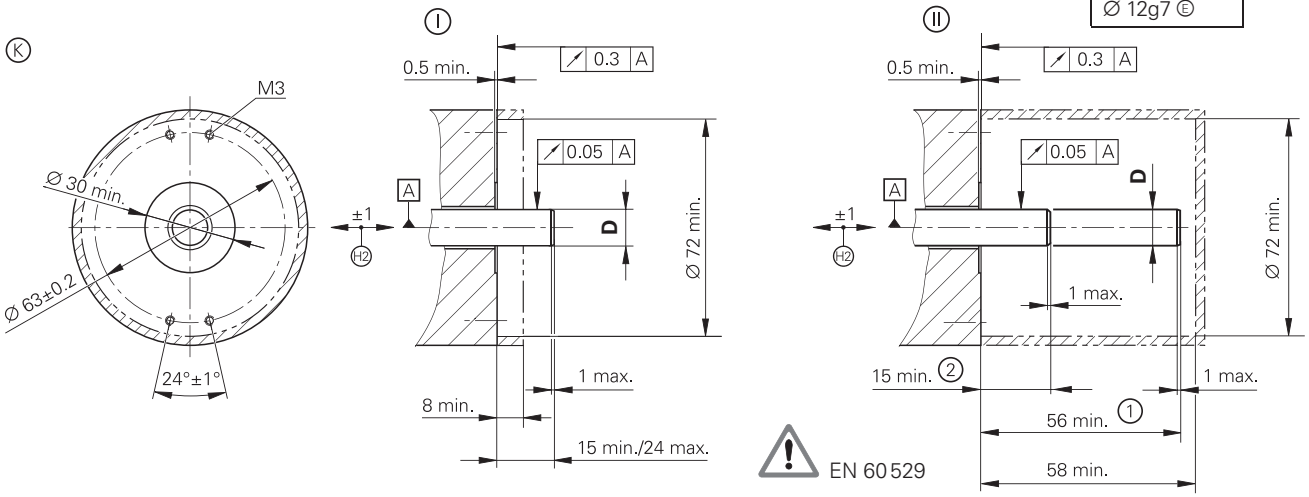

Dimensions in mm

Tolerancing ISO 8015
ISO 2768 - m H
< 6 mm: ±0.2 mm

Cable radial, also usable axially
A = Bearing of mating shaft
B = Bearing of encoder
K = Required mating dimensions
M = Measuring point for operating temperature
H1 = Clamping screw with X8 hexalobular socket
H2 = Compensation of mounting tolerances and thermal expansion, no dynamic motion permitted
1 = Clamping ring on housing side (condition upon delivery)
2 = Clamping ring on coupling side (optionally mountable)
Direction of shaft rotation for output signals as per the interface description

	Incremental			
	ERN 420	**ERN 460**	**ERN 430**	**ERN 480**
Incremental signals	⊓⊔ TTL		⊓⊔ HTL	∿ 1 V_{PP} [1]
Line counts*	250 500			–
	1000 1024 1250 2000 2048 2500 3600 4096 5000			
Cutoff frequency –3 dB Scanning frequency Edge separation a	– ≤ 300 kHz ≥ 0.39 µs			≥ 180 kHz – –
System accuracy	1/20 of grating period			
Power supply **Current consumption** without load	5 V ± 10 % 120 mA	10 to 30 V 100 mA	10 to 30 V 150 mA	5 V ± 10 % 120 mA
Electrical connection*	• **Flange socket** M23, radial and axial (with blind hollow shaft) • **Cable** 1 m, **without connecting element**			
Shaft*	**Blind hollow shaft** or **hollow through shaft; D = 8 mm** or **D = 12 mm**			
Mech. perm. speed n [2]	≤ 6000 min^{-1}/≤ 12000 min^{-1} [3]			
Starting torque at 20 °C below –20 °C	*Blind hollow shaft:* ≤ 0.01 Nm *Hollow through shaft:* ≤ 0.025 Nm ≤ 1 Nm			
Moment of inertia of rotor	≤ 4.3 · 10^{-6} kgm^2			
Permissible axial motion of measured shaft	± 1 mm			
Vibration 55 to 2000 Hz **Shock** 6 ms/2 ms	≤ 300 m/s^2; *flange socket version:* 150 m/s^2 (EN 60068-2-6) ≤ 1000 m/s^2/≤ 2000 m/s^2 (EN 60068-2-27)			
Max. operating temp. [2]	100 °C	70 °C	100 °C [4]	
Min. operating temp.	*Flange socket or fixed cable:* –40 °C *Moving cable:* –10 °C			
Protection EN 60529	IP 67 at housing (IP 66 with hollow through shaft); IP 64 at shaft inlet			
Weight	Approx. 0.3 kg			

Bold: These preferred versions are available on short notice

***** Please select when ordering

1) Restricted tolerances: Signal amplitude 0.8 to 1.2 V_{PP}

2) For the correlation between the operating temperature and the shaft speed or supply voltage, see *General Mechanical Information*

3) With two shaft clamps (only for hollow through shaft)

4) 80° for ERN 480 with 4096 or 5000 lines

	**Absolute** **Singleturn** **ECN 425** Functional Safety	**ECN 413**	**ECN 413**
Absolute position values*	**EnDat 2.2**	**EnDat 2.2**	**SSI**
Ordering designation	EnDat 22	EnDat 01	SSI 39r1
Positions per revolution	33 554 432 (25 bits)	8 192 (13 bits)	
Revolutions	–		
Code	Pure binary		Gray
Elec. permissible speed Deviations[1]	≤ 12 000 min^{-1} for continuous position value	*512 lines:* ≤ 5 000/12 000 min^{-1} ± 1 LSB/± 100 LSB *2048 lines:* ≤ 1 500/12 000 min^{-1} ± 1 LSB/± 50 LSB	≤ 12 000 min^{-1} ± 12 LSB
Calculation time t_{cal}	≤ 7 µs	≤ 9 µs	≤ 5 µs
Incremental signals	Without	~ 1 V_{PP}[2]	
Line counts*	–	**512** 2048	**512**
Cutoff frequency –3 dB Scanning frequency Edge separation a	– – –	*512 lines:* ≥ 130 kHz; *2048 lines:* ≥ 400 kHz – –	
System accuracy	± 20“	*512 lines:* ± 60“; *2048 lines:* ± 20“	
Power supply*	**3.6 to 14 V**	**3.6 to 14 V**	5 V ± 5 % or **10 to 30 V**
Power consumption (maximum)	*3.6 V:* ≤ 600 mW *14 V:* ≤ 700 mW		*5 V:* ≤ 800 NW *10 V:* ≤ 650 NW *30 V:* ≤ 1 000 NW
Current consumption (typical; without load)	*5 V:* 85 mA		*5 V:* 90 mA *24 V:* 24 mA
Electrical connection*	• **Flange socket** M12, radial • Cable 1 m, with M12 coupling	• **Flange socket** M23, radial • Cable 1 m, with M23 coupling or without connecting element	
Shaft*	**Blind hollow shaft** or **hollow through shaft; D = 8 mm** or **D = 12 mm**		
Mech. perm. speed n[3]	≤ 6 000 min^{-1}/≤ 12 000 min^{-1} [4]		
Starting torque at 20 °C below –20 °C	*Blind hollow shaft:* ≤ 0.01 Nm *Hollow through shaft:* ≤ 0.025 Nm ≤ 1 Nm		
Moment of inertia of rotor	≤ 4.3 · 10^{-6} kgm^2		
Permissible axial motion of measured shaft	± 1 mm		
Vibration 55 to 2 000 Hz **Shock** 6 ms/2 ms	≤ 300 m/s^2; *flange socket version:* 150 m/s^2 (EN 60 068-2-6) ≤ 1 000 m/s^2/≤ 2 000 m/s^2 (EN 60 068-2-27)		
Max. operating temp.[3]	100 °C		
Min. operating temp.	*Flange socket or fixed cable:* –40 °C *Moving cable:* –10 °C		
Protection EN 60 529	IP 67 at housing; IP 64 at shaft inlet		
Weight	Approx. 0.3 kg		

Bold: These preferred versions are available on short notice

* Please select when ordering

1) Velocity-dependent deviations between the absolute value and incremental signal

2) Restricted tolerances: Signal amplitude 0.8 to 1.2 V_{PP}

	Multiturn		
	EQN 437 Functional Safety	**EQN 425**	**EQN 425**
	EnDat 2.2	**EnDat 2.2**	**SSI**
	EnDat 22	EnDat 01	SSI 41r1
	33554432 (25 bits)	8192 (13 bits)	
	4096		
	Pure binary		Gray
	≤ 12000 min^{-1} for continuous position value	*512 lines:* ≤ 5000/10000 min^{-1} ± 1 LSB/± 100 LSB *2048 lines:* ≤ 1500/10000 min^{-1} ± 1 LSB/± 50 LSB	≤ 12000 min^{-1} ± 12 LSB
	≤ 7 µs	≤ 9 µs	≤ 5 µs
	None	~ 1 V_{PP} [2]	
	–	**512** 2048	**512**
	– – –	*512 lines:* ≥ 130 kHz; *2048 lines:* ≥ 400 kHz – –	
	± 20“	*512 lines:* ± 60“; *2048 lines:* ± 20“	
	3.6 to 14 V	**3.6 to 14 V**	5 V ± 5 % or **10 to 30 V**
	3.6 V: ≤ 700 NW *14 V:* ≤ 800 NW		*5 V:* ≤ 950 NW *10 V:* ≤ 750 NW *30 V:* ≤ 1100 NW
	5 V: 105 mA		*5 V:* 120 mA *24 V:* 28 mA
	• **Flange socket** M12, radial • Cable 1 m, with M12 coupling	• **Flange socket** M23, radial • Cable 1 m, with M23 coupling or without connecting element	

[3] For the correlation between the operating temperature and the shaft speed or supply voltage, see *General Mechanical Information*
[4] With two shaft clamps (only for hollow through shaft)
Functional Safety for ECN 425 and EQN 437 upon request

ECN/EQN/ERN 400 Series

- **Rotary encoders with mounted universal stator coupling**
- **Blind hollow shaft or hollow through shaft**



Blind hollow shaft

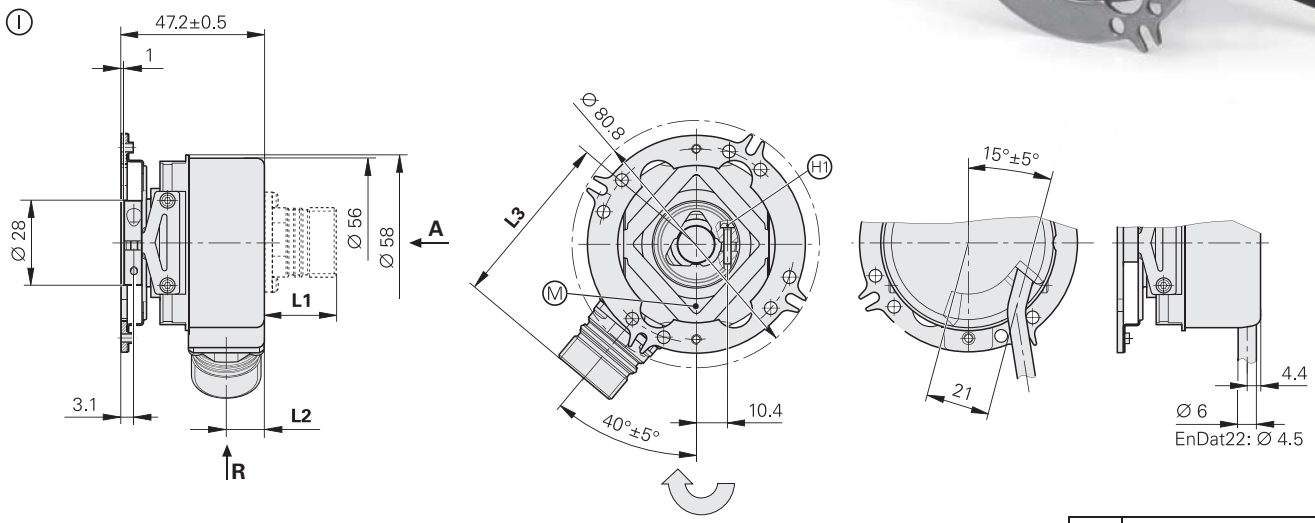

Hollow through shaft

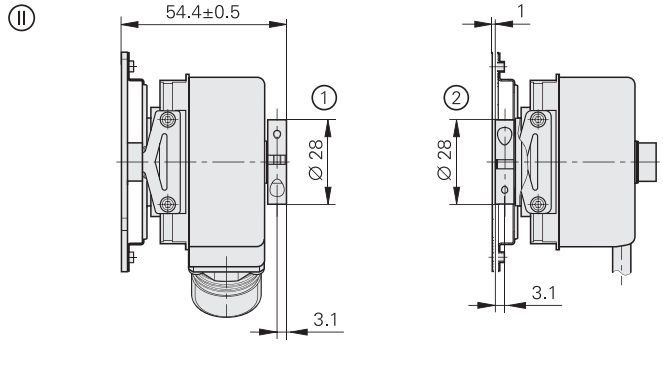

Connector coding
A = axial, **R** = radial

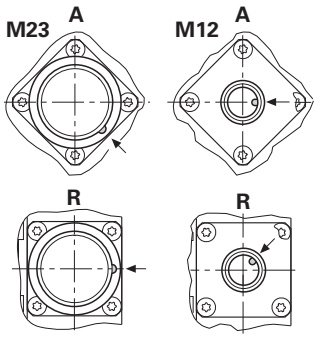

	Flange socket	
	M12	**M23**
L1	14	23.6
L2	12.5	12.5
L3	48.5	58.1

D
Ø 8g7 Ⓔ
Ø 12g7 Ⓔ

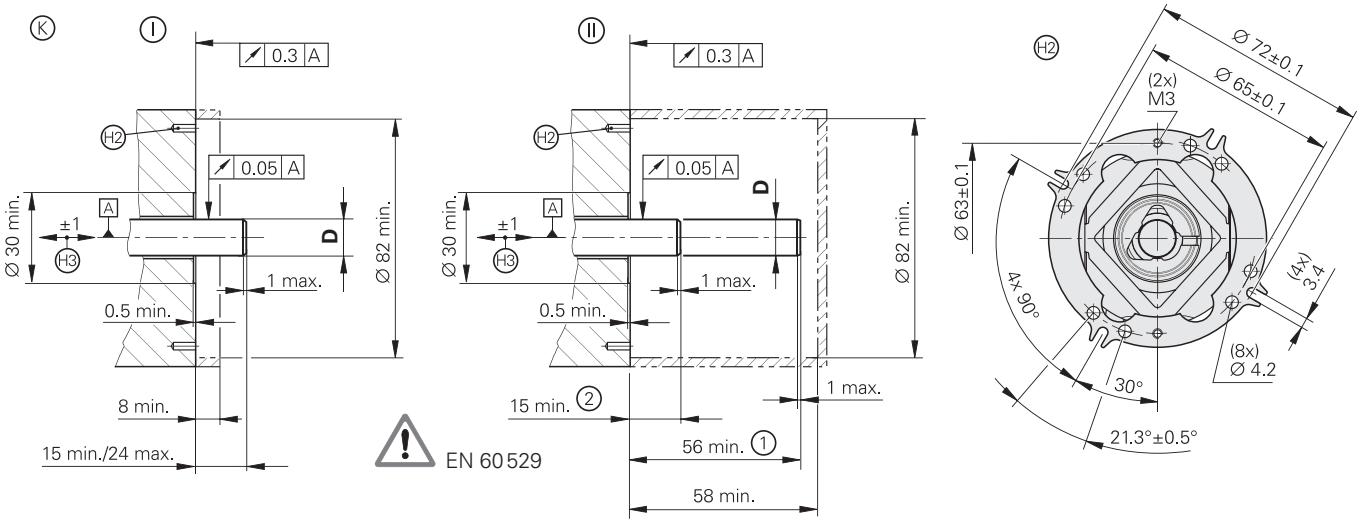

Dimensions in mm

Tolerancing ISO 8015
ISO 2768 - m H
< 6 mm: ±0.2 mm

Cable radial, also usable axially
Ⓐ = Bearing
Ⓑ = Bearing of encoder
Ⓜ = Measuring point for operating temperature
Ⓚ = Required mating dimensions
Ⓗ1 = Clamping screw with X8 hexalobular socket
Ⓗ2 = Hole circle for fastening, see coupling
Ⓗ3 = Compensation of mounting tolerances and thermal expansion, no dynamic motion permitted
① = Clamping ring on housing side (condition upon delivery)
② = Clamping ring on coupling side (optionally mountable)
Direction of shaft rotation for output signals as per the interface description

	Incremental			
	ERN 420	**ERN 460**	**ERN 430**	**ERN 480**
Incremental signals	⊓⊔ TTL		⊓⊔ HTL	∿ 1 V_{PP} [1]
Line counts*	250 500			–
	1000 1024 1250 2000 2048 2500 3600 4096 5000			
Cutoff frequency –3 dB Scanning frequency Edge separation a	– ≤ 300 kHz ≥ 0.39 µs			≥ 180 kHz – –
System accuracy	1/20 of grating period			
Power supply **Current consumption** without load	5 V ± 10 % 120 mA	10 to 30 V 100 mA	10 to 30 V 150 mA	5 V ± 10 % 120 mA
Electrical connection*	• **Flange socket** M23, radial and axial (with blind hollow shaft) • **Cable** 1 m, **without connecting element**			
Shaft*	**Blind hollow shaft** or **hollow through shaft; D = 8 mm** or **D = 12 mm**			
Mech. perm. speed n [2]	≤ 6000 min^{-1}/≤ 12000 min^{-1} [3]			
Starting torque at 20 °C below –20 °C	*Blind hollow shaft:* ≤ 0.01 Nm *Hollow through shaft:* ≤ 0.025 Nm ≤ 1 Nm			
Moment of inertia of rotor	≤ 4.3 · 10^{-6} kgm^2			
Permissible axial motion of measured shaft	± 1 mm			
Vibration 55 to 2000 Hz **Shock** 6 ms/2 ms	≤ 300 m/s^2; *flange socket version:* 150 m/s^2 (EN 60068-2-6) ≤ 1000 m/s^2/≤ 2000 m/s^2 (EN 60068-2-27)			
Max. operating temp. [2]	100 °C	70 °C	100 °C [4]	
Min. operating temp.	*Flange socket or fixed cable:* –40 °C *Moving cable:* –10 °C			
Protection EN 60529	*At housing:* IP 67 (IP 66 for hollow through shaft) *At shaft inlet:* IP 64 (IP 66 upon request)			
Weight	Approx. 0.3 kg			

Bold: These preferred versions are available on short notice

* Please select when ordering

1) Restricted tolerances: Signal amplitude 0.8 to 1.2 V_{PP}

2) For the correlation between the operating temperature and the shaft speed or supply voltage, see *General Mechanical Information*

3) With two shaft clamps (only for hollow through shaft)

4) 80° for ERN 480 with 4096 or 5000 lines

	**Absolute** **Singleturn**		
	ECN 425	**ECN 413**	**ECN 413**
Absolute position values*	**EnDat 2.2**	**EnDat 2.2**	**SSI**
Ordering designation	EnDat 22	EnDat 01	SSI 39r1
Positions per revolution	33 554 432 (25 bits)	8 192 (13 bits)	
Revolutions	–		
Code	Pure binary		Gray
Elec. permissible speed Deviations[1]	≤ 12 000 min^{-1} for continuous position value	*512 lines:* ≤ 5 000/12 000 min^{-1} ± 1 LSB/± 100 LSB *2048 lines:* ≤ 1 500/12 000 min^{-1} ± 1 LSB/± 50 LSB	≤ 12 000 min^{-1} ± 12 LSB
Calculation time t_{cal}	≤ 7 µs	≤ 9 µs	≤ 5 µs
Incremental signals	None	~ 1 V_{PP}[2]	
Line counts*	–	**512** 2048	**512**
Cutoff frequency –3 dB Scanning frequency Edge separation a	– – –	*512 lines:* ≥ 130 kHz; *2048 lines:* ≥ 400 kHz – –	
System accuracy	± 20“	*512 lines:* ± 60“; *2048 lines:* ± 20“	
Power supply*	**3.6 to 14 V**	**3.6 to 14 V**	5 V ± 5 % or **10 to 30 V**
Power consumption (maximum)	*3.6 V:* ≤ 600 NW *14 V:* ≤ 700 NW		*5 V:* ≤ 800 NW *10 V:* ≤ 650 NW *30 V:* ≤ 1 000 NW
Current consumption (typical; without load)	*5 V:* 85 mA		*5 V:* 90 mA *24 V:* 24 mA
Electrical connection*	• **Flange socket** M12, radial • Cable 1 m, with M12 coupling	• **Flange socket** M23, radial • Cable 1 m, with M23 coupling or without connecting element	
Shaft*	**Blind hollow shaft** or **hollow through shaft; D = 8 mm** or **D = 12 mm**		
Mech. perm. speed n[3]	≤ 6 000 min^{-1}/≤ 12 000 min^{-1} [4]		
Starting torque at 20 °C below –20 °C	*Blind hollow shaft:* ≤ 0.01 Nm *Hollow through shaft:* ≤ 0.025 Nm ≤ 1 Nm		
Moment of inertia of rotor	≤ 4.3 · 10^{-6} kgm^2		
Permissible axial motion of measured shaft	± 1 mm		
Vibration 55 to 2 000 Hz **Shock** 6 ms/2 ms	≤ 300 m/s^2; *flange socket version:* 150 m/s^2 (EN 60 068-2-6) ≤ 1 000 m/s^2/≤ 2 000 m/s^2 (EN 60 068-2-27)		
Max. operating temp.[3]	100 °C		
Min. operating temp.	*Flange socket or fixed cable:* –40 °C *Moving cable:* –10 °C		
Protection EN 60 529	IP 67 at housing, IP 64 at shaft end (IP 66 available on request)		
Weight	Approx. 0.3 kg		

Bold: These preferred versions are available on short notice

* Please select when ordering

1) Velocity-dependent deviations between the absolute value and incremental signal

	Multiturn		
	EQN 437	**EQN 425**	**EQN 425**
	EnDat 2.2	**EnDat 2.2**	**SSI**
	EnDat 22	EnDat 01	SSI 41r1
	33554432 (25 bits)	8192 (13 bits)	
	4096		
	Pure binary		Gray
	≤ 12000 min^{-1} for continuous position value	*512 lines:* ≤ 5000/10000 min^{-1} ± 1 LSB/± 100 LSB *2048 lines:* ≤ 1500/10000 min^{-1} ± 1 LSB/± 50 LSB	≤ 12000 min^{-1} ± 12 LSB
	≤ 7 µs	≤ 9 µs	≤ 5 µs
	None	∿ 1 V_{PP} [2]	
	–	**512** 2048	**512**
	– – –	*512 lines:* ≥ 130 kHz; *2048 lines:* ≥ 400 kHz – –	
	± 20“	*512 lines:* ± 60“; *2048 lines:* ± 20“	
	3.6 to 14 V	**3.6 to 14 V**	5 V ± 5 % or **10 to 30 V**
	3.6 V: ≤ 700 NW *14 V:* ≤ 800 NW		*5 V:* ≤ 950 NW *10 V:* ≤ 750 NW *30 V:* ≤ 1100 NW
	5 V: 105 mA		*5 V:* 120 mA *24 V:* 28 mA
	• **Flange socket** M12, radial • Cable 1 m, with M12 coupling	• **Flange socket** M23, radial • Cable 1 m, with M23 coupling or without connecting element	

[2] Restricted tolerances: Signal amplitude 0.8 to 1.2 V_{PP}
[3] For the correlation between the operating temperature and the shaft speed or supply voltage, see *General Mechanical Information*
[4] With two shaft clamps (only for hollow through shaft)

ECN/EQN/ERN 1000 Series



- **Rotary encoders with mounted stator coupling**
- **Compact dimensions**
- **Blind hollow shaft Ø 6 mm**
- **Functional Safety for ECN 1023 and EQN 1035 upon request**

ECN/EQN

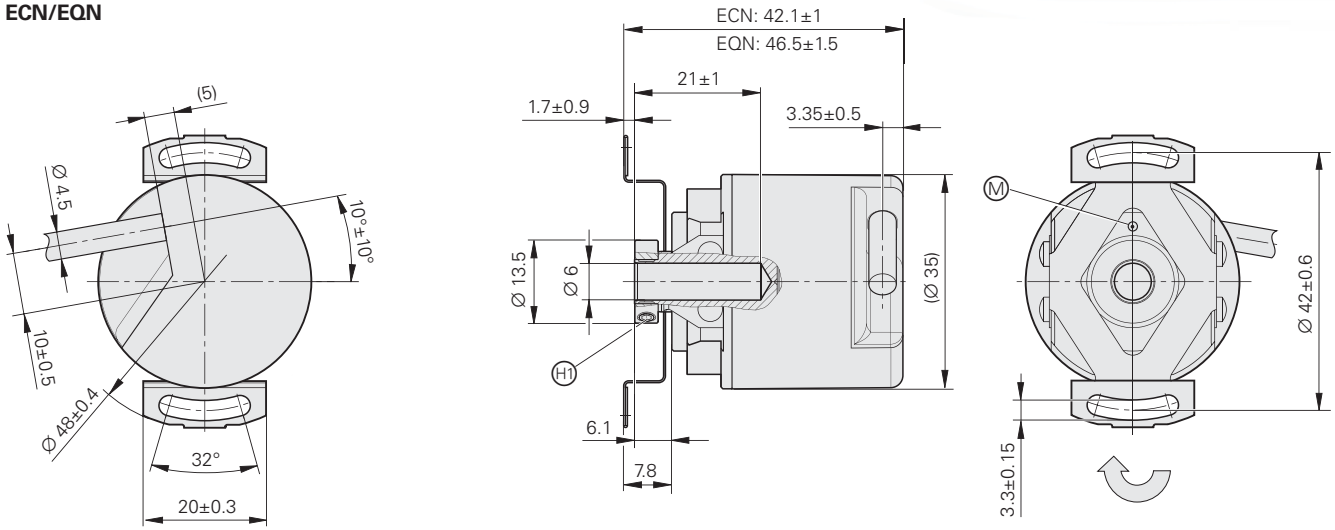

ERN

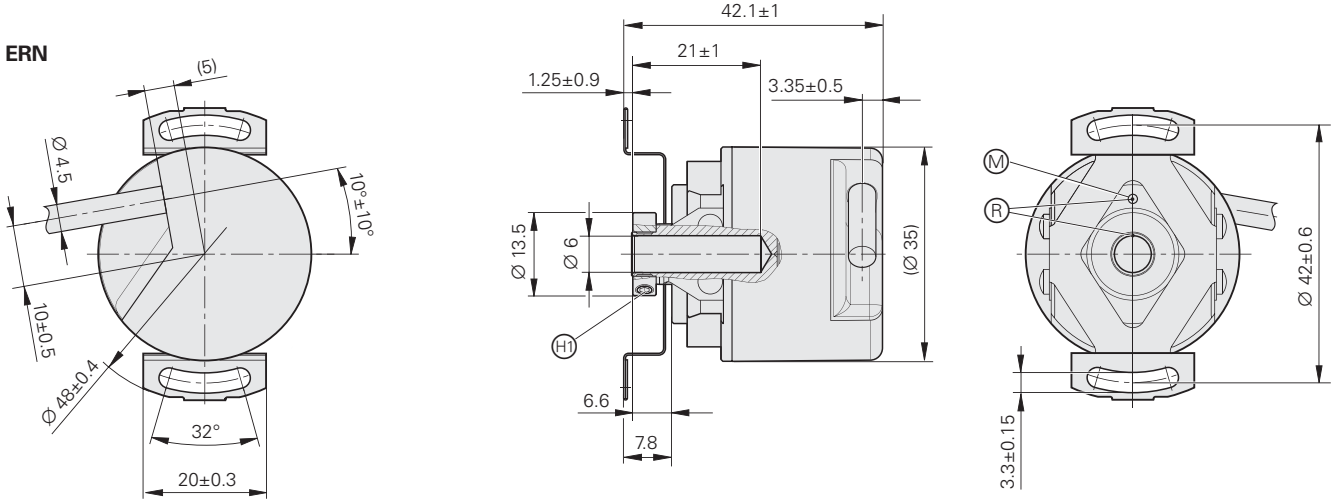

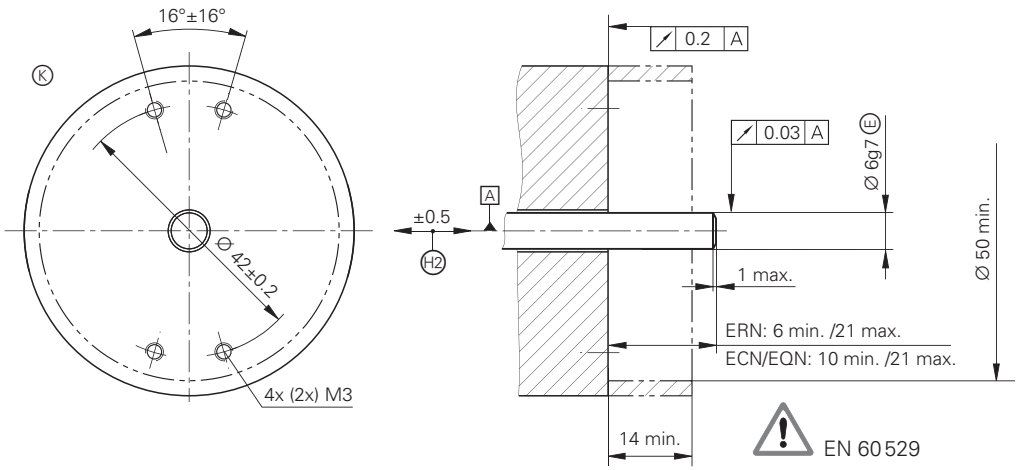

Dimensions in mm

Tolerancing ISO 8015
ISO 2768 - m H
< 6 mm: ±0.2 mm

Ⓐ = Bearing of mating shaft
Ⓚ = Required mating dimensions
Ⓜ = Measuring point for operating temperature
Ⓡ = Reference mark position ± 20°
Ⓗ1 = 2 screws in clamping ring. Tightening torque 0.6±0.1 Nm, width across flats 1.5
Ⓗ2 = Compensation of mounting tolerances and thermal expansion, no dynamic motion
Direction of shaft rotation for output signals as per the interface description

	Incremental			
	ERN 1020	**ERN 1030**	**ERN 1080**	**ERN 1070**
Incremental signals	⊓⊔TTL	⊓⊔ HTLs	∿ 1 V_{PP}[1)]	⊓⊔TTL
Line counts*	100 200 **250** 360 400 **500** 720 900 **1000** **1024** 1250 1500 2000 **2048** **2500** **3600**			**1000** **2500** **3600**
Integrated interpolation*	–			5-fold / 10-fold
Cutoff frequency –3 dB Scanning frequency Edge separation a	– ≤ 300 kHz ≥ 0.39 µs	– ≤ 160 kHz ≥ 0.76 µs	≥ 180 kHz – –	– ≤ 100 kHz ≥ 0.47 µs / – ≤ 100 kHz ≥ 0.22 µs
System accuracy	1/20 of grating period			
Power supply **Current consumption** without load	5 V ± 10 % ≤ 120 mA	10 to 30 V ≤ 150 mA	5 V ± 10 % ≤ 120 mA	5 V ± 5 % ≤ 155 mA
Electrical connection*	**Cable 1 m**/5 m, with or **without coupling** M23			**Cable 5 m without** M23 **coupling**
Shaft	Blind hollow shaft D = 6 mm			
Mech. permissible speed n	≤ 12000 min^{-1}			
Starting torque	≤ 0.001 Nm (at 20 °C)			
Moment of inertia of rotor	≤ 0.5 · 10^{-6} kgm^2			
Permissible axial motion of measured shaft	± 0.5 mm			
Vibration 55 to 2000 Hz **Shock** 6 ms	≤ 100 m/s^2 (EN 60068-2-6) ≤ 1000 m/s^2 (EN 60068-2-27)			
Max. operating temp.[2)]	100 °C	70 °C	100 °C	70 °C
Min. operating temp.	*For fixed cable:* –30 °C *Moving cable:* –10 °C			
Protection EN 60529	IP 64			
Weight	Approx. 0.1 kg			

Bold: These preferred versions are available on short notice

***** Please select when ordering

1) Restricted tolerances: Signal amplitude 0.8 to 1.2 V_{PP}

2) For the correlation between the operating temperature and the shaft speed or supply voltage, see *General Mechanical Information*

	Absolute Singleturn ECN 1023 Functional Safety	ECN 1013
Absolute position values	**EnDat 2.2**	
Ordering designation	EnDat 22	EnDat 01
Positions per revolution	8388608 (23 bits)	8192 (13 bits)
Revolutions	–	
Code	Pure binary	
Elec. permissible speed Deviations[1]	12000 min^{-1} (for continuous position value)	4000 min^{-1}/12000 min^{-1} ± 1 LSB/± 16 LSB
Calculation time t_{cal}	≤ 7 µs	≤ 9 µs
Incremental signals	–	~ 1 V_{PP}[2]
Line count	–	512
Cutoff frequency –3 dB	–	≥ 190 kHz
System accuracy	± 60"	
Power supply	3.6 V to 14 V	
Power consumption (maximum)	*3.6 V:* ≤ 600 NW *14 V:* ≤ 700 NW	
Current consumption (typical; without load)	*5 V:* 85 mA	
Electrical connection	Cable 1 m, with M12 coupling	Cable 1 m, with M23 coupling
Shaft	Blind hollow shaft Ø 6 mm	
Mech. permissible speed n	12000 min^{-1}	
Starting torque	≤ 0.001 Nm (at 20 °C)	
Moment of inertia of rotor	Approx. 0.5 · 10^{-6} kgm^2	
Permissible axial motion of measured shaft	± 0.5 mm	
Vibration 55 to 2000 Hz **Shock** 6 ms	≤ 100 m/s^2 (EN 60068-2-6) ≤ 1000 m/s^2 (EN 60068-2-27)	
Max. operating temp.	100 °C	
Min. operating temp.	*For fixed cable:* –30 °C *Moving cable:* –10 °C	
Protection EN 60529	IP 64	
Weight	Approx. 0.1 kg	

[1] Velocity-dependent deviations between the absolute and incremental signals
[2] Restricted tolerances: Signal amplitude 0.80 to 1.2 V_{PP}
Functional Safety for ECN 1023 and EQN 1035 upon request

	Multiturn EQN 1035	EQN 1025
	EnDat 22	EnDat 01
	8388608 (23 bits)	8192 (13 bits)
	4096 (12 bits)	
	12000 min^{-1} (for continuous position value)	4000 min^{-1}/12000 min^{-1} ± 1 LSB/± 16 LSB
	≤ 7 µs	≤ 9 µs
	–	~ 1 V_{PP} [2)]
	–	512
	–	≥ 190 kHz
	3.6 V: ≤ 700 NW *14 V:* ≤ 800 NW	
	5 V: 105 mA	
	Cable 1 m, with M12 coupling	Cable 1 m, with M23 coupling
	≤ 0.002 Nm (at 20 °C)	

ROC/ROQ/ROD 400 and RIC/RIQ 400 series

With Synchro Flange



- **Rotary encoders for separate shaft coupling**
- **Functional Safety for ROC 425/ROQ 437 upon request**

ROC/ROQ/ROD 4xx
RIC/RIQ 4xx

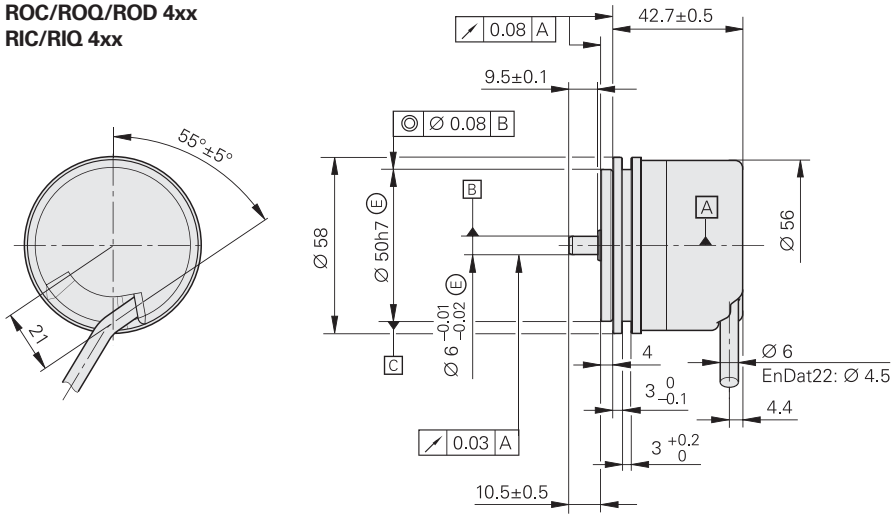

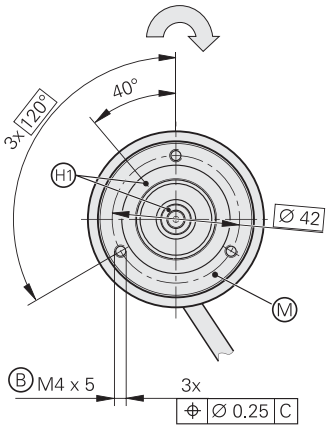

Connector coding
A = axial, **R** = radial

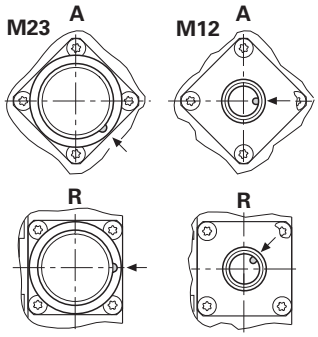

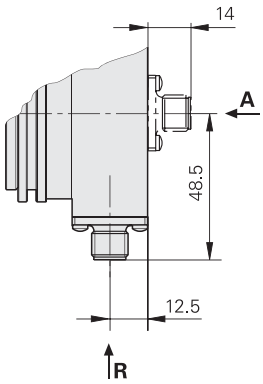

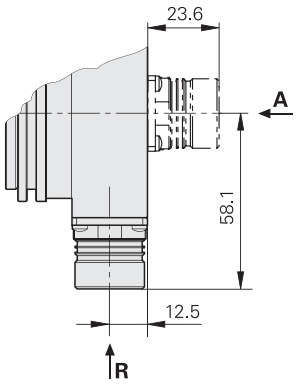

ROC 413/ROQ 425 with PROFIBUS DP

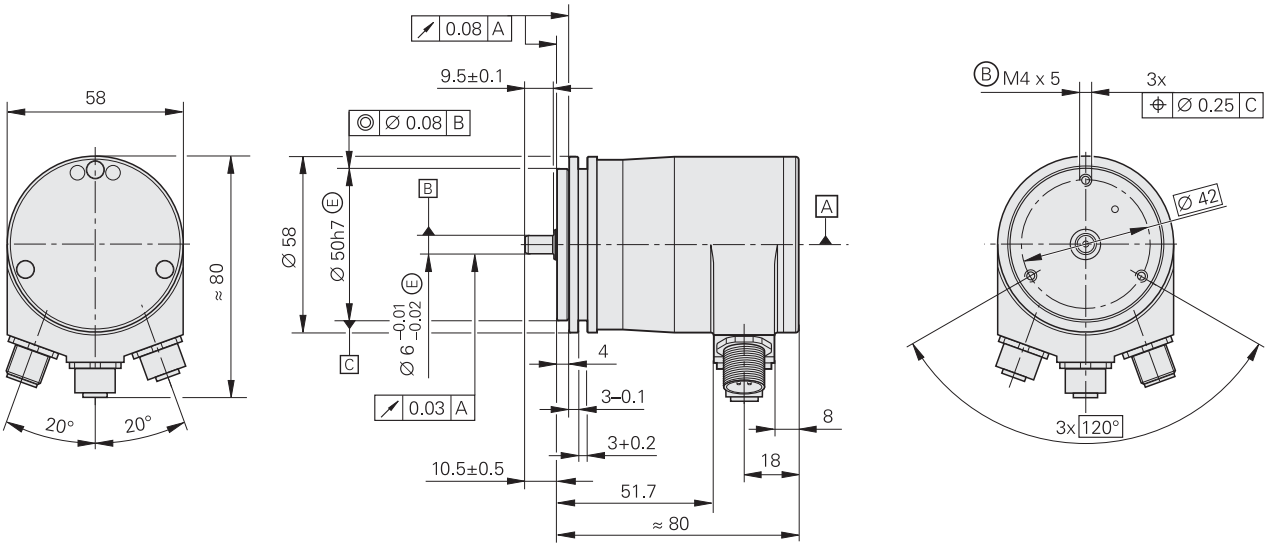

Dimensions in mm

Tolerancing ISO 8015
ISO 2768 - m H
< 6 mm: ±0.2 mm

Cable radial, also usable axially
A = Bearing
B = Threaded mounting hole
M = Measuring point for operating temperature
H1 = ROD reference mark position on shaft and flange ±30°
Direction of shaft rotation for output signals as per the interface description

	Incremental			
	ROD 426	**ROD 466**	**ROD 436**	**ROD 486**
Incremental signals	⊓⊔ TTL		⊓⊔ HTL	∿ 1 V_{PP} [1]
Line counts*	50 100 150 200 250 360 **500** 512 720			–
	1000 1024 1250 1500 1800 **2000 2048 2500 3600 4096 5000**			
	6000 [2] 8192 [2] 9000 [2] 10000 [2]		–	
Cutoff frequency –3 dB Scanning frequency Edge separation a	– ≤ 300 kHz/≤ 150 kHz [2] ≥ 0.39 µs/≥ 0.25 µs [2]			≥ 180 kHz – –
System accuracy	1/20 of grating period (see page 1)			
Power supply **Current consumption** without load	5 V ± 10 % 120 mA	10 to 30 V 100 mA	10 to 30 V 150 mA	5 V ± 10 % 120 mA
Electrical connection*	• **Flange socket** M23, radial and axial • **Cable 1 m/**5 m, with or **without coupling** M23			
Shaft	Solid shaft D = 6 mm			
Mech. permissible speed n	≤ 16000 min^{-1}			
Starting torque	≤ 0.01 Nm (at 20 °C)			
Moment of inertia of rotor	≤ 2.7 · 10^{-6} kgm^2			
Shaft load [3]	Axial 10 N/radial 20 N at shaft end			
Vibration 55 to 2000 Hz **Shock** 6 ms/2 ms	≤ 300 m/s^2 (EN 60068-2-6) ≤ 1000 m/s^2/≤ 2000 m/s^2 (EN 60068-2-27)			
Max. operating temp. [4]	100 °C	70 °C	100 °C [5]	
Min. operating temp.	*Flange socket or fixed cable:* –40 °C *Moving cable:* –10 °C			
Protection EN 60529	IP 67 at housing, IP 64 at shaft end (IP 66 available on request)			
Weight	Approx. 0.3 kg			

Bold: These preferred versions are available on short notice

* Please select when ordering

1) Restricted tolerances: Signal amplitude 0.8 to 1.2 V_{PP}

2) Signal periods; generated through integrated 2-fold interpolation (TTL x 2)

3) Also see *Mechanical Design and Installation*

4) For the correlation between the operating temperature and the shaft speed or supply voltage, see *General Mechanical Information*

5) 80 °C for ROD 486 with 4096 or 5000 lines



	Absolute Singleturn ROC 425 Functional Safety	ROC 413			RIC 418
Absolute position values*	**EnDat 2.2**	**EnDat 2.2**	**SSI**	**PROFIBUS DP**	**EnDat 2.1**
Ordering designation	EnDat 22	EnDat 01	SSI 39r1		EnDat 01
Positions per revolution	33 554 432 (25 bits)	8 192 (13 bits)		8 192 (13 bits)[3]	262 144 (18 bits)
Revolutions	–				
Code	Pure binary		Gray	Pure binary	
Elec. permissible speed Deviations[1]	≤ 12 000 min^{-1} for continuous position value	*512 lines:* ≤ 5 000/12 000 min^{-1} ± 1 LSB/± 100 LSB *2 048 lines:* ≤ 1 500/12 000 min^{-1} ± 1 LSB/± 50 LSB	12 000 min^{-1} ± 12 LSB	≤ 5 000/12 000 min^{-1} ± 1 LSB/± 100 LSB	≤ 4 000/15 000 min^{-1} ± 400 LSB/± 800 LSB
Calculation time t_{cal}	≤ 7 µs	≤ 9 µs	≤ 5 µs	–	≤ 8 µs
Incremental signals	None	∿ 1 V_{PP}[2]		None	∿ 1 V_{PP}
Line counts*	–	**512** 2 048	**512**	–	**16**
Cutoff frequency –3 dB	–	*512 lines:* ≥ 130 kHz; *2 048 lines:* ≥ 400 kHz		–	≥ 6 kHz
System accuracy	± 20"	*512 lines:* ± 60"; *2 048 lines:* ± 20"		± 60"	± 480"
Power supply*	**3.6 to 14 V**	**3.6 to 14 V**	5 V ± 5 % or **10 to 30 V**	**9 to 36 V**	**5 V** ± 5 %
Power consumption (maximum)	*3.6 V:* ≤ 600 NW *14 V:* ≤ 700 NW		*5 V:* ≤ 800 NW *10 V:* ≤ 650 NW *30 V:* ≤ 1 000 NW	*9 V:* ≤ 3.38 W *36 V:* ≤ 3.84 W	*5 V:* ≤ 950 NW
Current consumption (typical; without load)	*5 V:* 85 mA		*5 V:* 90 mA *24 V:* 24 mA	*24 V:* 125 mA	*5 V:* 125 mA
Electrical connection*	• **Flange socket** M12, radial • Cable 1 m, with M12 coupling	• **Flange socket** M23, axial or radial • Cable 1 m/5 m, with or without M23 coupling		**Three flange sockets**, M12 radial	• **Flange socket** M23, radial • Cable 1 m, with M23 coupling
Shaft	Solid shaft D = 6 mm				
Mech. permissible speed n	≤ 12 000 min^{-1}				
Starting torque	≤ 0.01 Nm (at 20 °C)				
Moment of inertia of rotor	≤ 2.7 · 10^{-6} kgm^2				
Shaft load	Axial 10 N / radial 20 N on shaft end (see also *Mechanical Design Types and Mounting)*				
Vibration 55 to 2 000 Hz **Shock** 6 ms/2 ms	≤ 300 m/s^2; *PROFIBUS-DP:* ≤ 100 m/s^2 (EN 60 068-2-6) ≤ 1 000 m/s^2/≤ 2 000 m/s^2 (EN 60 068-2-27)				
Max. operating temp.[4]	100 °C			70 °C	100 °C
Min. operating temp.	*Flange socket or fixed cable:* –40 °C *Moving cable:* –10 °C			–40 °C	*Flange socket or fixed cable:* –40 °C *Moving cable:* –10 °C
Protection EN 60 529	IP 67 at housing, IP 64 at shaft end (IP 66 available on request)				
Weight	Approx. 0.35 kg				

Bold: These preferred versions are available on short notice
* Please select when ordering
1) Velocity-dependent deviations between the absolute value and incremental signal

Functional Safety for ROC 425/ROQ 437 upon request

	Multiturn				
	ROQ 437 Functional Safety	**ROQ 425**			**RIQ 430**
	EnDat 2.2	**EnDat 2.2**	**SSI**	**PROFIBUS DP**	**EnDat 2.1**
	EnDat 22	EnDat 01	SSI 41r1		EnDat 01
	33554432 (25 bits)	8192 (13 bits)	8192 (13 bits)	8192 (13 bits)[3]	262144 (18 bits)
	4096			4096[3]	4096
	Pure binary		Gray	Pure binary	
	≤ 12000 min^{-1} for continuous position value	*512 lines:* ≤ 5000/10000 min^{-1} ± 1 LSB/± 100 LSB *2048 lines:* ≤ 1500/10000 min^{-1} ± 1 LSB/± 50 LSB	10000 min^{-1} ± 12 LSB	≤ 5000/10000 min^{-1} ± 1 LSB/± 100 LSB	≤ 4000/15000 min^{-1} ± 400 LSB/± 800 LSB
	≤ 7 µs	≤ 9 µs	≤ 5 µs	–	≤ 8 µs
	None	~ 1 V_{PP}[2]		None	~ 1 V_{PP}
	–	**512** 2048	**512**	–	**16**
	–	*512 lines:* ≥ 130 kHz; *2048 lines:* ≥ 400 kHz		–	≥ 6 kHz
	± 20“	*512 lines:* ± 60“; *2048 lines:* ± 20“			± 480“
	3.6 to 14 V	**3.6 to 14 V**	5 V ± 5 % or **10 to 30 V**	**9 to 36 V**	**5 V** ± 5 %
	3.6 V: ≤ 700 NW *14 V:* ≤ 800 NW		*5 V:* ≤ 950 NW *10 V:* ≤ 750 NW *30 V:* ≤ 1100 NW	*9 V:* ≤ 3.38 W *36 V:* ≤ 3.84 W	*5 V:* ≤ 1100 mW
	5 V: 105 mA		*5 V:* 120 mA *24 V:* 28 mA	*24 V:* 125 mA	*5 V:* 150 mA
	• **Flange socket** M12, radial • Cable 1 m, with M12 coupling	• **Flange socket** M23, axial or radial • Cable 1 m/5 m, with or without M23 coupling		**Three flange sockets**, M12 radial	• **Flange socket** M23, radial • Cable 1 m, with M23 coupling
	100 °C			70 °C	100 °C
	Flange socket or fixed cable: –40 °C *Moving cable:* –10 °C			–40 °C	*Flange socket or fixed cable:* –40 °C *Moving cable:* –10 °C

[2] Restricted tolerances: Signal amplitude 0.8 to 1.2 V_{PP}
[3] These functions are programmable
[4] For the correlation between the operating temperature and shaft speed or power supply, see *General Mechanical Information*

ROC/ROQ/ROD 400 and RIC/RIQ 400 Series

With Clamping Flange



- **Rotary encoders for separate shaft coupling**
- **Functional Safety for ROC 425/ROQ 437 upon request**

ROC/ROQ/ROD 4xx
RIC/RIQ 4xx

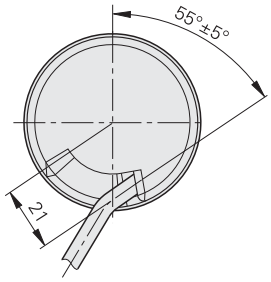

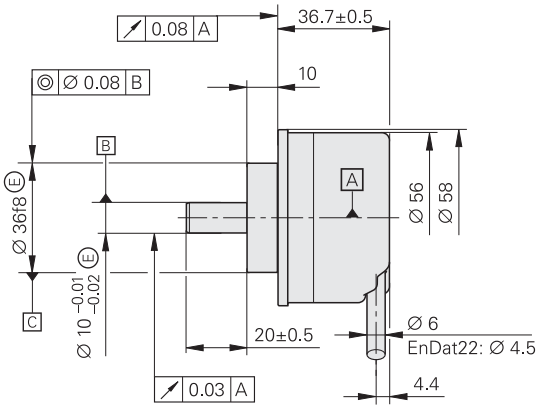

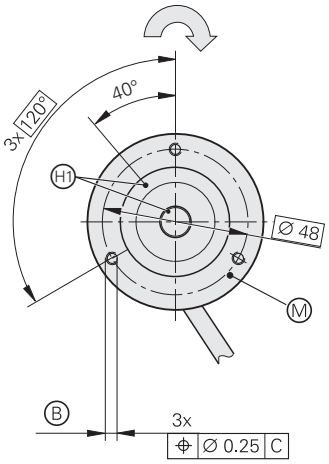

Connector coding
A = axial, **R** = radial

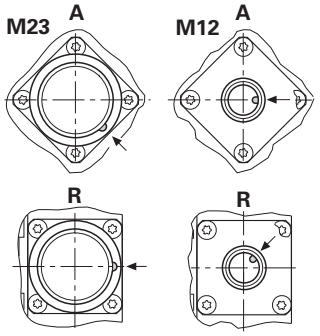

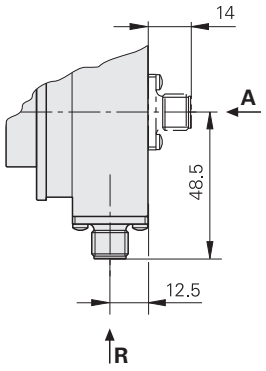

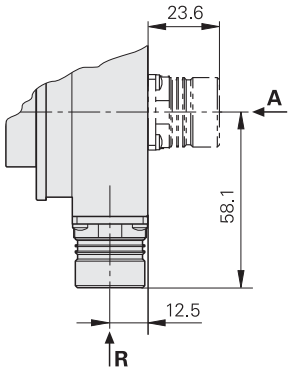

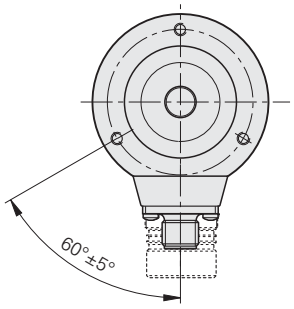

ROC 413/ROQ 425 with PROFIBUS DP

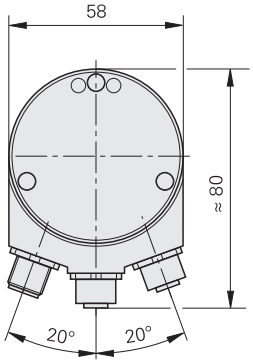

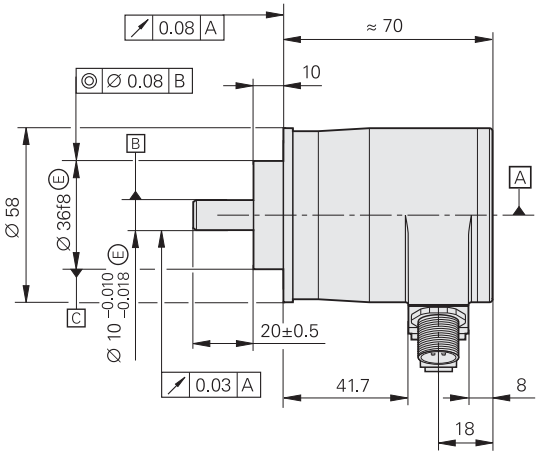

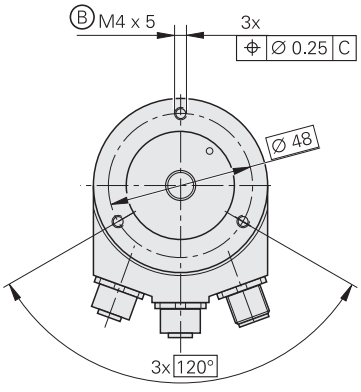

Dimensions in mm

Tolerancing ISO 8015
ISO 2768 - m H
< 6 mm: ±0.2 mm

Cable radial, also usable axially
A = Bearing
B = Threaded mounting hole M3x5 on ROD; M4x5 on ROC/ROQ/RIC/RIQ
M = Measuring point for operating temperature
H1 = ROD: Reference mark position on shaft and flange ± 15°
Direction of shaft rotation for output signals as per the interface description

	Incremental		
	ROD 420	**ROD 430**	**ROD 480**
Incremental signals	⊓⊔ TTL	⊓⊔ HTL	∿ 1 V_{PP} [1]
Line counts*	50 100 150 200 250 360 **500** 512 720		–
	1000 1024 1250 1500 1800 **2000 2048 2500 3600 4096 5000**		
Cutoff frequency –3 dB Scanning frequency Edge separation a	– ≤ 300 kHz ≥ 0.39 µs		≥ 180 kHz – –
System accuracy	1/20 of grating period		
Power supply **Current consumption** without load	5 V ± 10 % 120 mA	10 to 30 V 150 mA	5 V ± 10 % 120 mA
Electrical connection*	• **Flange socket** M23, radial and axial • **Cable 1 m/**5 m, with or **without coupling** M23		
Shaft	Solid shaft D = 10 mm		
Mech. permissible speed n	≤ 12000 min^{-1}		
Starting torque	≤ 0.01 Nm (at 20 °C)		
Moment of inertia of rotor	≤ 2.3 · 10^{-6} kgm^2		
Shaft load[2]	Axial 10 N/radial 20 N at shaft end		
Vibration 55 to 2000 Hz **Shock** 6 ms/2 ms	≤ 300 m/s^2 (EN 60068-2-6) ≤ 1000 m/s^2/≤ 2000 m/s^2 (EN 60068-2-27)		
Max. operating temp.[3]	100 °C[4]		
Min. operating temp.	*Flange socket or fixed cable:* –40 °C *Moving cable:* –10 °C		
Protection EN 60529	IP 67 at housing, IP 64 at shaft end (IP 66 available on request)		
Weight	Approx. 0.3 kg		

Bold: These preferred versions are available on short notice

***** Please select when ordering

1) Restricted tolerances: Signal amplitude 0.8 to 1.2 V_{PP}

2) Also see *Mechanical Design and Installation*

3) For the correlation between the operating temperature and the shaft speed or supply voltage, see *General Mechanical Information*

4) 80 °C for ROD 480 with 4096 or 5000 lines



	Absolute **Singleturn**				
	ROC 425 Functional Safety	**ROC 413**			**RIC 418**
Absolute position values*	**EnDat 2.2**	**EnDat 2.2**	**SSI**	**PROFIBUS DP**	**EnDat 2.1**
Ordering designation	EnDat 22	EnDat 01	SSI 39r1		EnDat 01
Positions per revolution	33 554 432 (25 bits)	8 192 (13 bits)		8 192 (13 bits)[3]	262 144 (18 bits)
Revolutions	–				
Code	Pure binary		Gray	Pure binary	
Elec. permissible speed Deviations[1]	≤ 12 000 min^{-1} for continuous position value	*512 lines:* ≤ 5 000/12 000 min^{-1} ± 1 LSB/± 100 LSB *2048 lines:* ≤ 1 500/12 000 min^{-1} ± 1 LSB/± 50 LSB	12 000 min^{-1} ± 12 LSB	≤ 5 000/12 000 min^{-1} ± 1 LSB/± 100 LSB	≤ 4 000/15 000 min^{-1} ± 400 LSB/± 800 LSB
Calculation time t_{cal}	≤ 7 µs	≤ 9 µs	≤ 5 µs	–	≤ 8 µs
Incremental signals	None	~ 1 V_{PP}[2]		None	~ 1 V_{PP}
Line counts*	–	**512** 2048	**512**	–	**16**
Cutoff frequency –3 dB	–	*512 lines:* ≥ 130 kHz; *2048 lines:* ≥ 400 kHz		–	≥ 6 kHz
System accuracy	± 20“	± 60“			± 480“
Power supply*	**3.6 to 14 V**	**3.6 to 14 V**	5 V ± 5 % or **10 to 30 V**	**9 to 36 V**	**5 V** ± 5 %
Power consumption (maximum)	*3.6 V:* ≤ 600 NW *14 V:* ≤ 700 NW		*5 V:* ≤ 800 NW *10 V:* ≤ 650 NW *30 V:* ≤ 1 000 NW	*9 V:* ≤ 3.38 W *36 V:* ≤ 3.84 W	*5 V:* ≤ 900 NW
Current consumption (typical; without load)	*5 V:* 85 mA		*5 V:* 90 mA *24 V:* 24 mA	*24 V:* 125 mA	*5 V:* 125 mA
Electrical connection*	• **Flange socket** M12, radial • Cable 1 m, with M12 coupling	• **Flange socket** M23, axial or radial • Cable 1 m/5 m, with or without M23 coupling		**Three flange sockets**, M12 radial	• **Flange socket** M23, radial • Cable 1 m, with M23 coupling
Shaft	Solid shaft D = 10 mm				
Mech. permissible speed n	≤ 12 000 min^{-1}				
Starting torque	≤ 0.01 Nm (at 20 °C)				
Moment of inertia of rotor	≤ 2.3 · 10^{-6} kgm^2				
Shaft load	Axial 10 N / radial 20 N on shaft end (see also *Mechanical Design Types and Mounting*)				
Vibration 55 to 2 000 Hz **Shock** 6 ms/2 ms	≤ 300 m/s^2; *PROFIBUS-DP:* ≤ 100 m/s^2 (EN 60 068-2-6) ≤ 1 000 m/s^2/≤ 2 000 m/s^2 (EN 60 068-2-27)				
Max. operating temp.[4]	100 °C			70 °C	100 °C
Min. operating temp.	*Flange socket or fixed cable:* –40 °C *Moving cable:* –10 °C			–40 °C	*Flange socket or fixed cable:* –40 °C *Moving cable:* –10 °C
Protection EN 60 529	IP 67 at housing, IP 64 at shaft inlet[4] (IP 66 available on request)				
Weight	Approx. 0.35 kg				

Bold: These preferred versions are available on short notice
* Please select when ordering
1) Velocity-dependent deviations between the absolute value and incremental signal

Functional Safety for ROC 425/ROQ 437 upon request

	Multiturn				
	ROQ 437 Functional Safety	**ROQ 425**			**RIQ 430**
	EnDat 2.2	**EnDat 2.2**	**SSI**	**PROFIBUS DP**	**EnDat 2.1**
	EnDat 22	EnDat 01	SSI 41r1		EnDat 01
	33554432 (25 bits)	8192 (13 bits)	8192 (13 bits)	8192 (13 bits)[3]	262144 (18 bits)
	4096			4096[3]	4096
	Pure binary		Gray	Pure binary	
	≤ 12000 min^{-1} for continuous position value	*512 lines:* ≤ 5000/10000 min^{-1} ± 1 LSB/± 100 LSB *2048 lines:* ≤ 1500/10000 min^{-1} ± 1 LSB/± 50 LSB	10000 min^{-1} ± 12 LSB	≤ 5000/10000 min^{-1} ± 1 LSB/± 100 LSB	≤ 4000/15000 min^{-1} ± 400 LSB/± 800 LSB
	≤ 7 µs	≤ 9 µs	≤ 5 µs	–	≤ 8 µs
	None	~ 1 V_{PP}[2]		None	~ 1 V_{PP}
	–	**512** 2048	**512**	–	**16**
	–	*512 lines:* ≥ 130 kHz; *2048 lines:* ≥ 400 kHz		–	≥ 6 kHz
	± 20“	± 60“			± 480“
	3.6 to 14 V	**3.6 to 14 V**	5 V ± 5 % or **10 to 30 V**	**9 to 36 V**	**5 V** ± 5 %
	3.6 V: ≤ 700 NW *14 V:* ≤ 800 NW		*5 V:* ≤ 950 NW *10 V:* ≤ 750 NW *30 V:* ≤ 1100 mW	*9 V:* ≤ 3.38 W *36 V:* ≤ 3.84 W	*5 V:* ≤ 1100 mW
	5 V: 105 mA		*5 V:* 120 mA *24 V:* 28 mA	*24 V:* 125 mA	*5 V:* 150 mA
	• **Flange socket** M12, radial • Cable 1 m, with M12 coupling	• **Flange socket** M23, axial or radial • Cable 1 m/5 m, with or without M23 coupling		**Three flange sockets**, M12, radial	• **Flange socket** M23, radial • Cable 1 m, with M23 coupling
	100 °C			70 °C	100 °C
	Flange socket or fixed cable: –40 °C *Moving cable:* –10 °C			–40 °C	*Flange socket or fixed cable:* –40 °C *Moving cable:* –10 °C

[2] Restricted tolerances: Signal amplitude 0.8 to 1.2 V_{PP}
[3] These functions are programmable
[4] For the correlation between the operating temperature and shaft speed or power supply, see *General Mechanical Information*

ROC, ROQ, ROD 1000 Series



- **Rotary encoders for separate shaft coupling**
- **Compact dimensions**
- **Synchro flange**
- **Functional Safety for ROC 1023/ROQ 1035 upon request**

ROC/ROQ

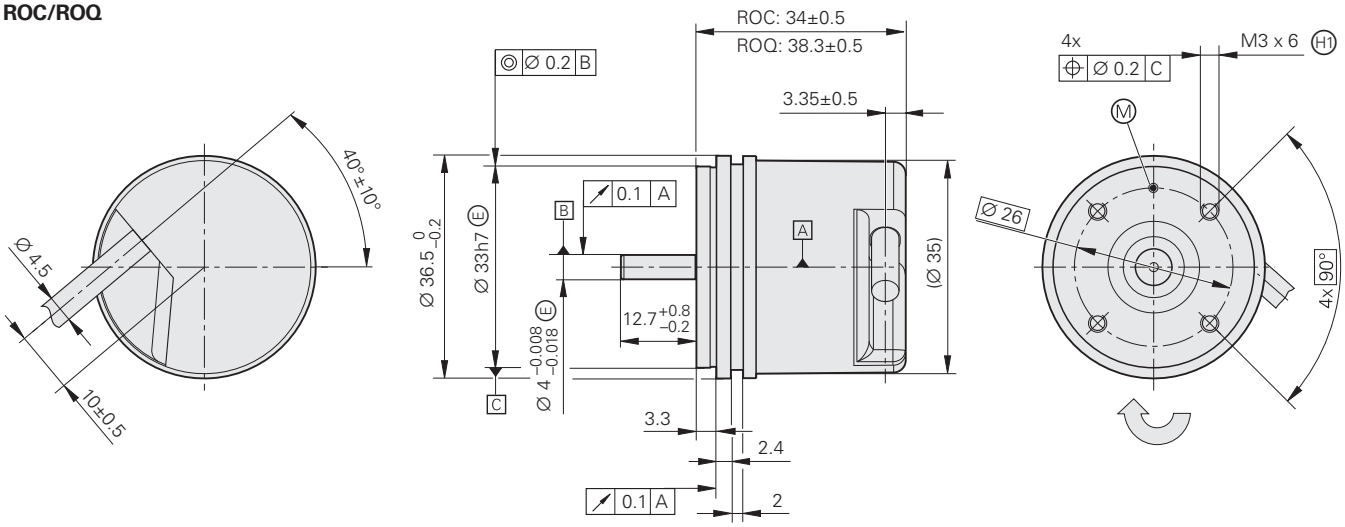

ROD

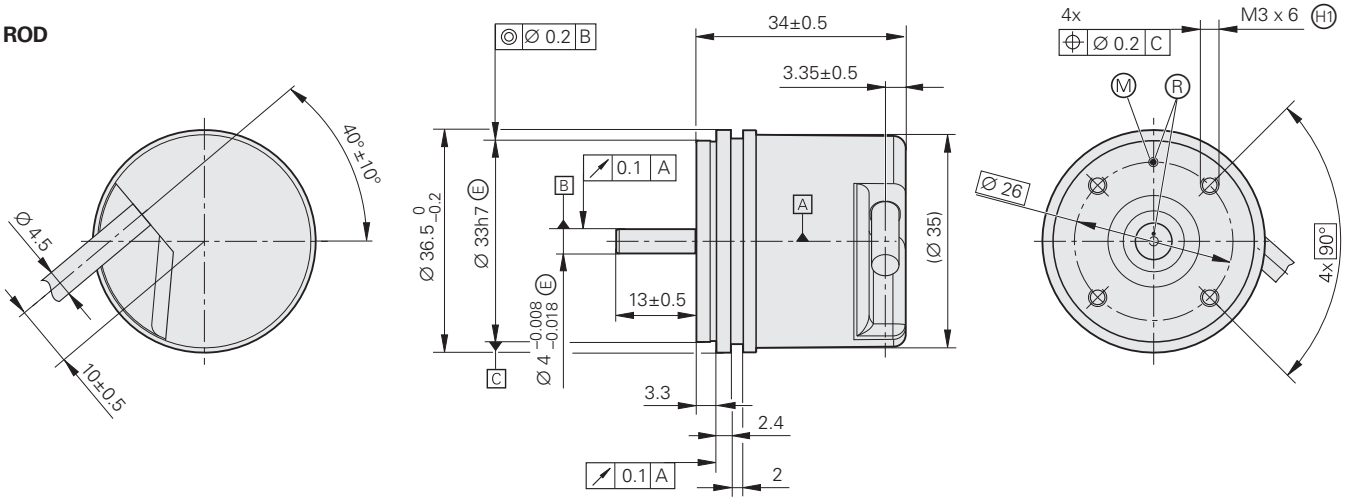

Dimensions in mm

Tolerancing ISO 8015
ISO 2768 - m H
< 6 mm: ±0.2 mm

Cable radial, also usable axially
A = Bearing
M = Measuring point for operating temperature
R = Reference mark position ± 20°
H1 = Threaded mounting hole
Direction of shaft rotation for output signals as per the interface description

	Incremental				
	ROD 1020	**ROD 1030**	**ROD 1080**	**ROD 1070**	
Incremental signals	⊓⊔TTL	⊓⊔ HTLs	∿ 1 V_{PP}[1)]	⊓⊔TTL	
Line counts*	100 200 **250** 360 400 **500** 720 900 **1000** **1024** 1250 1500 2000 **2048** **2500** **3600**			**1000** **2500** **3600**	
Integrated interpolation*	–			5-fold	10-fold
Cutoff frequency –3 dB Scanning frequency Edge separation a	– ≤ 300 kHz ≥ 0.39 µs	– ≤ 160 kHz ≥ 0.76 µs	≥ 180 kHz – –	– ≤ 100 kHz ≥ 0.47 µs	– ≤ 100 kHz ≥ 0.22 µs
System accuracy	1/20 of grating period				
Power supply **Current consumption** without load	5 V ± 10 % ≤ 120 mA	10 to 30 V ≤ 150 mA	5 V ± 10 % ≤ 120 mA	5 V ± 5 % ≤ 155 mA	
Electrical connection	**Cable 1 m**/5 m, with or **without coupling** M23			**Cable 5 m without** M23 **coupling**	
Shaft	Solid shaft D = 4 mm				
Mech. permissible speed n	≤ 12000 min^{-1}				
Starting torque	≤ 0.001 Nm (at 20 °C)				
Moment of inertia of rotor	≤ 0.5 · 10^{-6} kgm^2				
Shaft load	Axial: 5 N Radial: 10 N at shaft end				
Vibration 55 to 2000 Hz **Shock** 6 ms	≤ 100 m/s^2 (EN 60068-2-6) ≤ 1000 m/s^2 (EN 60068-2-27)				
Max. operating temp.[2)]	100 °C	70 °C	100 °C	70 °C	
Min. operating temp.	*For fixed cable:* –30 °C *Moving cable:* –10 °C				
Protection EN 60529	IP 64				
Weight	Approx. 0.09 kg				

Bold: These preferred versions are available on short notice

***** Please select when ordering

1) Restricted tolerances: Signal amplitude 0.8 to 1.2 V_{PP}

2) For the correlation between the operating temperature and the shaft speed or supply voltage, see *General Mechanical Information*

	**Absolute** **Singleturn** **ROC 1023** Functional Safety	**ROC 1013**
Absolute position values	**EnDat 2.2**	
Ordering designation	EnDat 22	EnDat 01
Positions per revolution	8388608 (23 bits)	8192 (13 bits)
Revolutions	–	
Code	Pure binary	
Elec. permissible speed Deviations[1]	12000 min^{-1} (for continuous position value)	4000 min^{-1}/12000 min^{-1} ± 1 LSB/± 16 LSB
Calculation time t_{cal}	≤ 7 µs	≤ 9 µs
Incremental signals	–	~ 1 V_{PP}[2]
Line count	–	512
Cutoff frequency –3 dB	–	≥ 190 kHz
System accuracy	± 60"	
Power supply	3.6 V to 14 V	
Power consumption (maximum)	*3.6 V:* ≤ 600 NW *14 V:* ≤ 700 NW	
Current consumption (typical; without load)	*5 V:* 85 mA	
Electrical connection	Cable 1 m, with M12 coupling	Cable 1 m, with M23 coupling
Shaft	Stub shaft ∅ 4 mm	
Mech. permissible speed n	12000 min^{-1}	
Starting torque	≤ 0.001 Nm (at 20 °C)	
Moment of inertia of rotor	Approx. 0.5 · 10^{-6} kgm^2	
Shaft load	Axial: 5 N Radial: 10 N at shaft end	
Vibration 55 to 2000 Hz **Shock** 6 ms	≤ 100 m/s^2 (EN 60068-2-6) ≤ 1000 m/s^2 (EN 60068-2-27)	
Max. operating temp.	100 °C	
Min. operating temp.	*For fixed cable:* –30 °C *Moving cable:* –10 °C	
Protection EN 60529	IP 64	
Weight	Approx. 0.09 kg	

[1] Velocity-dependent deviations between the absolute and incremental signals
[2] Restricted tolerances: Signal amplitude 0.80 to 1.2 V_{PP}
Functional Safety for ROC 1023/ROQ 1035 upon request

	Multiturn ROQ 1035	ROQ 1025
	EnDat 22	EnDat 01
	8388608 (23 bits)	8192 (13 bits)
	4096 (12 bits)	
	12000 min^{-1} (for continuous position value)	4000 min^{-1}/12000 min^{-1} ± 1 LSB/± 16 LSB
	≤ 7 µs	≤ 9 µs
	–	~ 1 V_{PP} [2)]
	–	512
	–	≥ 190 kHz
	3.6 V to 14 V	
	3.6 V: ≤ 700 NW *14 V:* ≤ 800 NW	
	5 V: 105 mA	
	Cable 1 m, with M12 coupling	Cable 1 m, with M23 coupling
	≤ 0.002 Nm (at 20 °C)	

Interfaces
Incremental Signals ∿ 1 V_{PP}

HEIDENHAIN encoders with ∿ 1 V_{PP} interface provide voltage signals that can be highly interpolated.

The sinusoidal **incremental signals** A and B are phase-shifted by 90° elec. and have an amplitude of typically 1 V_{PP}. The illustrated sequence of output signals—with B lagging A—applies for the direction of motion shown in the dimension drawing.

The **reference mark signal** R has a usable component G of approx. 0.5 V. Next to the reference mark, the output signal can be reduced by up to 1.7 V to a quiescent level H. This must not cause the subsequent electronics to overdrive. Even at the lowered signal level, signal peaks with the amplitude G can also appear.

The data on **signal amplitude** apply when the power supply given in the specifications is connected to the encoder. They refer to a differential measurement at the 120 ohm terminating resistor between the associated outputs. The signal amplitude decreases with increasing frequency. The **cutoff frequency** indicates the scanning frequency at which a certain percentage of the original signal amplitude is maintained:
- –3 dB ≙ 70 % of the signal amplitude
- –6 dB ≙ 50 % of the signal amplitude

The data in the signal description apply to motions at up to 20 % of the –3 dB cutoff frequency.

Interpolation/resolution/measuring step
The output signals of the 1-V_{PP} interface are usually interpolated in the subsequent electronics in order to attain sufficiently high resolutions. For **velocity control,** interpolation factors are commonly over 1000 in order to receive usable velocity information even at low speeds.

Measuring steps for **position measurement** are recommended in the specifications. For special applications, other resolutions are also possible.

Short-circuit stability
A temporary short circuit of one signal output to 0 V or U_P (except encoders with U_{Pmin} = 3.6 V) does not cause encoder failure, but it is not a permissible operating condition.

Short circuit at	20 °C	125 °C
One output	< 3 min	< 1 min
All outputs	< 20 s	< 5 s

Interface	Sinusoidal voltage signals ∿ **1 V_{PP}**
Incremental signals	**2 nearly sinusoidal signals A and B** Signal amplitude M: 0.6 to 1.2 V_{PP}; typically 1 V_{PP} Asymmetry |P – N|/2M: ≤ 0.065 Amplitude ratio M_A/M_B: 0.8 to 1.25 Phase angle |φ1 + φ2|/2: 90° ± 10° elec.
Reference-mark signal	**One or several signal peaks R** Usable component G: ≥ 0.2 V Quiescent value H: ≤ 1.7 V Switching threshold E, F: 0.04 to 0.68 V Zero crossovers K, L: 180° ± 90° elec.
Connecting cables	Shielded HEIDENHAIN cable PUR [4(2 x 0.14 mm²) + (4 x 0.5 mm²)]
Cable length	max. 150 m with 90 pF/m distributed capacitance
Propagation time	6 ns/m

These values can be used for dimensioning of the subsequent electronics. Any limited tolerances in the encoders are listed in the specifications. For encoders without integral bearing, reduced tolerances are recommended for initial operation (see the mounting instructions).

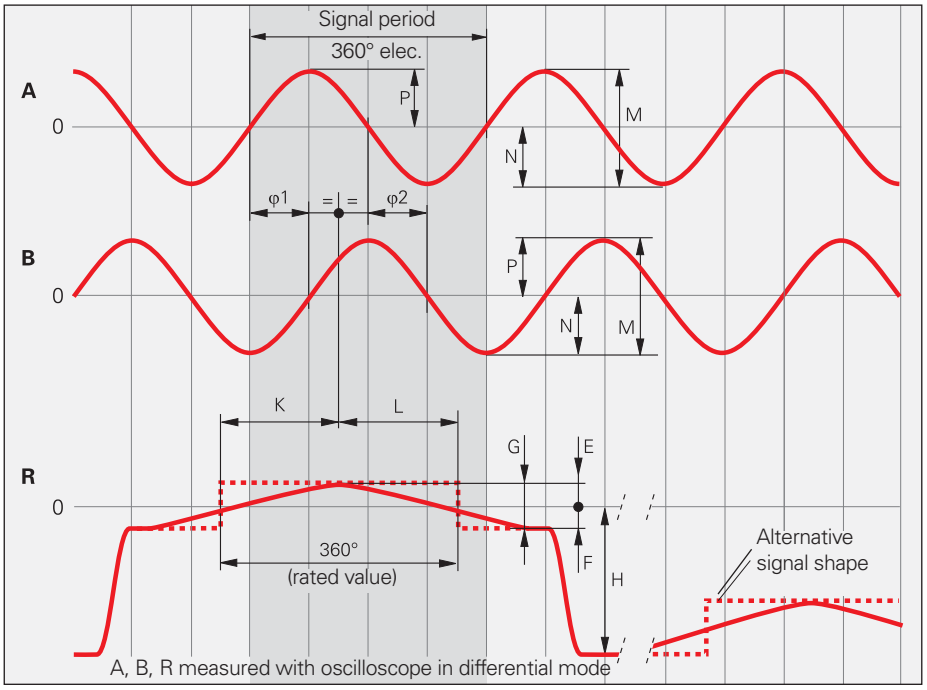

Cutoff frequency
Typical signal amplitude curve with respect to the scanning frequency

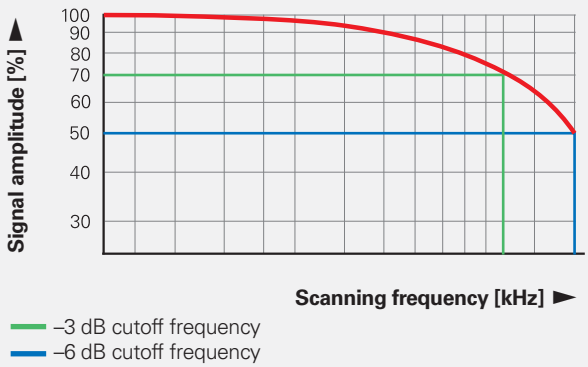

Input circuitry of the subsequent electronics

Dimensioning
Operational amplifier MC 34074
Z_0 = 120 Ω
R_1 = 10 kΩ and C_1 = 100 pF
R_2 = 34.8 kΩ and C_2 = 10 pF
U_B = ±15 V
U_1 approx. U_0

–3dB cutoff frequency of circuitry
Approx. 450 kHz
Approx. 50 kHz with C_1 = 1000 pF
and C_2 = 82 pF
The circuit variant for 50 kHz does reduce the bandwidth of the circuit, but in doing so it improves its noise immunity.

Circuit output signals
U_a = 3.48 V_{PP} typically
Gain 3.48

Monitoring of the incremental signals
The following thresholds are recommended for monitoring of the signal level M:
Lower threshold: 0.30 V_{PP}
Upper threshold: 1.35 V_{PP}

Incremental signals
Reference-mark signal

R_a < 100 Ω, typically 24 Ω
C_a < 50 pF
ΣI_a < 1 mA
U_0 = 2.5 V ± 0.5 V (relative to 0 V of the power supply)

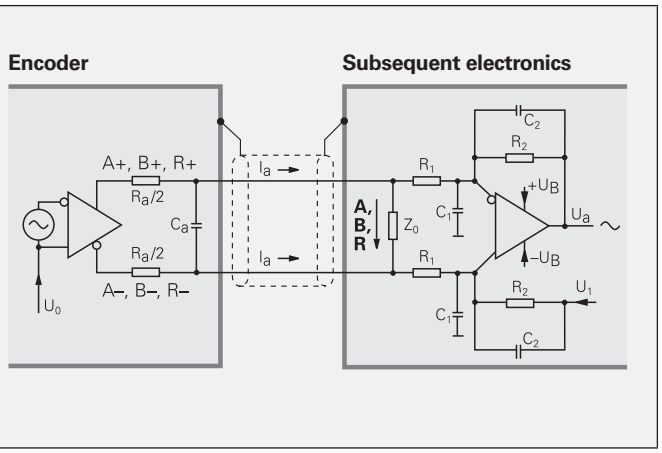

Pin layout

12-pin M23 **coupling**

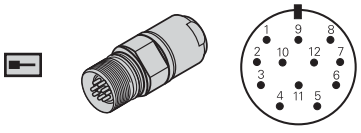

12-pin M23 **connector**

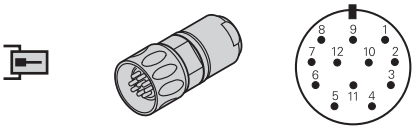

15-pin D-sub connector
for IK 215

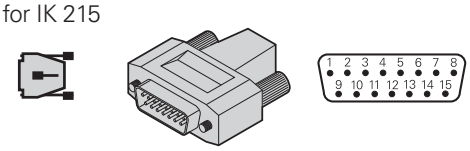

	Power supply				Incremental signals						Other signals		
	12	**2**	**10**	**11**	**5**	**6**	**8**	**1**	**3**	**4**	**9**	**7**	**/**
	4	**12**	**2**	**10**	**1**	**9**	**3**	**11**	**14**	**7**	**5/6/8/15**	**13**	**/**
	U_P	**Sensor** U_P	**0 V**	**Sensor** 0 V	**A+**	**A–**	**B+**	**B–**	**R+**	**R–**	**Vacant**	**Vacant**	**Vacant**
	Brown/ Green	Blue	White/ Green	White	Brown	Green	Gray	Pink	Red	Black	/	Violet	Yellow

Shield on housing; **U_P** = Power supply voltage
Sensor: The sensor line is connected in the encoder with the corresponding power line

Interfaces
Incremental Signals ⊓⊔ TTL

HEIDENHAIN encoders with ⊓⊔ TTL interface incorporate electronics that digitize sinusoidal scanning signals with or without interpolation.

The **incremental signals** are transmitted as the square-wave pulse trains U_{a1} and U_{a2}, phase-shifted by 90° elec. The **reference mark signal** consists of one or more reference pulses U_{a0}, which are gated with the incremental signals. In addition, the integrated electronics produce their **inverted signals** $\overline{U_{a1}}$, $\overline{U_{a2}}$ and $\overline{U_{a0}}$ for noise-proof transmission. The illustrated sequence of output signals—with U_{a2} lagging U_{a1}—applies to the direction of motion shown in the dimension drawing.

The **fault-detection signal** $\overline{U_{aS}}$ indicates fault conditions such as breakage of the power line or failure of the light source. It can be used for such purposes as machine shut-off during automated production.

The distance between two successive edges of the incremental signals U_{a1} and U_{a2} through 1-fold, 2-fold or 4-fold evaluation is one **measuring step.**

The subsequent electronics must be designed to detect each edge of the square-wave pulse. The minimum **edge separation a** listed in the *Specifications* applies to the illustrated input circuitry with a cable length of 1 m, and refers to a measurement at the output of the differential line receiver. Propagation-time differences in cables additionally reduce the edge separation by 0.2 ns per meter of cable length. To prevent counting errors, design the subsequent electronics to process as little as 90 % of the resulting edge separation.
The max. permissible **shaft speed** or **traversing velocity** must never be exceeded.

Interface	Square-wave signals ⊓⊔ **TTL**
Incremental signals	**2 TTL square-wave signals U_{a1}, U_{a2}** and their inverted signals **$\overline{U_{a1}}$, $\overline{U_{a2}}$**
Reference-mark signal Pulse width Delay time	**1 or more TTL square-wave pulses U_{a0}** and their inverted pulses **$\overline{U_{a0}}$** 90° elec. (other widths available on request); *LS 323:* ungated $\lvert t_d \rvert \leq 50$ ns
Fault-detection signal Pulse width	**1 TTL square-wave pulse $\overline{U_{aS}}$** Improper function: LOW (upon request: U_{a1}/U_{a2} high impedance) Proper function: HIGH $t_S \geq 20$ ms
Signal amplitude	Differential line driver as per EIA standard RS-422 $U_H \geq 2.5$ V at $-I_H = 20$ mA $U_L \leq 0.5$ V at $I_L = 20$ mA
Permissible load	$Z_0 \geq 100\ \Omega$ between associated outputs $\lvert I_L \rvert \leq 20$ mA max. load per output $C_{load} \leq 1000$ pF with respect to 0 V Outputs protected against short circuit to 0 V
Switching times (10 % to 90 %)	$t_+ / t_- \leq 30$ ns (typically 10 ns) with 1 m cable and recommended input circuitry
Connecting cables Cable length Propagation time	Shielded HEIDENHAIN cable PUR [4(2 × 0.14 mm²) + (4 × 0.5 mm²)] Max. 100 m ($\overline{U_{aS}}$ max. 50 m) at distributed capacitance 90 pF/m 6 ns/m

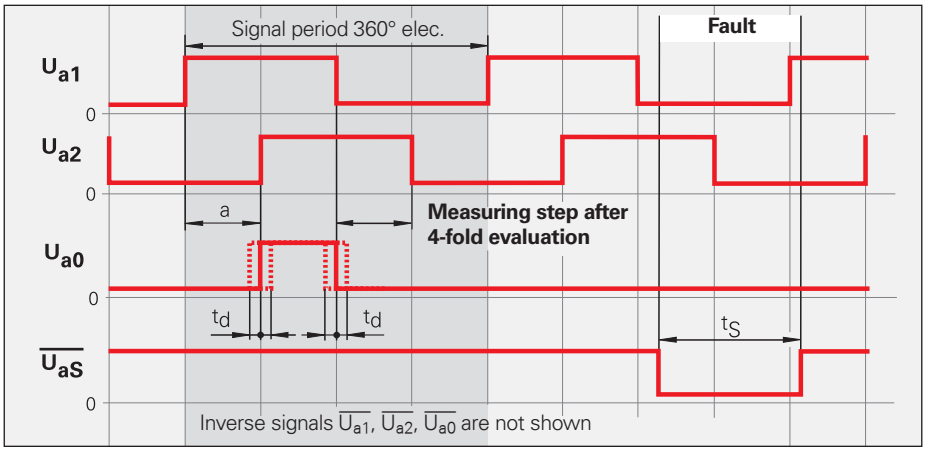

The permissible **cable length** for transmission of the TTL square-wave signals to the subsequent electronics depends on the edge separation a. It is at most 100 m, or 50 m for the fault detection signal. This requires, however, that the power supply (see *Specifications*) be ensured at the encoder. The sensor lines can be used to measure the voltage at the encoder and, if required, correct it with an automatic control system (remote sense power supply).

Permissible cable length
with respect to the edge separation

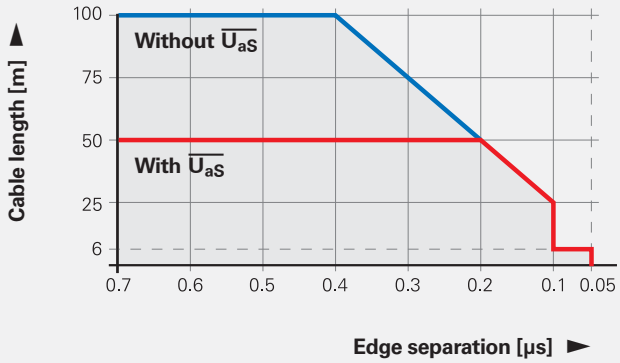

Input circuitry of the subsequent electronics

Dimensioning

IC_1 = Recommended differential line receiver
DS 26 C 32 AT
Only for a > 0.1 µs:
AM 26 LS 32
MC 3486
SN 75 ALS 193

R_1 = 4.7 kΩ
R_2 = 1.8 kΩ
Z_0 = 20 Ω
C_1 = 220 pF (serves to improve noise immunity)

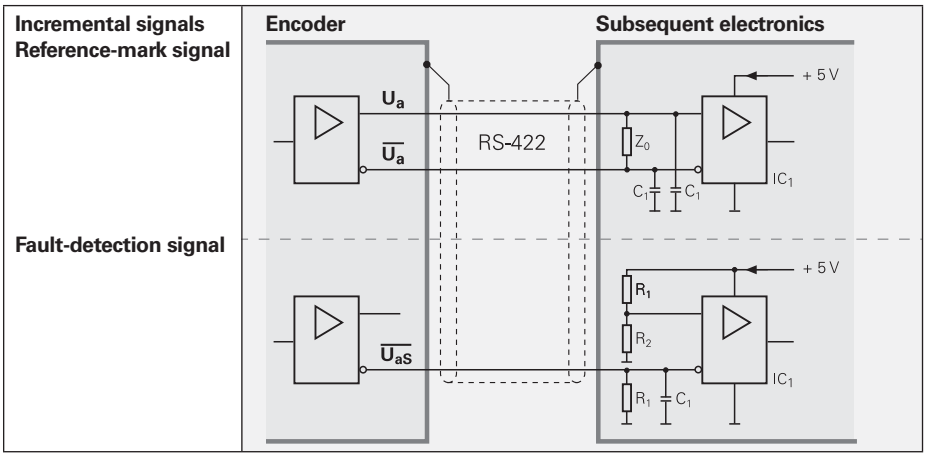

Pin layout

12-pin flange socket or M23 **coupling**

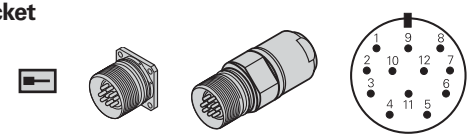

12-pin M23 **connector**

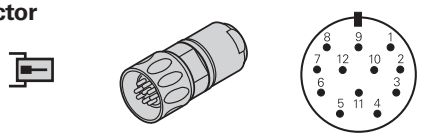

15-pin D-sub connector for IK 215

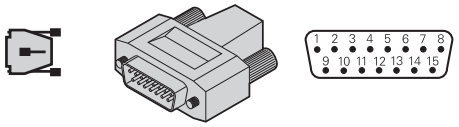

12-pin PCB connector

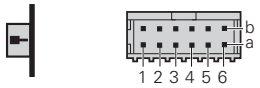

	Power supply				Incremental signals						Other signals		
	12	**2**	**10**	**11**	**5**	**6**	**8**	**1**	**3**	**4**	**7**	**/**	**9**
	4	**12**	**2**	**10**	**1**	**9**	**3**	**11**	**14**	**7**	**13**	**5/6/8**	**15**
	2a	**2b**	**1a**	**1b**	**6b**	**6a**	**5b**	**5a**	**4b**	**4a**	**3a**	**3b**	**/**
	U_P	**Sensor** U_P	**0 V**	**Sensor** 0 V	**U_{a1}**	**$\overline{U_{a1}}$**	**U_{a2}**	**$\overline{U_{a2}}$**	**U_{a0}**	**$\overline{U_{a0}}$**	**$\overline{U_{aS}}$**[1]	**Vacant**	**Vacant**[2]
	Brown/ Green	Blue	White/ Green	White	Brown	Green	Gray	Pink	Red	Black	Violet	–	Yellow

Shield on housing; **U_P** = Power supply voltage
Sensor: The sensor line is connected in the encoder with the corresponding power line
[1] **LS 323/ERO 14xx:** vacant [2] **Exposed linear encoders:** switchover TTL/11 μA_{PP} for PWT

Interfaces
Incremental Signals ⊓⊔ HTL

HEIDENHAIN encoders with ⊓⊔ HTL interface incorporate electronics that digitize sinusoidal scanning signals with or without interpolation.

The **incremental signals** are transmitted as the square-wave pulse trains U_{a1} and U_{a2}, phase-shifted by 90° elec. The **reference mark signal** consists of one or more reference pulses U_{a0}, which are gated with the incremental signals. In addition, the integrated electronics produce their **inverted signals** $\overline{U_{a1}}$, $\overline{U_{a2}}$ and $\overline{U_{a0}}$ for noise-proof transmission (does not apply to HTLs).
The illustrated sequence of output signals—with U_{a2} lagging U_{a1}—applies to the direction of motion shown in the dimension drawing.

The **fault-detection signal** $\overline{U_{aS}}$ indicates fault conditions such as failure of the light source. It can be used for such purposes as machine shut-off during automated production.

The distance between two successive edges of the incremental signals U_{a1} and U_{a2} through 1-fold, 2-fold or 4-fold evaluation is one **measuring step.**

The subsequent electronics must be designed to detect each edge of the square-wave pulse. The minimum **edge separation a** listed in the *Specifications* refers to a measurement at the output of the given differential input circuitry. To prevent counting errors, the subsequent electronics should be designed to process as little as 90 % of the edge separation a. The max. permissible **shaft speed** or **traversing velocity** must never be exceeded.

Interface	Square-wave signals **⊓⊔ HTL, ⊓⊔ HTLs**
Incremental signals	**2 HTL square-wave signals U_{a1}, U_{a2}** and their inverted signals **$\overline{U_{a1}}$, $\overline{U_{a2}}$** (*HTLs* without $\overline{U_{a1}}$, $\overline{U_{a2}}$)
Reference-mark signal Pulse width Delay time	**1 or more HTL square-wave pulses U_{a0}** and their inverted pulses **$\overline{U_{a0}}$** (*HTLs* without $\overline{U_{a0}}$) 90° elec. (other widths available on request) $\|t_d\| \leq 50$ ns
Fault-detection signal Pulse width	**1 HTL square-wave pulse $\overline{U_{aS}}$** Improper function: LOW Proper function: HIGH $t_S \geq 20$ ms
Signal levels	$U_H \geq 21$ V at $-I_H = 20$ mA $U_L \leq 2.8$ V with $I_L = 20$ mA With power supply of $U_P = 24$ V, without cable
Permissible load	$\|I_L\| \leq 100$ mA $C_{load} \leq 10$ nF Max. load per output, (except $\overline{U_{aS}}$) With respect to 0 V Outputs short-circuit proof for max. 1 minute after 0 V and U_P (except $\overline{U_{aS}}$)
Switching times (10 % to 90 %)	$t_+/t_- \leq 200$ ns (except $\overline{U_{aS}}$) with 1 m cable and recommended input circuitry
Connecting cables Cable length Propagation time	HEIDENHAIN cable with shielding PUR [4(2 × 0.14 mm²) + (4 × 0.5 mm²)] Max. 300 m (*HTLs* max. 100 m) at distributed capacitance 90 pF/m 6 ns/m

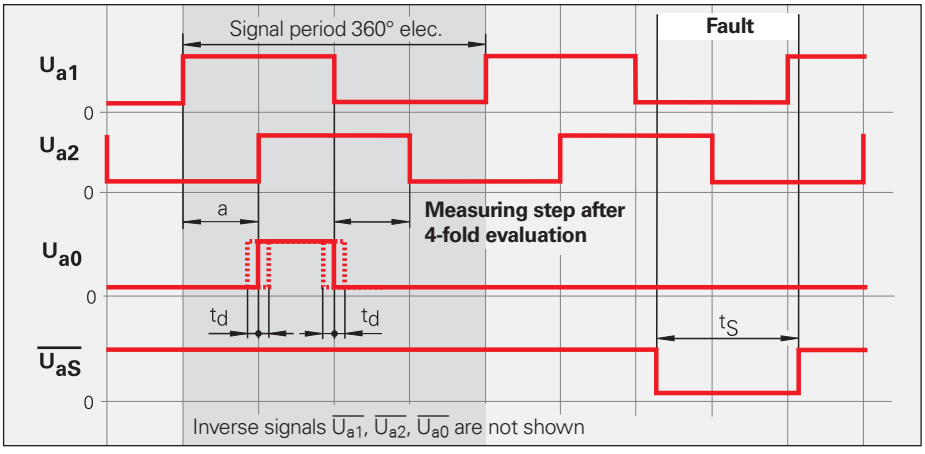

The permissible **cable length** for incremental encoders with HTL signals depends on the scanning frequency, the effective power supply, and the operating temperature of the encoder.

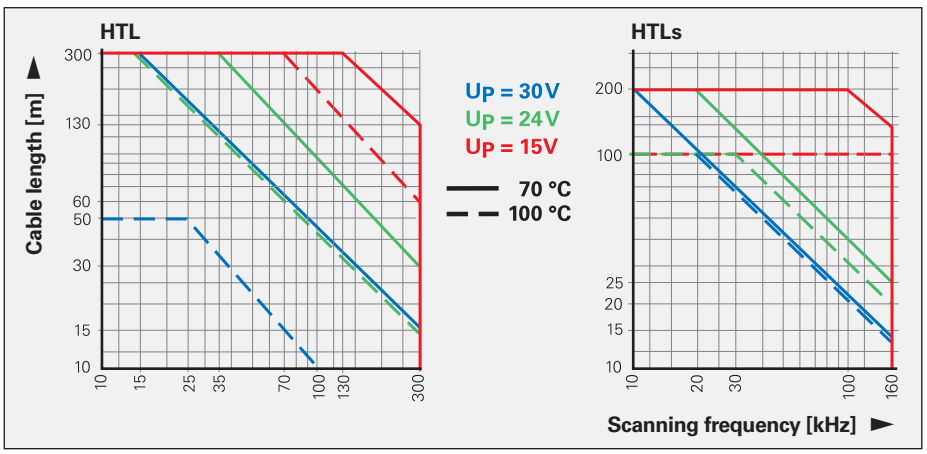

Current consumption
The current consumption for encoders with HTL output signals depends on the output frequency and the cable length to the subsequent electronics. The diagrams show typical curves for push-pull transmission with a 12-line HEIDENHAIN cable. The maximum current consumption can be 50 mA higher.

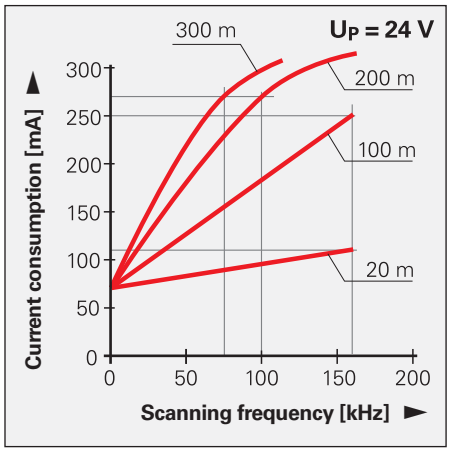

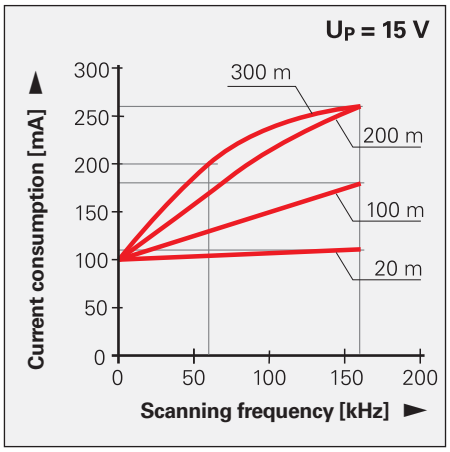

Input circuitry of the subsequent electronics

HTL

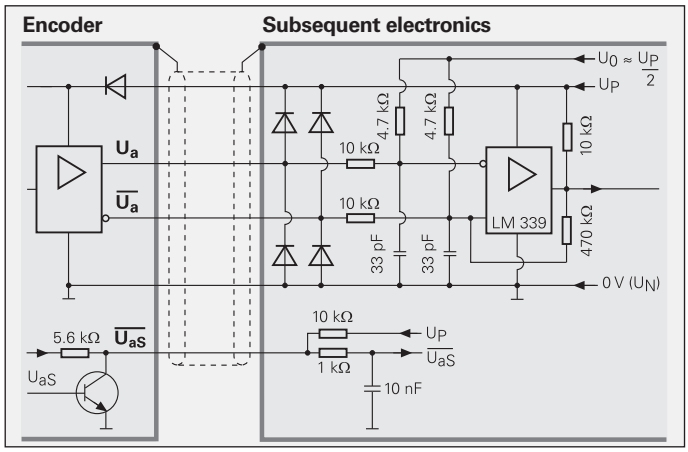

HTLs

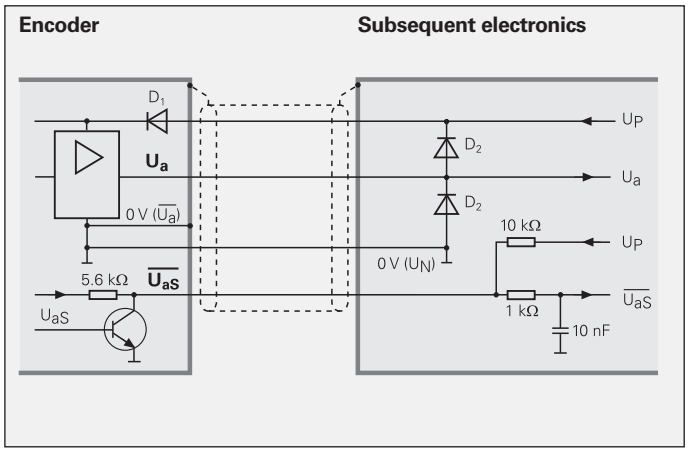

Pin layout

12-pin flange socket
or
M23 **coupling**

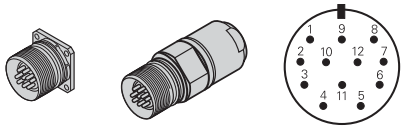

12-pin PCB connector

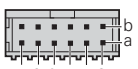

	Power supply				Incremental signals						Other signals		
	12	**2**	**10**	**11**	**5**	**6**	**8**	**1**	**3**	**4**	**7**	**/**	**9**
	2a	**2b**	**1a**	**1b**	**6b**	**6a**	**5b**	**5a**	**4b**	**4a**	**3a**	**3b**	**/**
HTL	**U_P**	**Sensor** U_P	0 V	**Sensor** 0 V	**U_{a1}**	**$\overline{U_{a1}}$**	**U_{a2}**	**$\overline{U_{a2}}$**	**U_{a0}**	**$\overline{U_{a0}}$**	**$\overline{U_{aS}}$**	**Vacant**	**Vacant**
HTLs						**0 V**		**0 V**		**0 V**			
	Brown/ Green	Blue	White/ Green	White	Brown	Green	Gray	Pink	Red	Black	Violet	/	Yellow

Shield on housing; **U_P** = Power supply voltage
Sensor: The sensor line is connected in the encoder with the corresponding power line

Interfaces
Absolute Position Values EnDat

The EnDat interface is a digital, **bidirectional** interface for encoders. It is capable of transmitting **position values** from both absolute and—with EnDat 2.2—incremental encoders, as well as reading and updating information stored in the encoder, or of saving new information. Thanks to the **serial transmission method,** only **four signal lines** are required. The data is transmitted in **synchronism** with the CLOCK signal from the subsequent electronics. The type of transmission (position values, parameters, diagnostics, etc.) is selected through mode commands that the subsequent electronics send to the encoder.

Clock frequency and cable length
Without propagation-delay compensation, the **clock frequency**—depending on the cable length—is variable between **100 kHz** and **2 MHz.**
Because large cable lengths and high clock frequencies increase the signal run time to the point that they can disturb the unambiguous assignment of data, the delay can be measured in a test run and then compensated. With this **propagation-delay compensation** in the subsequent electronics, clock frequencies **up to 16 MHz** at cable lengths up to a maximum of 100 m ($f_{CLK} \leq 8$ MHz) are possible. The maximum clock frequency is mainly determined by the cables and connecting elements used. To ensure proper function at clock frequencies above 2 MHz, use only original ready-made HEIDENHAIN cables.

Interface	**EnDat** serial bidirectional
Data transfer	Absolute position values, parameters and additional information
Data input	Differential line receiver according to EIA standard RS 485 for the signals CLOCK, $\overline{\text{CLOCK}}$, DATA and $\overline{\text{DATA}}$
Data output	Differential line driver according to EIA standard RS 485 for the signals DATA and $\overline{\text{DATA}}$
Code	Pure binary code
Position values	Ascending during traverse in direction of arrow (see dimensions of the encoders)
Incremental signals	~ 1 V_{PP} (see *Incremental Signals 1 V_{PP}*) depending on the unit
Connecting cables With Incremental Without signals	Shielded HEIDENHAIN cable PUR [(4 x 0.14 mm²) + 4(2 x 0.14 mm²) + (4 x 0.5 mm²)] PUR [(4 x 0.14 mm²) + (4 x 0.34 mm²)]
Cable length	Max. 150 m
Propagation time	Max. 10 ns; typically 6 ns/m

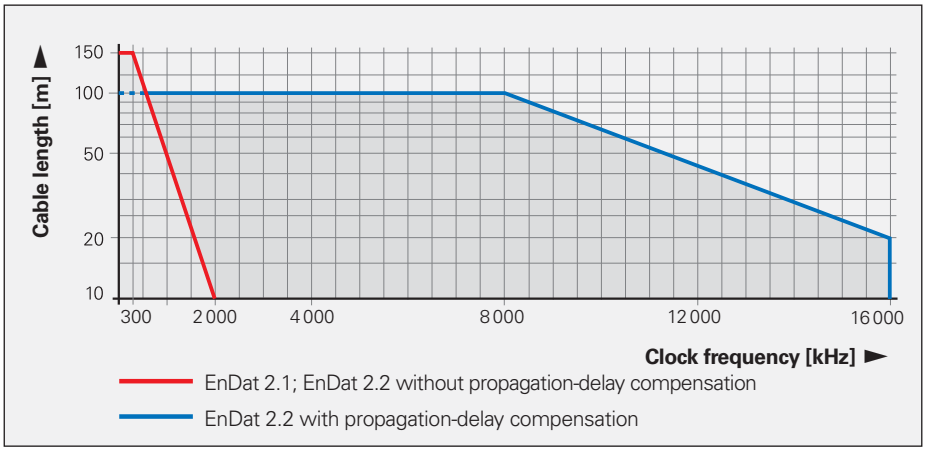

Input circuitry of the subsequent electronics

Dimensioning
IC_1 = RS 485 differential line receiver and driver

C_3 = 330 pF
Z_0 = 120 Ω

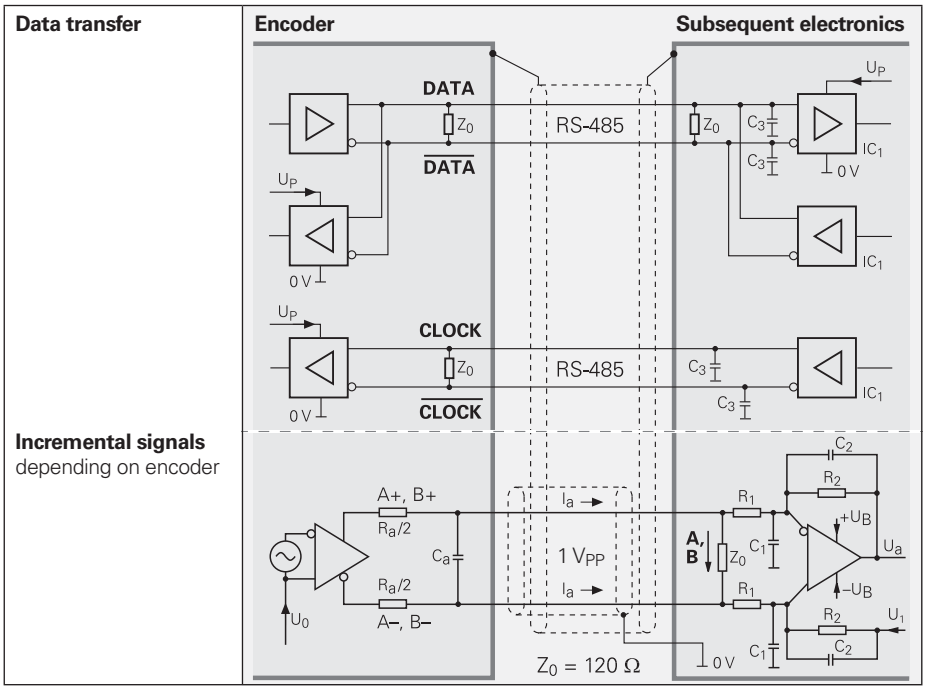

Benefits of the EnDat Interface

- **Automatic self-configuration:** All information required by the subsequent electronics is already stored in the encoder.
- **High system security** through alarms and messages for monitoring and diagnosis.
- **High transmission reliability** through cyclic redundancy checks.
- **Datum shift** for faster commissioning.

Other benefits of EnDat 2.2

- **A single interface** for all absolute and incremental encoders.
- **Additional information** (limit switch, temperature, acceleration)
- **Quality improvement:** Position value calculation in the encoder permits shorter sampling intervals (25 µs).
- **Online diagnostics** through valuation numbers that indicate the encoder's current functional reserves and make it easier to plan the machine servicing.
- **Safety system** for designing safety-oriented control systems consisting of safe controls and safe encoders based on the IEC 61 508 standards and DIN EN ISO 13 849-1 standard.

Advantages of purely serial transmission specifically for EnDat 2.2 encoders

- Cost optimization through **simple subsequent electronics** with EnDat receiver component and **simple connection technology:** Standard connecting element (M12; 8-pin), single-shielded standard cables and low wiring cost.
- **Minimized transmission times** through **high clock frequencies** up to 16 MHz. Position values available in the subsequent electronics after only approx. 10 µs.
- **Support for state-of-the-art machine designs** e.g. direct drive technology.

Ordering designation	Command set	Incremental signals	Clock frequency	Power supply
EnDat 01	EnDat 2.1 or EnDat 2.2	With	≤ 2 MHz	See specifications of the encoder
EnDat 21		Without		
EnDat 02	EnDat 2.2	With	≤ 2 MHz	Expanded range 3.6 to 5.25 V or 14 V
EnDat 22	EnDat 2.2	Without	≤ 16 MHz	

Specification of the EnDat interface (bold print indicates standard versions)

Versions

The extended EnDat 2.2 interface version is compatible in its communication, command set and time conditions with version 2.1, but also offers significant advantages. It makes it possible, for example, to transfer additional information with the position value without sending a separate request for it. The interface protocol was expanded and the time conditions (clock frequency, processing time, recovery time) were optimized.

Ordering designation
Indicated on the ID label and can be read out via parameter.

Command set
The command set is the sum of all available mode commands. (See "Selecting the transmission type"). The EnDat 2.2 command set includes EnDat 2.1 mode commands. When a mode command from the EnDat 2.2 command set is transmitted to EnDat-01 subsequent electronics, the encoder or the subsequent electronics may generate an error message.

Incremental signals
EnDat 2.1 and EnDat 2.2 are both available with or without incremental signals. EnDat 2.2 encoders feature a high internal resolution. Therefore, depending on the control technology being used, interrogation of the incremental signals is not necessary. To increase the resolution of EnDat 2.1 encoders, the incremental signals are interpolated and evaluated in the subsequent electronics.

Power supply
Encoders with ordering designations EnDat 02 and EnDat 22 have an extended power supply range.

Functions

The EnDat interface transmits absolute position values or additional physical quantities (only EnDat 2.2) in an unambiguous time sequence and serves to read from and write to the encoder's internal memory. Some functions are available only with EnDat 2.2 mode commands.

Position values can be transmitted with or without additional information. The additional information types are selectable via the Memory Range Select (MRS) code. Other functions such as *Read parameter* and *Write parameter* can also be called after the memory area and address have been selected. Through simultaneous transmission with the position value, additional information can also be requested of axes in the feedback loop, and functions executed with them.

Parameter reading and writing is possible both as a separate function and in connection with the position value. Parameters can be read or written after the memory area and address are selected.

Reset functions serve to reset the encoder in case of malfunction. Reset is possible instead of or during position value transmission.

Servicing diagnosis makes it possible to inspect the position value even at standstill. A test command has the encoder send the required test values.

You can find more information on the EnDat 2.2 on the Internet under www.endat.de or in the *Technical Information EnDat 2.2.*

Selecting the Transmission Type

Transmitted data are identified as either position values, position values with additional information, or parameters. The type of information to be transmitted is selected by mode commands. **Mode commands** define the content of the transmitted information. Every mode command consists of 3 bits. To ensure reliable transmission, every bit is transmitted redundantly (inverted or double). The EnDat 2.2 interface can also transfer parameter values in the additional information together with the position value. This makes the current position values constantly available for the control loop, even during a parameter request.

Mode commands

• Encoder send position value • Selection of memory area • Encoder receive parameter • Encoder send parameter • Encoder receive reset[1] • Encoder send test values • Encoder receive test command	EnDat 2.1
• Encoder send position value with additional information • Encoder transmit position value and receive selection of memory area [2] • Encoder send position value and receive parameter[2] • Encoder send position value and send parameter[2] • Encoder transmit position value and receive error reset[2] • Encoder send position value and receive test command[2] • Encoder receive communication command[3]	EnDat 2.2

[1] Same reaction as from switching the power supply off and on
[2] Selected additional information is also transmitted
[3] Reserved for encoders that do not support the safety system

Control cycles for transfer of position values

The transmission cycle begins with the first falling **clock edge.** The measured values are saved and the position value is calculated. After two clock pulses (2T), to **select the type of transmission,** the subsequent electronics transmit the mode command "Encoder transmit position value" (with/without additional information). The subsequent electronics continue to transmit clock pulses and observe the data line to detect the start bit. The **start bit** starts data transmission from the encoder to the subsequent electronics. Time t_{cal} is the smallest time duration after which the position value can be read by the encoder. The subsequent **error messages,** error 1 and error 2 (only with EnDat 2.2 commands), are group signals for all monitored functions and serve as failure monitors.

Beginning with the LSB, the encoder then transmits the absolute **position value** as a complete data word. Its length varies depending on which encoder is being used. The number of required clock pulses for transmission of a position value is saved in the parameters of the encoder manufacturer. The data transmission of the position value is completed with the **Cyclic Redundancy Check** (CRC).
In EnDat 2.2, this is followed by additional information 1 and 2, each also concluded with a CRC. With the end of the data word, the clock must be set to HIGH. After 10 to 30 µs or 1.25 to 3.75 µs (with EnDat 2.2 parameterizable recovery time t_m) the data line falls back to LOW. Then a **new data transmission** can begin by starting the clock.

The time absolute linear encoders need for calculating the position values t_{cal} differs depending on whether EnDat-2.1 or EnDat-2.2 mode commands are transmitted (see catalog: *Linear Encoders for Numerically Controlled Machine Tools – Specifications*). If the incremental signals are evaluated for axis control, then the EnDat 2.1 mode commands should be used. Only in this manner can an active error message be transmitted synchronously with the currently requested position value. EnDat 2.1 mode commands should not be used for pure serial position-value transfer for axis control.

		Without delay compensation	**With delay compensation**
Clock frequency	f_c	100 kHz ... 2 MHz	100 kHz ... 16 MHz
Calculation time for **Position value**	t_{cal}	See *Specifications*	
Parameter	t_{ac}	Max. 12 ms	
Recovery time	t_m	*EnDat 2.1:* 10 to 30 µs *EnDat 2.2:* 10 to 30 µs or 1.25 to 3.75 µs ($f_c \geq 1$ MHz) (parameterizable)	
	t_R	Max. 500 ns	
	t_{ST}	–	2 to 10 µs
Data delay time	t_D	(0.2 + 0.01 x cable length in m) µs	
Pulse width	t_{HI}	0.2 to 10 µs	Pulse width fluctuation HIGH to LOW max. 10 %
	t_{LO}	0.2 to 50 ms/30 µs (with LC)	

EnDat 2.2 – Transmission of Position Values

EnDat 2.2 can transmit position values with or without additional information.

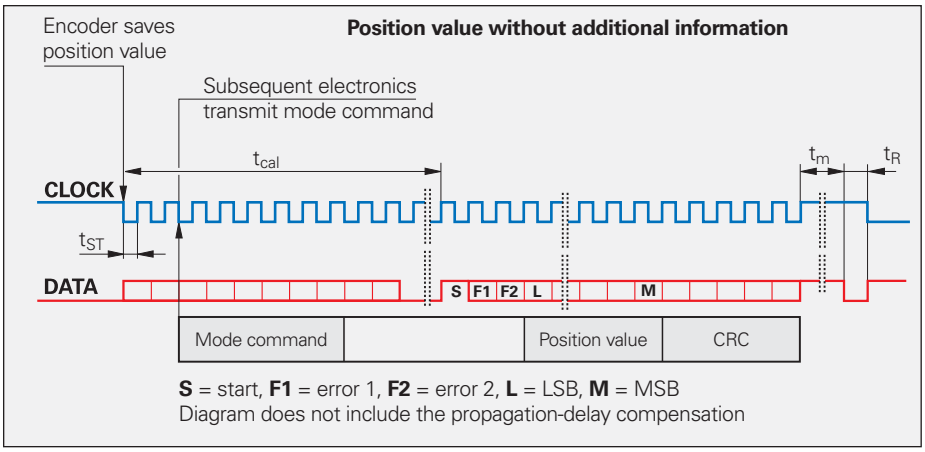

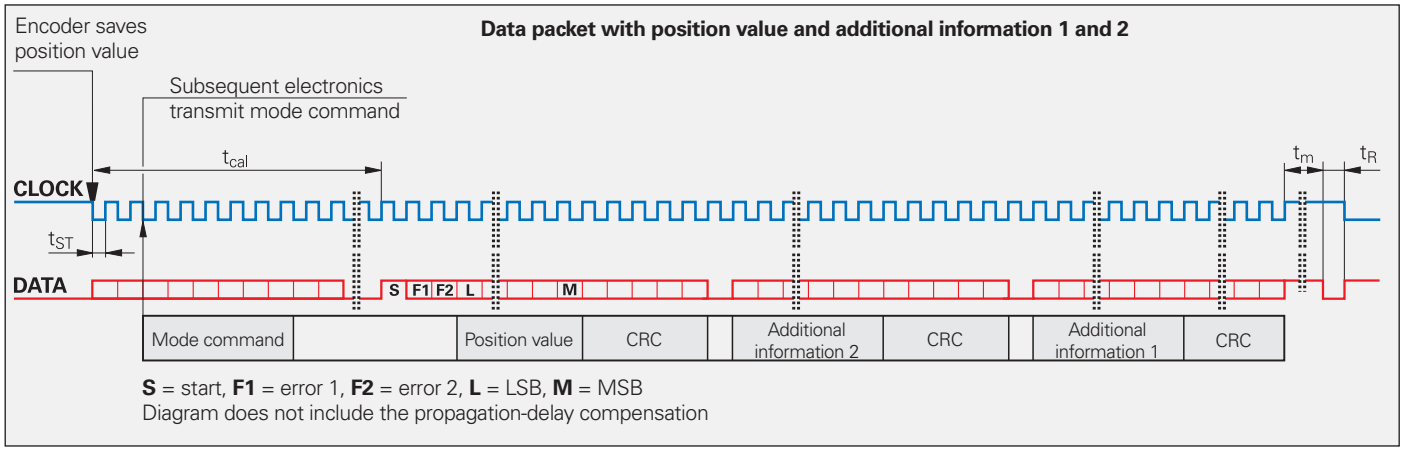

Additional information

With EnDat 2.2, one or two pieces of additional information can be appended to the position value. Each additional datum is 30 bits long with LOW as first bit, and ends with a CRC check. The additional information supported by the respective encoder is saved in the encoder parameters.
The content of the additional information is determined by the MRS code and is transmitted in the next sampling cycle for additional information. This information is then transmitted with every sample until a selection of a new memory area changes the content.

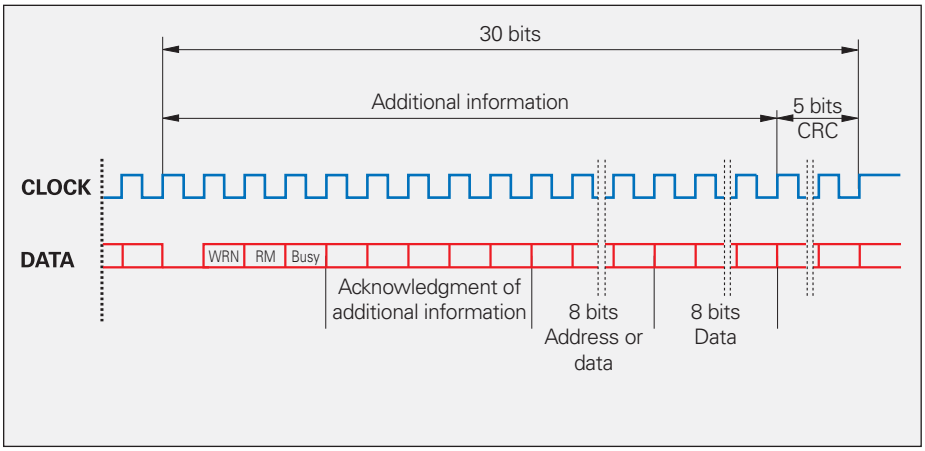

The additional information always begins with:	The additional information can contain the following data:	
Status data Warning – WRN Reference mark – RM Parameter request – busy **Acknowledgment** of additional information	**Additional information 1** Diagnosis (valuation numbers) Position value 2 Memory parameters MRS-code acknowledgment Test values Encoder temperature External temperature sensors Sensor data	**Additional information 2** Commutation Acceleration Limit position signals Operating status error sources

EnDat 2.1 – Transmission of Position Values

EnDat 2.1 can transmit position values with interrupted clock pulse (as in EnDat 2.2) or continuous clock pulse.

Interrupted clock

The interrupted clock is intended particularly for time-clocked systems such as closed control loops. At the end of the data word, the clock signal is set to HIGH level. After 10 to 30 µs (t_m) the data line falls back to LOW. Then a new data transmission can begin by starting the clock.

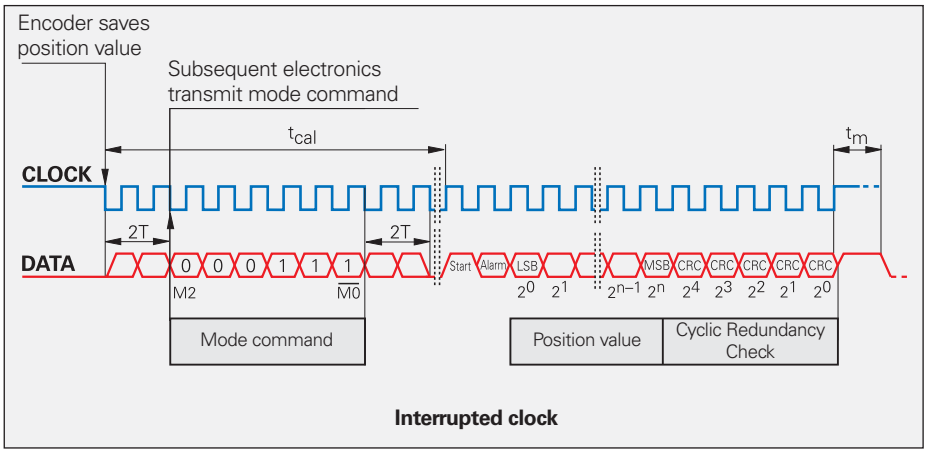

Continuous clock

For applications that require fast acquisition of the measured value, the EnDat interface can have the clock run continuously. Immediately after the last CRC bit has been sent, the data line is switched to HIGH for one clock cycle, and then to LOW. The new position value is saved with the very next falling edge of the clock and is output in synchronism with the clock signal immediately after the start bit and alarm bit. Because the mode command *Encoder transmit position value* is needed only before the first data transmission, the continuous-clock transfer mode reduces the length of the clock-pulse group by 10 periods per position value.

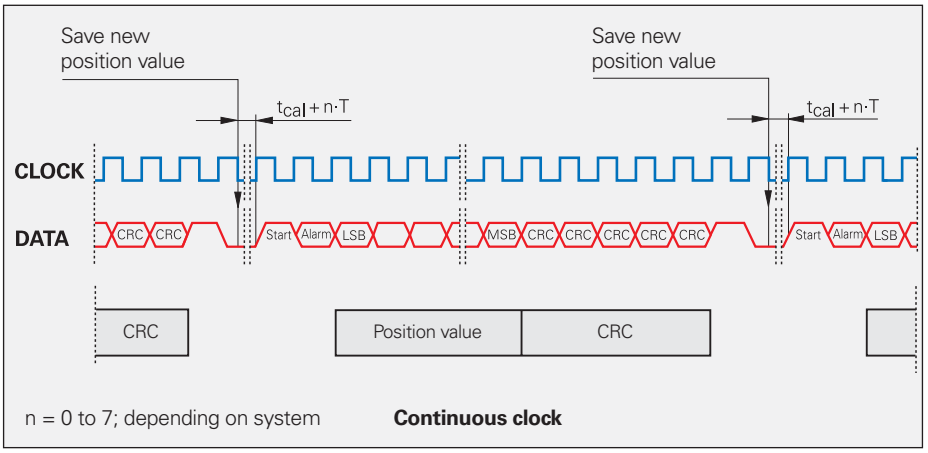

Synchronization of the serially transmitted code value with the incremental signal

Absolute encoders with EnDat interface can exactly synchronize serially transmitted absolute position values with incremental values. With the first falling edge (latch signal) of the CLOCK signal from the subsequent electronics, the scanning signals of the individual tracks in the encoder and counter are frozen, as are the A/D converters for subdividing the sinusoidal incremental signals in the subsequent electronics.

The code value transmitted over the serial interface unambiguously identifies one incremental signal period. The position value is absolute within one sinusoidal period of the incremental signal. The subdivided incremental signal can therefore be appended in the subsequent electronics to the serially transmitted code value.

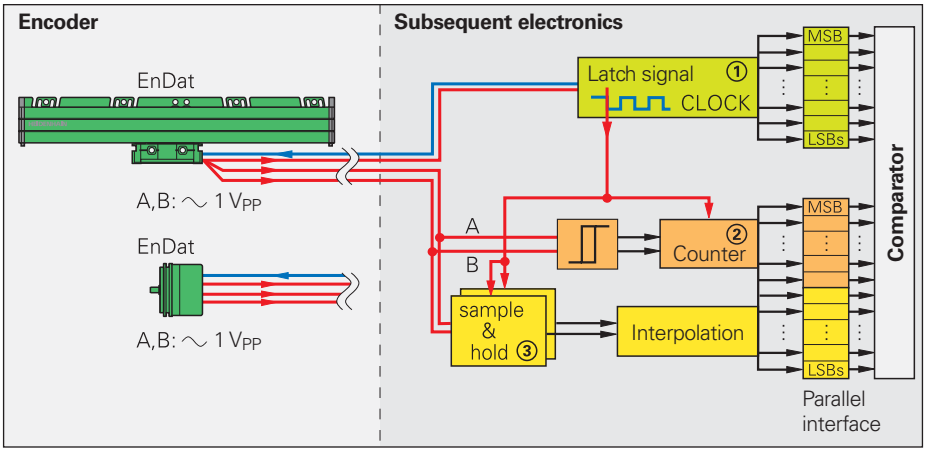

After switch-on and initial transmission of position values, two redundant position values are available in the subsequent electronics. Since encoders with EnDat interface guarantee a precise synchronization—regardless of cable length—of the serially transmitted code value with the incremental signals, the two values can be compared in the subsequent electronics. This monitoring is possible even at high shaft speeds thanks to the EnDat interface's short transmission times of less than 50 µs. This capability is a prerequisite for modern machine design and safety systems.

Parameters and Memory Areas

The encoder provides several memory areas for parameters. These can be read from by the subsequent electronics, and some can be written to by the encoder manufacturer, the OEM, or even the end user. Certain memory areas can be write-protected.

The parameters, which in most cases are set by the OEM, largely define the function of the encoder and the EnDat interface. When the encoder is exchanged, it is therefore essential that its parameter settings are correct. Attempts to configure machines without including OEM data can result in malfunctions. If there is any doubt as to the correct parameter settings, the OEM should be consulted.

Parameters of the encoder manufacturer
This write-protected memory area contains all **information specific to the encoder,** such as encoder type (linear/angular, singleturn/multiturn, etc.), signal periods, position values per revolution, transmission format of position values, direction of rotation, maximum speed, accuracy dependent on shaft speeds, warnings and alarms, part number and serial number. This information forms the basis for **automatic configuration.** A separate memory area contains the parameters typical for EnDat 2.2, such as status of additional information, temperature, acceleration, and support of diagnostic and error messages.

Parameters of the OEM
In this freely definable memory area, the OEM can store his information, e.g. the "electronic ID label" of the motor in which the encoder is integrated, indicating the motor model, maximum current rating, etc. The usabel size of the OEM memory depends on the encoder and must be read from the encoder via the EnDat parameter. The further processing of the subsequent electronics must be adjusted to the actual size of the OEM memory.

Operating parameters
This area is available for a **datum shift** and the configuration of diagnostics. It can be protected against overwriting.

Operating status
This memory area provides detailed alarms or warnings for diagnostic purposes. Here it is also possible to activate write protection for the OEM parameter and operating parameter memory areas, and to interrogate their status. Once activated, **the write protection** can be reversed only by HEIDENHAIN service personnel.

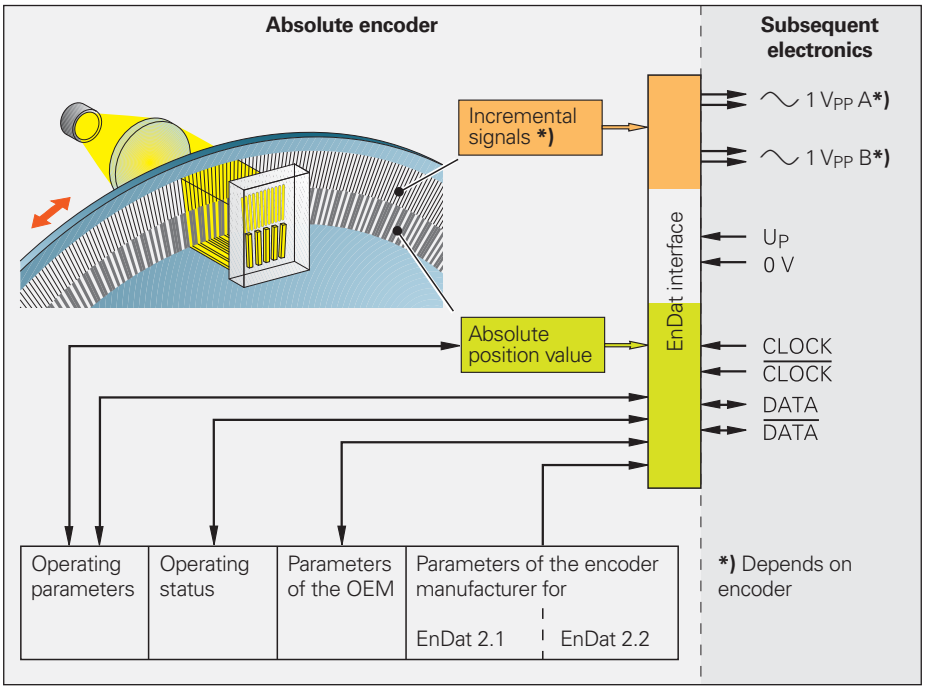

Monitoring and Diagnostic Functions

The EnDat interface enables comprehensive monitoring of the encoder without requiring an additional transmission line. The alarms and warnings supported by the respective encoder are saved in the "parameters of the encoder manufacturer" memory area.

Error message
An error message becomes active if a **malfunction of the encoder** might result in incorrect position values. The exact cause of the disturbance is saved in the encoder's "operating status" memory. It is also possible to interrogate over the additional information "operating status error sources." Here the EnDat interface transmits the error bits—error 1 and error 2 (only with EnDat 2.2 commands). These are group signals for all monitored functions and serve for failure monitoring. The two error messages are generated independently from each other.

Warning
This collective bit is transmitted in the status data of the additional information. It indicates that certain **tolerance limits of the encoder** have been reached or exceeded—such as shaft speed or the limit of light source intensity compensation through voltage regulation—without implying that the measured position values are incorrect. This function makes it possible to issue preventive warnings in order to minimize idle time.

Online diagnostics
Encoders with purely serial interfaces do not provide incremental signals for evaluation of encoder function. EnDat 2.2 encoders can therefore cyclically transmit so-called valuation numbers from the encoder. The valuation numbers provide the current state of the encoder and ascertain the encoder's "functional reserves." The identical scale for all HEIDENHAIN encoders allows uniform valuation. This makes it easier to plan machine use and servicing.

Cyclic Redundancy Check
To ensure **reliability of data transfer,** a cyclic redundancy check (CRC) is performed through the logical processing of the individual bit values of a data word. This 5 bit long CRC concludes every transmission. The CRC is decoded in the receiver electronics and compared with the data word. This largely eliminates errors caused by disturbances during data transfer.

Pin Layout

EnDat

17-pin M23 **coupling**

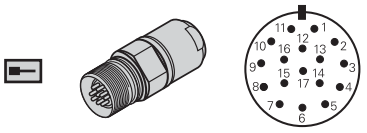

	Power supply					Incremental signals[1]				Absolute position values			
	7	**1**	**10**	**4**	**11**	**15**	**16**	**12**	**13**	**14**	**17**	**8**	**9**
	U_P	**Sensor** U_P	0 V	**Sensor** 0 V	**Internal shield**	**A+**	**A–**	**B+**	**B–**	**DATA**	**$\overline{\text{DATA}}$**	**CLOCK**	**$\overline{\text{CLOCK}}$**
	Brown/ Green	Blue	White/ Green	White	/	Green/ Black	Yellow/ Black	Blue/ Black	Red/ Black	Gray	Pink	Violet	Yellow

Cable shield connected to housing; **U_P** = power supply voltage
Sensor: The sensor line is connected in the encoder with the corresponding power line
Vacant pins or wires must not be used!
[1] Only with ordering designations EnDat 01 and EnDat 02

8-pin M12 **coupling**

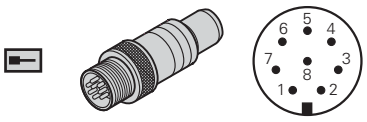

	Power supply				Absolute position values			
	8	**2**	**5**	**1**	**3**	**4**	**7**	**6**
	U_P	**U_P**[1]	**0 V**	**0 V**[1]	**DATA**	**$\overline{\text{DATA}}$**	**CLOCK**	**$\overline{\text{CLOCK}}$**
	Brown/Green	Blue	White/Green	White	Gray	Pink	Violet	Yellow

Cable shield connected to housing; **U_P** = power supply voltage
Vacant pins or wires must not be used!
[1] The parallel-configured power line is connected in the encoder with the corresponding power supply

15-pin D-sub connector, male
for IK 115/IK 215

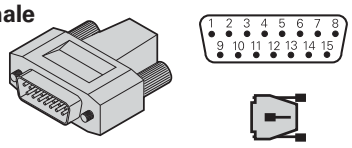

15-pin D-sub connector, female
for HEIDENHAIN controls and IK 220

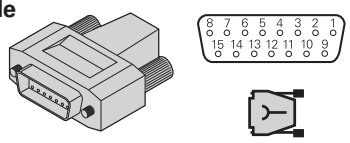

	Power supply					Incremental signals[1]				Absolute position values			
	4	**12**	**2**	**10**	**6**	**1**	**9**	**3**	**11**	**5**	**13**	**8**	**15**
	1	**9**	**2**	**11**	**13**	**3**	**4**	**6**	**7**	**5**	**8**	**14**	**15**
	U_P	**Sensor** U_P	**0 V**	**Sensor** 0 V	**Internal shield**	**A+**	**A–**	**B+**	**B–**	**DATA**	**$\overline{\text{DATA}}$**	**CLOCK**	**$\overline{\text{CLOCK}}$**
	Brown/ Green	Blue	White/ Green	White	/	Green/ Black	Yellow/ Black	Blue/ Black	Red/ Black	Gray	Pink	Violet	Yellow

Cable shield connected to housing; **U_P** = power supply voltage
Sensor: The sensor line is connected in the encoder with the corresponding power line
Vacant pins or wires must not be used!
[1] Only with ordering designations EnDat 01 and EnDat 02

Interface
PROFIBUS-DP Absolute Position Values

PROFIBUS DP
PROFIBUS is a nonproprietary, open field bus in accordance with the international EN 50 170 standard. The connecting of sensors through field bus systems minimizes the cost of cabling and reduces the number of lines between encoder and subsequent electronics.

Topology and bus assignment
The PROFIBUS-DP is designed as a linear structure. It permits transfer rates up to 12 Mbps. Both mono-master and multi master systems are possible. Each master can serve only its own slaves (polling). The slaves are polled cyclically by the master. Slaves are, for example, sensors such as absolute rotary encoders, linear encoders, or also control devices such as motor frequency inverters.

Physical characteristics
The electrical features of the PROFIBUS-DP comply with the RS-485 standard. The bus connection is a shielded, twisted two-wire cable with active bus terminations at each end.

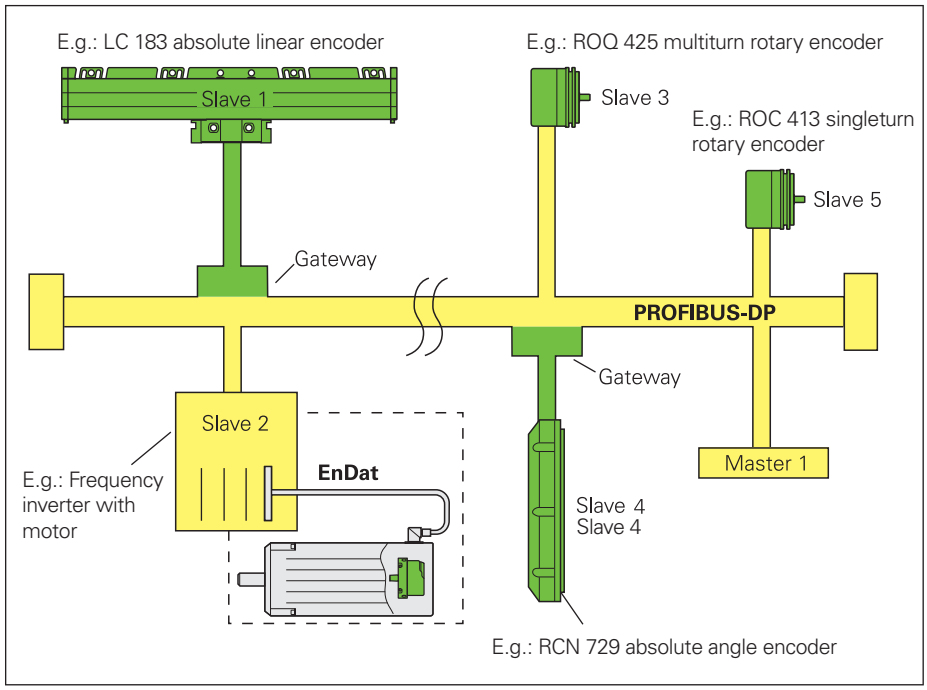

Bus structure of PROFIBUS-DP

Self-configuration
The characteristics of the HEIDENHAIN encoders required for system configuration are included as "electronic data sheets"—also called device identification records (GSD)—in the gateway. These device identification records (GSD) completely and clearly describe the characteristics of a unit in an exactly defined format. This makes it possible to integrate the encoders into the bus system in a simple and application-friendly way.

Configuration
PROFIBUS-DP devices can be configured and the parameters assigned to fit the requirements of the user. Once these settings are made in the configuration tool with the aid of the GSD file, they are saved in the master. It then configures the PROFIBUS devices every time the network starts up. This simplifies exchanging the devices: there is no need to edit or reenter the configuration data.

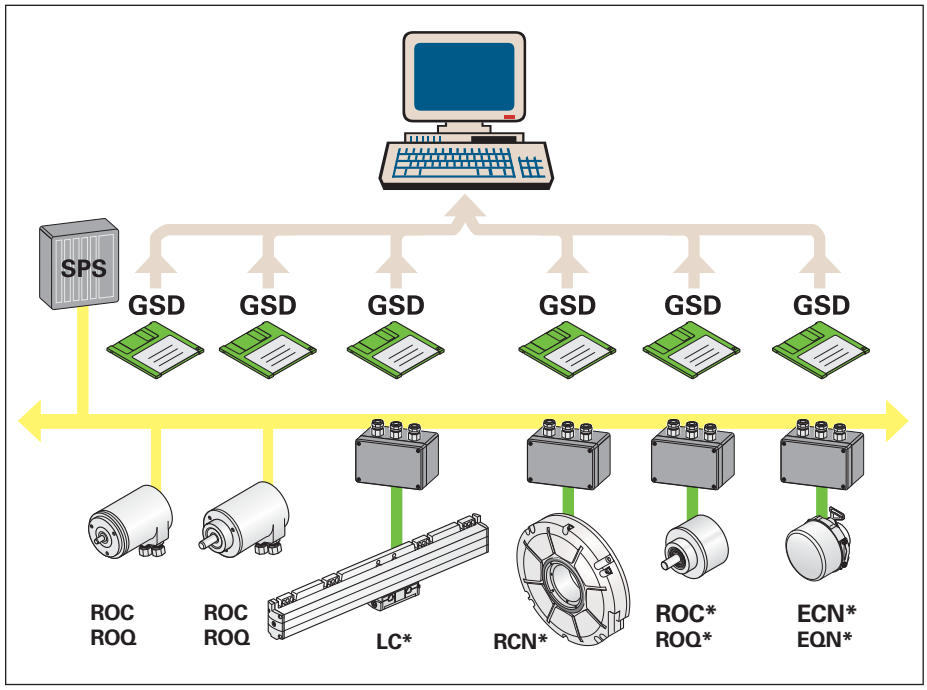

***** With EnDat interface

PROFIBUS-DP profile
The PNO (PROFIBUS user organization) has defined a standard, nonproprietary profile for the connection of absolute encoders to the PROFIBUS-DP. This ensures high flexibility and simple configuration on all systems that use this standardized profile.
You can request the profile for absolute encoders from the PNO in Karlsruhe, Germany, under the order number 3.062. There are two classes defined in the profile, whereby class 1 provides minimum support, and class 2 allows additional, in part optional functions.

Supported functions
Particularly important in decentralized field bus systems are the **diagnostic functions** (e.g. warnings and alarms), and the **electronic ID label** with information on the type of encoder, resolution, and measuring range. But also programming functions such as counting direction reversal, **preset/ zero shift** and **changing the resolution (scaling)** are possible. The **operating time** of the encoder can also be recorded.

Feature	Class	ECN 113[1] ECN 413[1] ROC 413	EQN 425[1] ROQ 425	ROC 415[1] ROC 417[1]	LC 483[1] LC 183[1]
Position value in pure binary code	1, 2	✓	✓	✓	✓
Data word length	1, 2	16	32	32	32
Scaling function					
Measuring steps/rev	2	✓	✓	✓[2]	–
Total resolution	2	✓	✓	–	–
Reversal of counting direction	1, 2	✓	✓	✓	–
Preset/Datum shift	2	✓	✓	✓	–
Diagnostic functions					
Warnings and alarms	2	✓	✓	✓	✓
Operating time recording	2	✓	✓	✓	✓
Profile version	2	✓	✓	✓	✓
Serial number	2	✓	✓	✓	✓

[1] Connectible with EnDat Interface over gateway to PROFIBUS-DP
[2] Scaling factor in binary steps

Encoders with EnDat interface for connection via gateway
All absolute encoders from HEIDENHAIN with **EnDat interface** are suitable for PROFIBUS-DP. The encoder is electrically connected through a **gateway.**
The complete interface electronics are integrated in the gateway, as well as a voltage converter for supplying EnDat encoders with 5 V ± 5 %. This offers a number of benefits:
- Simple connection of the field bus cable, since the terminals are easily accessible.
- Encoder dimensions remain small.
- No temperature restrictions for the encoder. All temperature-sensitive components are in the gateway.
- No bus interruption when an encoder is exchanged.

Besides the EnDat encoder connector, the gateway provides connections for the PROFIBUS and the power supply. In the gateway there are coding switches for addressing and selecting the terminating resistor.
Since the gateway is connected directly to the bus lines, the cable to the encoder is not a stub line, although it can be up to 150 meters long.



	Gateway
Power supply	10 to 30 V Max. 400 mA
Protection	IP 67
Operating temperature	–40 °C to 80 °C
Electrical connection	
EnDat	Flange socket 17-pin
PROFIBUS DP	Terminations, PG9 cable outlet
ID	325 771-01

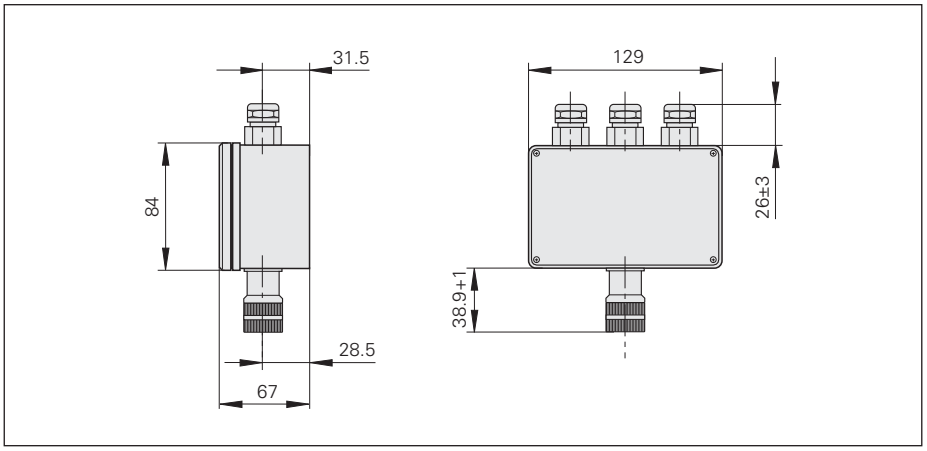

Encoders with PROFIBUS-DP
The absolute rotary encoders with **integrated PROFIBUS-DP interface** are connected directly to the PROFIBUS. LEDs on the rear of the encoder display the power supply and bus status **operating states.**

The coding switches for the addressing (0 to 99) and for selecting the terminating resistor are easily accessible under the bus housing. The terminating resistor is to be activated if the rotary encoder is the last participant on the PROFIBUS-DP and the external terminating resistor is not used.

Accessory:
Adapter M12 (male), 4-pin, B-coded
Fits 5-pin bus output, with PROFIBUS terminating resistor.
Required for last participant if the encoder's internal terminating resistor is not to be used.
ID 584217-01

Connection
PROFIBUS-DP and the power supply are connected via the M12 connecting elements. The necessary mating connectors are:
Bus input:
M12 connector (female), 5-pin, B-coded
Bus output:
M12 coupling (male), 5-pin, B-coded
Power supply:
M12 connector, 4-pin, A-coded

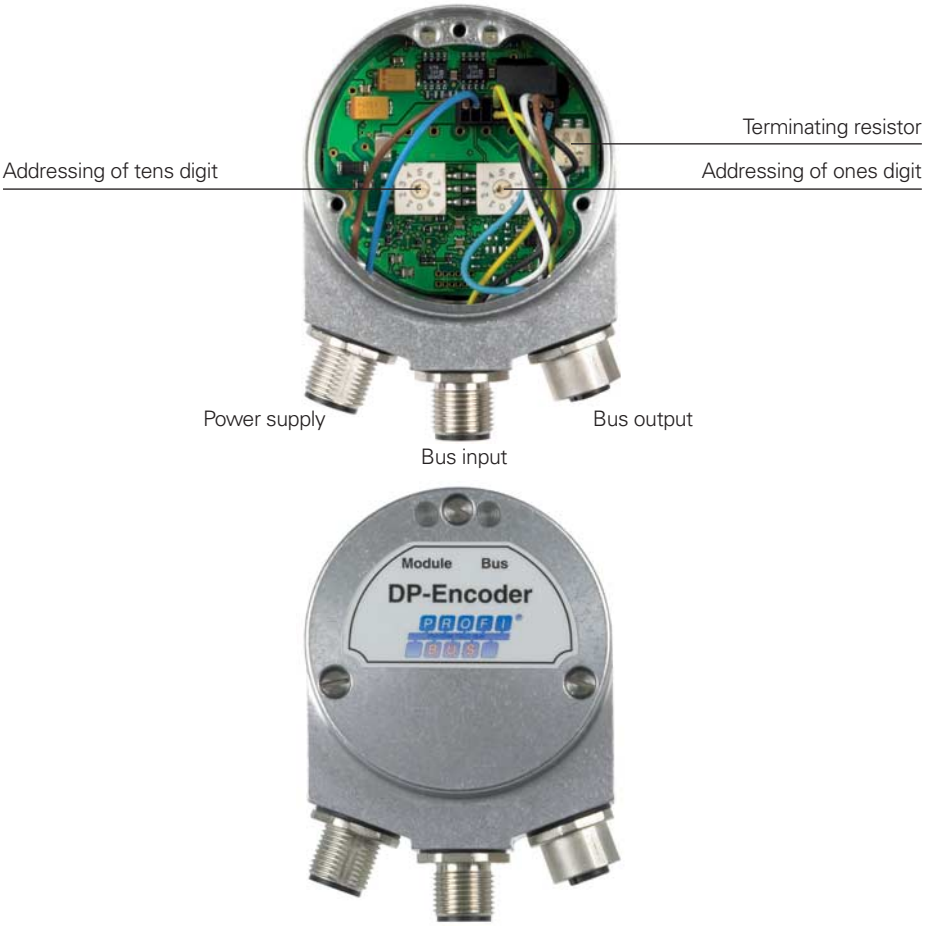

Pin layout

Mating connector: **Bus input** **5-pin connector (female)** M12 B-coded 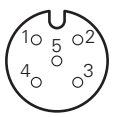					***Mating connector:*** **Bus output** **5-pin coupling (male)** M12 B-coded 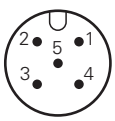	
	Power supply				Absolute position values	
	1	**3**	**5**	**Housing**	**2**	**4**
BUS in	**/**	**/**	**Shield**	**Shield**	**DATA (A)**	**DATA (B)**
BUS out	**U**[1)]	**0 V**[1)]	**Shield**	**Shield**	**DATA (A)**	**DATA (B)**

[1)] For supplying the external terminating resistor

Mating connector: **Power supply** **4-pin connector (female)** M12 A-coded 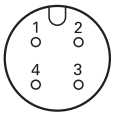				
	1	**3**	**2**	**4**
	U_P	**0 V**	**Vacant**	**Vacant**

Interfaces
SSI Absolute Position Values

The **absolute position value** beginning with the Most Significant Bit (MSB first) is transferred on the DATA lines in synchronism with a CLOCK signal transmitted by the control. The SSI standard data word length for singleturn absolute encoders is 13 bits, and for multiturn absolute encoders 25 bits. In addition to the absolute position values, sinusoidal **incremental signals** with 1-V_{PP} levels are transmitted. For signal description see *Incremental signals 1 V_{PP}*.

For the ECN/EQN 4xx and ROC/ROQ 4xx rotary encoders, the following **functions** can be activated via the programming inputs of the interfaces by applying the supply voltage U_P:

- **Direction of rotation**
  Continuous application of a HIGH level to pin 2 reverses the direction of rotation for ascending position values.

- **Zeroing**
  Applying a positive edge (t_{min} > 1 ms) to pin 5 sets the current position to zero.

Note: The programming inputs must always be terminated with a resistor (see input circuitry of the subsequent electronics).

Interface	**SSI** serial
Ordering designation	*Singleturn:* SSI 39r1, SSI 39n1 *Multiturn:* SSI 41r1
Data Transfer	Absolute position values
Data input	Differential line receiver according to EIA standard RS 485 for the CLOCK and $\overline{\text{CLOCK}}$ signals
Data output	Differential line driver according to EIA standard RS 485 for the signals DATA and $\overline{\text{DATA}}$
Code	Gray
Ascending position values	With clockwise rotation viewed from flange side (can be switched via interface)
Incremental signals	~ 1 V_{PP} (see *Incremental signals 1 V_{PP}*)
Programming inputs Inactive Active Switching time	Direction of rotation and zero reset (for ECN/EQN 4xx, ROC/ROQ 4xx) LOW < 0.25 x U_P HIGH > 0.6 x U_P t_{min} > 1 ms
Connecting cables Cable length Propagation time	HEIDENHAIN cable with shielding PUR [(4 x 0.14 mm²) + 4(2 x 0.14 mm²) + (4 x 0.5 mm²)] Max. 150 m with 90 pF/m distributed capacitance 6 ns/m

Control cycle for complete data format
When not transmitting, the clock and data lines are on high level. The current position value is stored on the first falling edge of the clock. The stored data is then clocked out on the first rising edge.
After transmission of a complete data word, the data line remains low for a period of time (t_2) until the encoder is ready for interrogation of a new value. Encoders with SSI 39r1 and SSI 41r1 interfaces additionally require a subsequent clock pause t_R. If another data-output request (CLOCK) is received within this time (t_2 or t_2+t_R), the same data will be output once again.
If the data output is interrupted (CLOCK = high for $t \geq t_2$), a new position value will be stored on the next falling edge of the clock. With the next rising clock edge the subsequent electronics adopts the data.

Data transfer

T = 1 to 10 µs
t_{cal} see *Specifications*
$t_1 \leq$ 0.4 µs (without cable)
t_2 = 17 to 20 µs
$t_R \geq$ 5 µs
n = Data word length
13 bits for ECN/ROC
25 bits for EQN/ROQ

$\overline{\text{CLOCK}}$ and $\overline{\text{DATA}}$ not shown

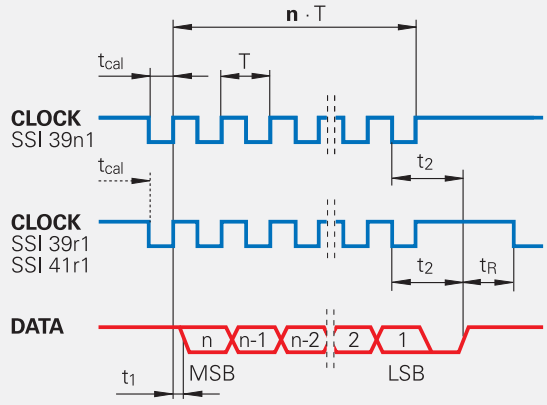

Permissible clock frequency with respect to cable lengths

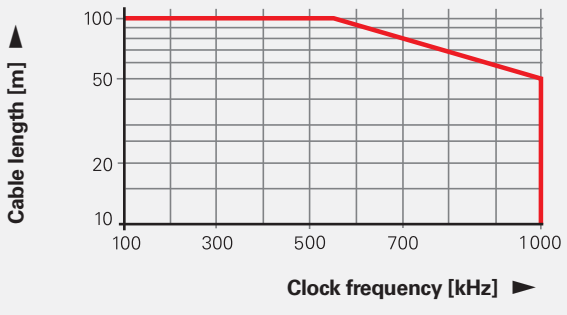

Input circuitry of the subsequent-electronics

Dimensioning

IC_1 = Differential line receiver and driver
Example: SN 65 LBC 176
LT 485

Z_0 = 120 Ω
C_3 = 330 pF (serves to improve noise immunity)

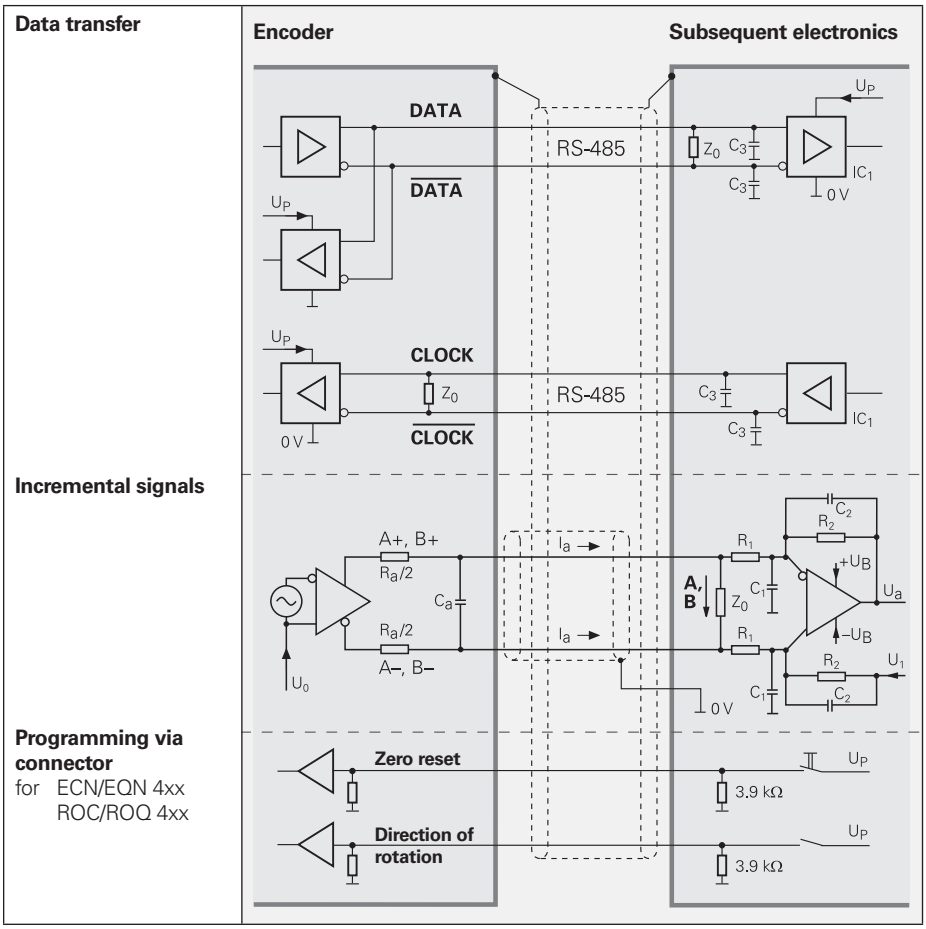

Pin layout

17-pin coupling M23

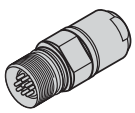

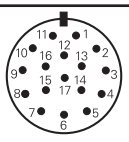



	Power supply					Incremental signals				Absolute position values				Other signals	
	7	**1**	**10**	**4**	**11**	**15**	**16**	**12**	**13**	**14**	**17**	**8**	**9**	**2**	**5**
	U_P	**Sensor** U_P	**0 V**	**Sensor** 0 V	**Internal shield**	**A+**	**A–**	**B+**	**B–**	**DATA**	**$\overline{\text{DATA}}$**	**CLOCK**	**$\overline{\text{CLOCK}}$**	**Direction of rotation**[1]	**Zero reset**[1]
	Brown/ Green	Blue	White/ Green	White	/	Green/ Black	Yellow/ Black	Blue/ Black	Red/ Black	Gray	Pink	Violet	Yellow	Black	Green

Shield on housing; **U_P** = Power supply voltage
Sensor: With a 5 V supply voltage, the sensor line is connected in the encoder with the corresponding power line.
[1] Vacant on ECN/EQN 10xx and ROC/ROQ 10xx

Connecting Elements and Cables
General Information

Connector (insulated): A connecting element with a coupling ring. Available with male or female contacts.

Symbols



M12

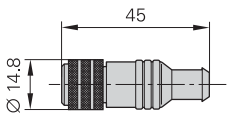

M23

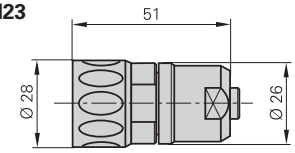

Coupling (insulated): Connecting element with external thread; available with male or female contacts.

Symbols



M12

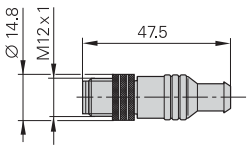

M23

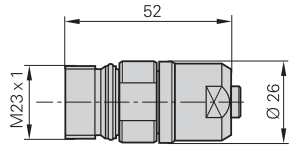

Mounted coupling with central fastening

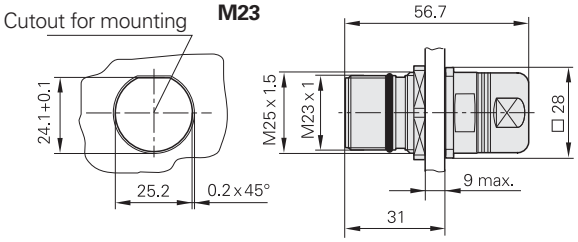

Mounted coupling with flange

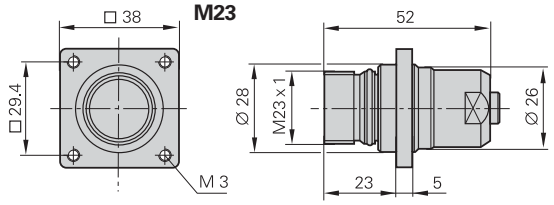

Flange socket: Permanently mounted on a housing, with external thread (like the coupling), and available with male or female contacts.

Symbols



M23

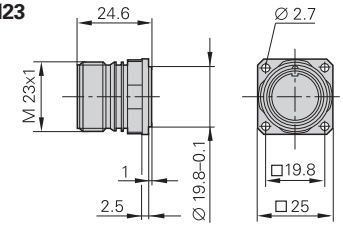

D-sub connector: For HEIDENHAIN controls, counters and IK absolute value cards.

Symbols



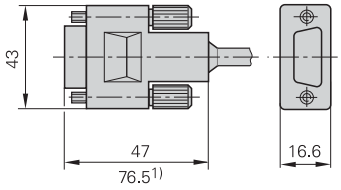

1) With integrated interpolation electronics

The pins on connectors are **numbered** in the direction opposite to those on couplings or flange sockets, regardless of whether the connecting elements are

male contacts or



female contacts.
contacts.



When engaged, the connections are **protected** to IP 67 (D-sub connector: IP 50; EN 60529). When not engaged, there is no protection.

Accessories for flange sockets and M23 mounted couplings

Bell seal
ID 266526-01

Threaded metal dust cap
ID 219926-01

Connecting Cables

		8-pin M12	12-pin M23	17-pin M23
		For EnDat without incremental signals	**For ~ 1 V_{PP} ⊓⊔ TTL**	**For EnDat** with incremental signals **SSI**
PUR connecting cables	**8-pin:** [(4 × 0.14 mm²) + (4 × 0.34 mm²)] **Ø 6 mm** **12-pin:** [4(2 × 0.14 mm²) + (4 × 0.5 mm²)] **Ø 8 mm** **17-pin:** [(4 × 0.14 mm²) + 4(2 × 0.14 mm²) + (4 × 0.5 mm²)] **Ø 8 mm**			
Complete with connector (female) and coupling (male)		368330-xx	298401-xx	323897-xx
Complete with connector (female) and connector (male)		–	298399-xx	–
Complete with connector (female) and D-sub connector (female) for IK 220		533627-xx	310199-xx	332115-xx
Complete with connector (female) and D-sub connector (male) for IK 115/IK 215		524599-xx	310196-xx	324544-xx
With one connector (female)		634265-xx	309777-xx	309778-xx
Cable without connectors, Ø 8 mm		–	244957-01	266306-01
Mating element on connecting cable to connector on encoder cable	**Connector (female)** for cable Ø 8 mm 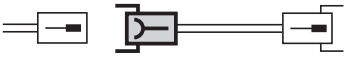	–	291697-05	291697-26
Connector on connecting cable for connection to subsequent electronics	**Connector (male)** for cable Ø 8 mm Ø 6 mm 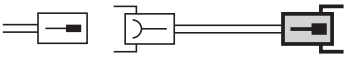	–	291697-08 291697-07	291697-27
Coupling on connecting cable	**Coupling (male)** for cable Ø 4.5 mm Ø 6 mm Ø 8 mm 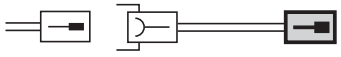	–	291698-14 291698-03 291698-04	291698-25 291698-26 291698-27
Flange socket for mounting on subsequent electronics	**Flange socket (female)** 	–	315892-08	315892-10
Mounted couplings	**With flange (female)** Ø 6 mm Ø 8 mm 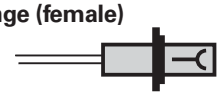	–	291698-17 291698-07	291698-35
	With flange (male) Ø 6 mm Ø 8 mm 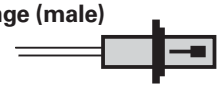	–	291698-08 291698-31	291698-41 291698-29
	With central fastening (male) Ø 6 to 10 mm 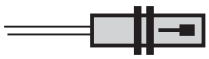	–	741045-01	741045-02
Adapter ~ 1 V_{PP}/11 µA_{PP} For converting the 1 V_{PP} signals to 11 µA_{PP}; 12-pin M23 connector (female) and 9-pin M23 connector (male)	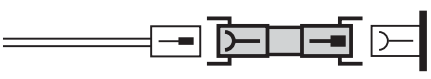	–	364914-01	–

HEIDENHAIN Measuring Equipment
For Incremental Encoders

The **PWM 9** is a universal measuring device for checking and adjusting HEIDENHAIN incremental encoders. There are different expansion modules available for checking the different encoder signals. The values can be read on an LCD monitor. Soft keys provide ease of operation.



	PWM 9
Inputs	Expansion modules (interface boards) for 11 μA_{PP}; 1 V_{PP}; TTL; HTL; EnDat*/SSI*/commutation signals *No display of position values or parameters
Functions	• **Measures** signal amplitudes, current consumption, operating voltage, scanning frequency • **Graphically displays** incremental signals (amplitudes, phase angle and on-off ratio) and the reference-mark signal (width and position) • **Displays symbols** for the reference mark, fault detection signal, counting direction • **Universal counter,** interpolation selectable from single to 1 024-fold • **Adjustment support** for exposed linear encoders
Outputs	• Inputs are connected through to the subsequent electronics • BNC sockets for connection to an oscilloscope
Power supply	10 to 30 V, max. 15 W
Dimensions	150 mm × 205 mm × 96 mm

For Absolute Encoders

HEIDENHAIN offers an adjusting and testing package for diagnosis and adjustment of HEIDENHAIN encoders with absolute interface.
- PC expansion board **IK 215**
- **ATS** adjusting and testing software



	IK 215
Encoder input	• EnDat 2.1 or EnDat 2.2 (absolute value with/without incremental signals) • FANUC serial interface • Mitsubishi High Speed Serial Interface • SSI
Interface	PCI bus Rev. 2.1
System requirements	• Operating system: Windows XP (Vista upon request) • Approx. 20 MB free space on the hard disk
Signal subdivision for incremental signals	Up to 65 536-fold
Dimensions	100 mm x 190 mm

	ATS
Languages	Choice between English or German
Functions	• Position display • Connection dialog • Diagnosis • Mounting wizard for ECI/EQI • Additional functions (if supported by the encoder) • Memory contents

Evaluation Electronics

IK 220
Universal PC counter card
The IK 220 is an expansion board for PCs for recording the measured values of two incremental or absolute linear or angle encoders. The subdivision and counting electronics subdivide the sinusoidal input signals up to 4096-fold. A driver software package is included in delivery.



For more information, see the *IK 220* Product Information document as well as the Product Overview of *Interface Electronics*.

	IK 220			
Input signals (switchable)	~ 1 V_{PP}	~ 11 μA_{PP}	EnDat 2.1	SSI
Encoder inputs	Two D-sub connections (15-pin, male)			
Input frequency	≤ 500 kHz	≤ 33 kHz	–	
Cable length	≤ 60 m		≤ 50 m	≤ 10 m
Signal subdivision (signal period : meas. step)	Up to 4096-fold			
Data register for measured values (per channel)	48 bits (44 bits used)			
Internal memory	For 8192 position values			
Interface	PCI bus			
Driver software and demonstration program	**For Windows 98/NT/2000/XP** in VISUAL C++, VISUAL BASIC and BORLAND DELPHI			
Dimensions	Approx. 190 mm × 100 mm			

Windows is a registered trademark of the Microsoft Corporation.

Power Supply

Connect HEIDENHAIN encoders only to subsequent electronics whose power supply is generated from PELV systems **(EN 50178).** In addition, overcurrent protection and overvoltage protection are required in safety-related applications.

If HEIDENHAIN encoders are to be operated in accordance with IEC 61010-1, the power must be supplied from a secondary circuit with current or power limitation as per IEC 61010-1:2001, section 9.3 or IEC 60950-1:2005, section 2.5 or a Class 2 secondary circuit as specified in UL1310.

The encoders require a **stabilized DC voltage U_P** as power supply. The respective *Specifications* state the required power supply and the current consumption. The permissible ripple content of the DC voltage is:

- High frequency interference
  U_{PP} < 250 mV with dU/dt > 5 V/µs
- Low frequency fundamental ripple
  U_{PP} < 100 mV

The values apply as measured at the encoder, i.e., without cable influences. The voltage can be monitored and adjusted with the encoder's **sensor lines.** If a controllable power supply is not available, the voltage drop can be halved by switching the sensor lines parallel to the corresponding power lines.

Calculation of the **voltage drop**:

$$\Delta U = 2 \cdot 10^{-3} \cdot \frac{1.05 \cdot L_C \cdot I}{56 \cdot A_P}$$

where

- ΔU: Voltage attenuation in V
- 1.05: Length factor due to twisted wires
- L_C: Cable length in m
- I: Current consumption in mA
- A_P: Cross section of power lines in mm²

The voltage actually applied to the encoder is to be considered when **calculating the encoder's power requirement.** This voltage consists of the supply voltage U_P provided by the subsequent electronics minus the line drop at the encoder. For encoders with an expanded supply range, the voltage drop in the power lines must be calculated under consideration of the nonlinear current consumption (see next page).

If the voltage drop is known, all parameters for the encoder and subsequent electronics can be calculated, e.g. voltage at the encoder, current requirements and power consumption of the encoder, as well as the power to be provided by the subsequent electronics.

Switch-on/off behavior of the encoders
The output signals are valid no sooner than after switch-on time t_{SOT} = 1.3 s (2 s for PROFIBUS-DP) (see diagram). During time t_{SOT} they can have any levels up to 5.5 V (with HTL encoders up to U_{Pmax}). If an interpolation electronics unit is inserted between the encoder and the power supply, this unit's switch-on/off characteristics must also be considered. If the power supply is switched off, or when the supply voltage falls below U_{min}, the output signals are also invalid. During restart, the signal level must remain below 1 V for the time t_{SOT} before power up. These data apply to the encoders listed in the catalog—customer-specific interfaces are not included.

Encoders with new features and increased performance range may take longer to switch on (longer time t_{SOT}). If you are responsible for developing subsequent electronics, please contact HEIDENHAIN in good time.

Isolation
The encoder housings are isolated against internal circuits.

Rated surge voltage: 500 V
(preferred value as per VDE 0110 Part 1, overvoltage category II, contamination level 2)

Transient response of supply voltage and switch-on/switch-off behavior

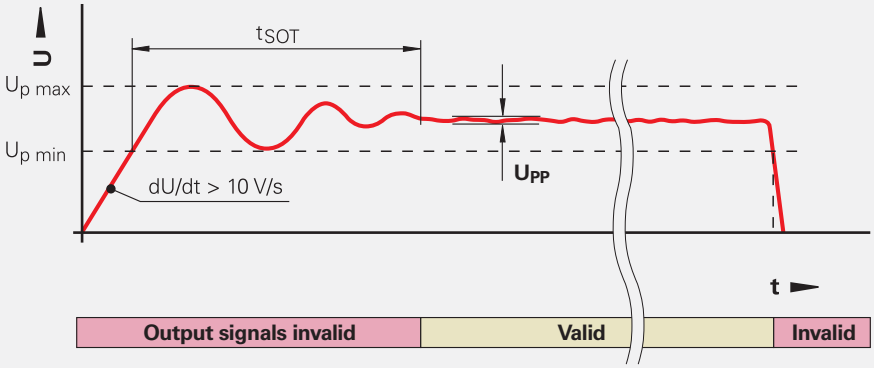

Cable	Cross section of power supply lines A_P			
	1 V_{PP}/TTL/HTL	**11 µA_{PP}**	**EnDat/SSI** 17-pin	**EnDat**[5] 8-pin
Ø 3.7 mm	0.05 mm²	–	–	0.09 mm²
Ø 4.3 mm	0.24 mm²	–	–	–
Ø 4.5 mm EPG	0.05 mm²	–	0.05 mm²	0.09 mm²
Ø 4.5 mm **Ø 5.1 mm**	0.14/0.09[2] mm² 0.05[2, 3] mm²	0.05 mm²	0.05 mm²	0.14 mm²
Ø 6 mm **Ø 10 mm**[1]	0.19/0.14[2, 4] mm²	–	0.08 mm²	0.34 mm²
Ø 8 mm **Ø 14 mm**[1]	0.5 mm²	1 mm²	0.5 mm²	1 mm²

[1] Metal armor [2] Rotary encoders [3] Length gauges [4] LIDA 400
[5] Also Fanuc, Mitsubishi

Encoders with expanded voltage supply range

For encoders with expanded supply voltage range the current consumption has a nonlinear relationship with the supply voltage. On the other hand, the power consumption follows a linear curve (see *Current and power consumption* diagram). The maximum power consumption at minimum and maximum supply voltage is listed in the **Specifications.** The power consumption at maximum supply voltage (worst case) accounts for:

- Recommended receiver circuit
- Cable length: 1 m
- Age and temperature influences
- Proper use of the encoder with respect to clock frequency and cycle time

The typical current consumption at no load (only supply voltage is connected) for 5 V supply is specified.

The actual power consumption of the encoder and the required power output of the subsequent electronics are measured while taking the voltage drop on the supply lines in four steps:

***Step 1:* Resistance of the supply lines**

The resistance values of the power lines (adapter cable and encoder cable) can be calculated with the following formula:

$$R_L = 2 \cdot \frac{1.05 \cdot L_C}{56 \cdot A_P}$$

***Step 2:* Coefficients for calculation of the drop in line voltage**

$$b = -R_L \cdot \frac{P_{Emax} - P_{Emin}}{U_{Emax} - U_{Emin}} - U_P$$

$$c = P_{Emin} \cdot R_L + \frac{P_{Emax} - P_{Emin}}{U_{Emax} - U_{Emin}} \cdot R_L \cdot (U_P - U_{Emin})$$

***Step 3:* Voltage drop based on the coefficients b and c**

$$\Delta U = -0.5 \cdot (b + \sqrt{b^2 - 4 \cdot c})$$

***Step 4:* Parameters for subsequent electronics and the encoder**

Voltage at encoder:
$U_E = U_P - \Delta U$

Current requirement of encoder:
$I_E = \Delta U / R_L$

Power consumption of encoder:
$P_E = U_E \cdot I_E$

Power output of subsequent electronics:
$P_S = U_P \cdot I_E$

Where:

U_{Emax}, U_{Emin}: Minimum or maximum supply voltage of the encoder in V

P_{Emin}, P_{Emax}: Maximum power consumption at minimum and maximum power supply, respectively, in W

U_S: Supply voltage of the subsequent electronics in V

R_L: Cable resistance (for both directions) in ohms

ΔU: Voltage drop in the cable in V

1.05: Length factor due to twisted wires

L_C: Cable length in m

A_P: Cross section of power lines in mm^2

Influence of cable length on the power output of the subsequent electronics (example representation)

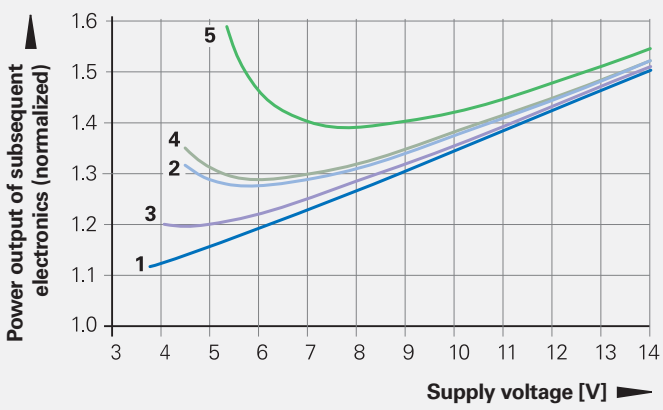

	Encoder cable/adapter cable	Connecting cable	Total
1	3 m	/	3 m
2	20 m	/	20 m
3	3 m	17 m	20 m
4	3 m	47 m	50 m
5	3 m	97 m	100 m

Current and power consumption with respect to the supply voltage (example representation)

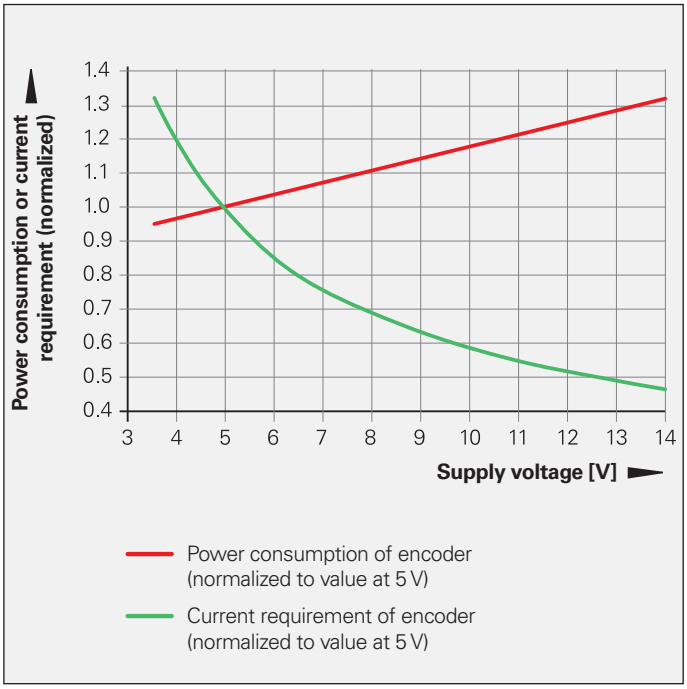

Electrically Permissible Speed/ Traversing Speed

The maximum permissible shaft speed or traversing velocity of an encoder is derived from

- the **mechanically** permissible shaft speed/traversing velocity (if listed in the *Specifications*)
  and
- the **electrically** permissible shaft speed/ traversing velocity.

  For encoders with **sinusoidal output signals,** the electrically permissible shaft speed/traversing velocity is limited by the –3dB/ –6dB cutoff frequency or the permissible input frequency of the subsequent electronics.

  For encoders with **square-wave signals,** the electrically permissible shaft speed/ traversing velocity is limited by
  – the maximum permissible scanning frequency f_{max} of the encoder
    and
  – the minimum permissible edge separation a for the subsequent electronics.

For angular or rotary encoders

$$n_{max} = \frac{f_{max}}{z} \cdot 60 \cdot 10^3$$

For linear encoders

$$v_{max} = f_{max} \cdot SP \cdot 60 \cdot 10^{-3}$$

Where:

n_{max}: Elec. permissible speed in min^{-1}
v_{max}: Elec. permissible traversing velocity in m/min
f_{max}: Max. scanning/output frequency of encoder or input frequency of subsequent electronics in kHz
z: Line count of the angle or rotary encoder per 360 °
SP: Signal period of the linear encoder in µm

Cable

For safety-related applications, use HEIDENHAIN cables and connectors.

Versions
The cables of almost all HEIDENHAIN encoders and all adapter and connecting cables are sheathed in **polyurethane (PUR cable).** Most adapter cables for within motors and a few cables on encoders are sheathed in a **special elastomer (EPG cable).** These cables are identified in the specifications or in the cable tables with "EPG."

Durability
PUR cables are resistant to oil and hydrolysis in accordance with **VDE 0472** (Part 803/test type B) and resistant to microbes in accordance with **VDE 0282** (Part 10). They are free of PVC and silicone and comply with UL safety directives. The **UL certification** AWM STYLE 20963 80 °C 30 V E63216 is documented on the cable.

EPG cables are resistant to oil in accordance with **VDE 0472** (Part 803/test type B) and to hydrolysis in accordance with **VDE 0282** (Part 10). They are free of silicone and halogens. In comparison with PUR cables, they are only conditionally resistant to media, frequent flexing and continuous torsion.

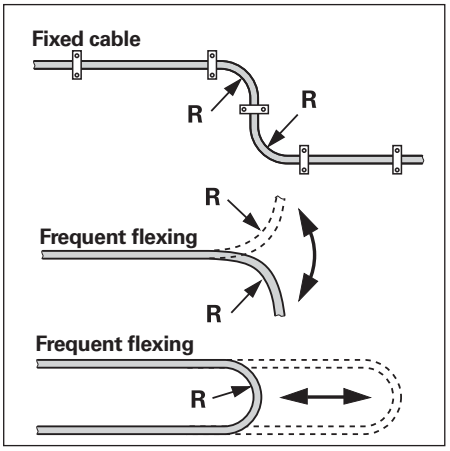

Temperature range
HEIDENHAIN cables can be used for

rigid configuration (PUR)	–40 to 80 °C
rigid configuration (EPG)	–40 to 120 °C
frequent flexing (PUR)	–10 to 80 °C

PUR cables with limited resistance to hydrolysis and microbes are rated for up to 100 °C. If needed, please ask for assistance from HEIDENHAIN Traunreut.

Lengths
The **cable lengths** listed in the *Specifications* apply only for HEIDENHAIN cables and the recommended input circuitry of subsequent electronics.

Cable	Bend radius R	
	Fixed cable	Frequent flexing
Ø 3.7 mm	≥ 8 mm	≥ 40 mm
Ø 4.3 mm	≥ 10 mm	≥ 50 mm
Ø 4.5 mm EPG	≥ 18 mm	–
Ø 4.5 mm **Ø 5.1 mm**	≥ 10 mm	≥ 50 mm
Ø 6 mm **Ø 10 mm**[1)]	≥ 20 mm ≥ 35 mm	≥ 75 mm ≥ 75 mm
Ø 8 mm **Ø 14 mm**[1)]	≥ 40 mm ≥ 100 mm	≥ 100 mm ≥ 100 mm

[1)] Metal armor

Noise-Free Signal Transmission

Electromagnetic compatibility/ CE -compliance
When properly installed, and when HEIDENHAIN connecting cables and cable assemblies are used, HEIDENHAIN encoders fulfill the requirements for electromagnetic compatibility according to 2004/108/EC with respect to the generic standards for:

- **Noise EN 61000-6-2:**
  Specifically:
  – ESD EN 61000-4-2
  – Electromagnetic fields EN 61000-4-3
  – Burst EN 61000-4-4
  – Surge EN 61000-4-5
  – Conducted disturbances EN 61000-4-6
  – Power frequency magnetic fields EN 61000-4-8
  – Pulse magnetic fields EN 61000-4-9
- **Interference EN 61000-6-4:**
  Specifically:
  – For industrial, scientific and medical equipment (ISM) EN 55011
  – For information technology equipment EN 55022

Transmission of measuring signals— electrical noise immunity
Noise voltages arise mainly through capacitive or inductive transfer. Electrical noise can be introduced into the system over signal lines and input or output terminals.
Possible sources of noise include:

- Strong magnetic fields from transformers, brakes and electric motors
- Relays, contactors and solenoid valves
- High-frequency equipment, pulse devices, and stray magnetic fields from switch-mode power supplies
- AC power lines and supply lines to the above devices

Protection against electrical noise
The following measures must be taken to ensure disturbance-free operation:

- Use only original HEIDENHAIN cables. Consider the voltage attenuation on supply lines.
- Use connecting elements (such as connectors or terminal boxes) with metal housings. Only the signals and power supply of the connected encoder may be routed through these elements. Applications in which additional signals are sent through the connecting element require specific measures regarding electrical safety and EMC.
- Connect the housings of the encoder, connecting elements and subsequent electronics through the shield of the cable. Ensure that the shield has complete contact over the entire surface (360°). For encoders with more than one electrical connection, refer to the documentation for the respective product.
- For cables with multiple shields, the inner shields must be routed separately from the outer shield. Connect the inner shield to 0 V of the subsequent electronics. Do not connect the inner shields with the outer shield, neither in the encoder nor in the cable.
- Connect the shield to protective ground as per the mounting instructions.
- Prevent contact of the shield (e.g. connector housing) with other metal surfaces. Pay attention to this when installing cables.
- Do not install signal cables in the direct vicinity of interference sources (inductive consumers such as contacts, motors, frequency inverters, solenoids, etc.).
  – Sufficient decoupling from interference-signal-conducting cables can usually be achieved by an air clearance of 100 mm or, when cables are in metal ducts, by a grounded partition.
  – A minimum spacing of 200 mm to inductors in switch-mode power supplies is required.
- If compensating currents are to be expected within the overall system, a separate equipotential bonding conductor must be provided. The shield does not have the function of an equipotential bonding conductor.
- Only provide power from PELV systems **(EN 50178)** to position encoders. Provide high-frequency grounding with low impedance **(EN 60204-1 Chap. EMC).**
- For encoders with 11-μA_{PP} interface: For extension cables, use only HEIDENHAIN cable ID 244955-01. Overall length: max. 30 m.

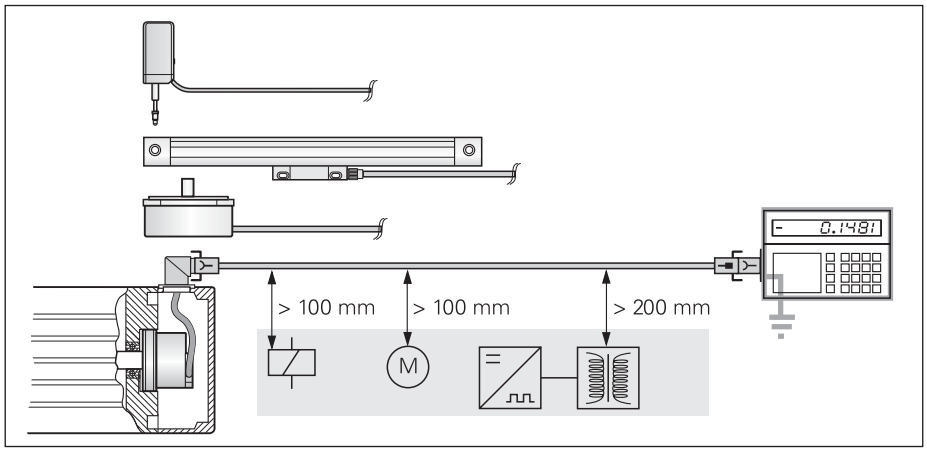

Minimum distance from sources of interference

Sales and Service
For More information

Other devices for angular measurement from HEIDENHAIN include rotary encoders, which are used primarily on electrical motors, for elevator control and for potentially explosive atmospheres. Angle encoders from HEIDENHAIN serve for high-accuracy position acquisition of angular movements.

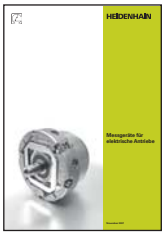

Brochure
Encoders for Servo Drives

Contents:
Rotary encoders
Angle encoders
Linear encoders



Brochure
Angle Encoders with Integral Bearing

Contents:
Absolute angle encoders
RCN
Incremental angle encoders
RON, RPN, ROD



Brochure
Angle encoders without integral bearing

Contents:
Incremental angle encoders
ERA, ERP



Product Overview
Rotary Encoders for the Elevator Industry



Product Overview
Rotary Encoders for Potentially Explosive Atmospheres



Product Information
Magnetic Modular Encoders

Further HEIDENHAIN products
- Linear encoders
- Length gauges
- Measuring systems for machine tool inspection and acceptance testing
- Subsequent electronics
- NC controls for machine tools
- Touch probes

HEIDENHAIN on the Internet
Visit our home page at
www.heidenhain.com
for up-to-date information on:
- The company
- The products

Also included:
- Technical articles
- Press releases
- Addresses
- CAD drawings

Addresses in Germany

HEIDENHAIN is represented in Germany and all other important industrial nations as well. In addition to the addresses listed on the back page, there are many service agencies located worldwide. For their addresses, please refer to the Internet or contact HEIDENHAIN Traunreut.

Germany – Technical Information

HEIDENHAIN Technisches Büro Nord
Rhinstraße 134
12681 Berlin, Deutschland
☎ 030 54705-240
FAX 030 54705-200
E-Mail: tbn@heidenhain.de

HEIDENHAIN Technisches Büro West
Revierstraße 19
44379 Dortmund, Deutschland
☎ 0231 618083-0
FAX 0231 618083-29
E-Mail: tbw@heidenhain.de

HEIDENHAIN Technisches Büro Südost
Dr.-Johannes-Heidenhain-Straße 5
83301 Traunreut, Deutschland
☎ 08669 311345
FAX 08669 5061
E-Mail: tbso@heidenhain.de

HEIDENHAIN Technisches Büro Mitte
Kaltes Feld 22
08468 Heinsdorfergrund, Deutschland
☎ 03765 69544
FAX 03765 69628
E-Mail: tbm@heidenhain.de

HEIDENHAIN Technisches Büro Südwest
Ebene 6
Gutenbergstraße 17
70771 Leinfelden-Echterdingen, Deutschland
☎ 0711 993395-0
FAX 0711 993395-28
E-Mail: tbsw@heidenhain.de

Germany – Information and Sales

TEDI Technische Dienste GmbH
Im Hegen 14a
22113 Oststeinbek
☎ 040 7148672-0
E-Mail: hamburg@tedi-online.de

RHEINWERKZEUG GmbH & Co.KG
Gablonzstraße 8
38114 Braunschweig
☎ 0531 25659-0
E-Mail: braunschweig@rheinwerkzeug.de

FRIEDRICH STRACK Maschinen GmbH
Buchenhofener Straße 19
42329 Wuppertal
☎ 0202 385-0
E-Mail: info@strack-maschinen.de

Walter BAUTZ GmbH
Mess- und Spanntechnik
Mühlenweg 8
64347 Griesheim
☎ 06155 8422-0
E-Mail: info@walterbautz-gmbh.de

BRAUN Werkzeugmaschinen Vertrieb und Service GmbH
Industriestraße 41
72585 Riederich
☎ 07123 9343-0
E-Mail: hh@braun-werkzeugmaschinen.de

HAAS Werkzeugmaschinen GmbH
Heinrich-Hertz-Straße 16
78052 VS-Villingen
☎ 07721 9559-0
E-Mail: info@haas-wzm.de

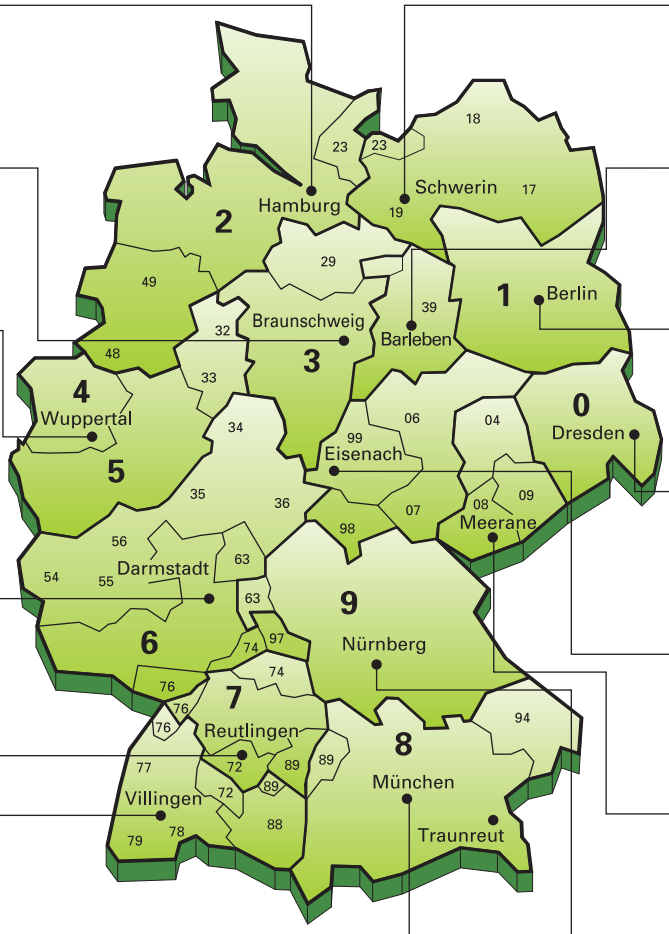

TEDI Technische Dienste GmbH
Werkstraße 113
19061 Schwerin
☎ 0385 61721-0
E-Mail: schwerin-jh@tedi-online.de

TEDI Technische Dienste GmbH
Lindenallee 18
39179 Barleben
☎ 039203 7518-0
E-Mail: magdeburg-jh@tedi-online.de

MOSER Industrie-Elektronik GmbH
Geneststraße 5
10829 Berlin
☎ 030 7515737
E-Mail: mosergmbh.berlin@t-online.de

TEDI Technische Dienste GmbH
Großenhainer Straße 99
01127 Dresden
☎ 0351 4278020
E-Mail: dresden-jh@tedi-online.de

WWZ-Vertrieb GmbH
Werkzeugmaschinen
An der Allee 9
99848 Wutha-Farnroda
☎ 036921 23-0
E-Mail: J.Wellendorf@wwz-vertrieb.de

HEMPEL Werkzeugmaschinen
Pestalozzistraße 58
08393 Meerane
☎ 03764 3064
E-Mail: info@hempel-wzm.de

BRAUN Werkzeugmaschinen Vertrieb und Service GmbH
Anton-Pendele-Straße 3
82275 Emmering
☎ 08141 9714
E-Mail: info@braunem.de

KL Messtechnik & Service GmbH & Co. KG
Im Gewerbegebiet 4
91093 Heßdorf
☎ 09135 73609-0
E-Mail: info@kl-messtechnik.de

HEIDENHAIN

DR. JOHANNES HEIDENHAIN GmbH
Dr.-Johannes-Heidenhain-Straße 5
83301 Traunreut, Germany
☏ +49 8669 31-0
FAX +49 8669 5061
E-mail: info@heidenhain.de

www.heidenhain.de

Vollständige und weitere Adressen siehe www.heidenhain.de
For complete and further addresses see www.heidenhain.de

DE **HEIDENHAIN Technisches Büro Nord**
12681 Berlin, Deutschland
☏ 030 54705-240

HEIDENHAIN Technisches Büro Mitte
08468 Heinsdorfergrund, Deutschland
☏ 03765 69544

HEIDENHAIN Technisches Büro West
44379 Dortmund, Deutschland
☏ 0231 618083-0

HEIDENHAIN Technisches Büro Südwest
70771 Leinfelden-Echterdingen, Deutschland
☏ 0711 993395-0

HEIDENHAIN Technisches Büro Südost
83301 Traunreut, Deutschland
☏ 08669 31-1345

AR **NAKASE SRL.**
B1653AOX Villa Ballester, Argentina
www.heidenhain.com.ar

AT **HEIDENHAIN Techn. Büro Österreich**
83301 Traunreut, Germany
www.heidenhain.de

AU **FCR Motion Technology Pty. Ltd**
Laverton North 3026, Australia
E-mail: vicsales@fcrmotion.com

BA Bosnia and Herzegovina → **SL**

BE **HEIDENHAIN NV/SA**
1760 Roosdaal, Belgium
www.heidenhain.be

BG **ESD Bulgaria Ltd.**
Sofia 1172, Bulgaria
www.esd.bg

BR **DIADUR Indústria e Comércio Ltda.**
04763-070 – São Paulo – SP, Brazil
www.heidenhain.com.br

BY **Belarus**
GERTNER Service GmbH
50354 Huerth, Germany
www.gertner.biz

CA **HEIDENHAIN CORPORATION**
Mississauga, OntarioL5T2N2, Canada
www.heidenhain.com

CH **HEIDENHAIN (SCHWEIZ) AG**
8603 Schwerzenbach, Switzerland
www.heidenhain.ch

CN **DR. JOHANNES HEIDENHAIN (CHINA) Co., Ltd.**
Beijing 101312, China
www.heidenhain.com.cn

CZ **HEIDENHAIN s.r.o.**
102 00 Praha 10, Czech Republic
www.heidenhain.cz

DK **TP TEKNIK A/S**
2670 Greve, Denmark
www.tp-gruppen.dk

ES **FARRESA ELECTRONICA S.A.**
08028 Barcelona, Spain
www.farresa.es

FI **HEIDENHAIN Scandinavia AB**
02770 Espoo, Finland
www.heidenhain.fi

FR **HEIDENHAIN FRANCE sarl**
92310 Sèvres, France
www.heidenhain.fr

GB **HEIDENHAIN (G.B.) Limited**
Burgess Hill RH15 9RD, United Kingdom
www.heidenhain.co.uk

GR **MB Milionis Vassilis**
17341 Athens, Greece
www.heidenhain.gr

HK **HEIDENHAIN LTD**
Kowloon, Hong Kong
E-mail: service@heidenhain.com.hk

HR Croatia → **SL**

HU **HEIDENHAIN Kereskedelmi Képviselet**
1239 Budapest, Hungary
www.heidenhain.hu

ID **PT Servitama Era Toolsindo**
Jakarta 13930, Indonesia
E-mail: ptset@group.gts.co.id

IL **NEUMO VARGUS MARKETING LTD.**
Tel Aviv 61570, Israel
E-mail: neumo@neumo-vargus.co.il

IN **HEIDENHAIN Optics & Electronics India Private Limited**
Chennai – 600 031, India
www.heidenhain.in

IT **HEIDENHAIN ITALIANA S.r.l.**
20128 Milano, Italy
www.heidenhain.it

JP **HEIDENHAIN K.K.**
Tokyo 194-0215, Japan
www.heidenhain.co.jp

KR **HEIDENHAIN Korea LTD.**
Gasan-Dong, Seoul, Korea 153-782
www.heidenhain.co.kr

ME Montenegro → **SL**

MK Macedonia → **BG**

MX **HEIDENHAIN CORPORATION MEXICO**
20235 Aguascalientes, Ags., Mexico
E-mail: info@heidenhain.com

MY **ISOSERVE Sdn. Bhd**
56100 Kuala Lumpur, Malaysia
E-mail: isoserve@po.jaring.my

NL **HEIDENHAIN NEDERLAND B.V.**
6716 BM Ede, Netherlands
www.heidenhain.nl

NO **HEIDENHAIN Scandinavia AB**
7300 Orkanger, Norway
www.heidenhain.no

PH **Machinebanks` Corporation**
Quezon City, Philippines 1113
E-mail: info@machinebanks.com

PL **APS**
02-489 Warszawa, Poland
www.apserwis.com.pl

PT **FARRESA ELECTRÓNICA, LDA.**
4470 - 177 Maia, Portugal
www.farresa.pt

RO **HEIDENHAIN Reprezentanţă Romania**
Braşov, 500338, Romania
www.heidenhain.ro

RS Serbia → **BG**

RU **OOO HEIDENHAIN**
125315 Moscow, Russia
www.heidenhain.ru

SE **HEIDENHAIN Scandinavia AB**
12739 Skärholmen, Sweden
www.heidenhain.se

SG **HEIDENHAIN PACIFIC PTE LTD.**
Singapore 408593
www.heidenhain.com.sg

SK **KOPRETINA TN s.r.o.**
91101 Trencin, Slovakia
www.kopretina.sk

SL **Posredništvo HEIDENHAIN NAVO d.o.o.**
2000 Maribor, Slovenia
www.heidenhain-hubl.si

TH **HEIDENHAIN (THAILAND) LTD**
Bangkok 10250, Thailand
www.heidenhain.co.th

TR **T&M Mühendislik San. ve Tic. LTD. ŞTİ.**
34728 Ümraniye-Istanbul, Turkey
www.heidenhain.com.tr

TW **HEIDENHAIN Co., Ltd.**
Taichung 40768, Taiwan R.O.C.
www.heidenhain.com.tw

UA **Gertner Service GmbH Büro Kiev**
01133 Kiev, Ukraine
www.gertner.biz

US **HEIDENHAIN CORPORATION**
Schaumburg, IL 60173-5337, USA
www.heidenhain.com

VE **Maquinaria Diekmann S.A.**
Caracas, 1040-A, Venezuela
E-mail: purchase@diekmann.com.ve

VN **AMS Co. Ltd**
HCM City, Vietnam
E-mail: davidgoh@amsvn.com

ZA **MAFEMA SALES SERVICES C.C.**
Midrand 1685, South Africa
www.heidenhain.co.za

Zum Abheften hier falzen! / *Fold here for filing!*

349 529-2A · 40 · 8/2010 · H · Printed in Germany

Automation and Metrology International, LLC
1-888-354-2525
auto-met.com