LEINE LINDE

# HEAVY DUTY 800 SERIES

INCREMENTAL ENCODERS FOR HEAVY DUTY INDUSTRIES

**Automation and Metrology International, LLC**
8808 Tyler Blvd, Mentor, OH 44060

**1-888-354-2525 | sales@auto-met.com**
Request a quote: auto-met.com

# Robustness and reliability

**Are you looking for the most robust, maintenance-free and cost-effective encoder? Then the 800 series is for you – it's the first choice of most engineers!**

The product series has a long history of successful operation in applications within heavy industries, such as the steel, paper and wind power industries. These applications place stringent demands on robustness and reliability, and the encoder is designed thereafter. Mechanically it features a dual set of heavy duty bearings and a well-encapsulated enclosure. The electronics are designed to withstand an environment where it is exposed to powerful vibrations, electronic disturbances, and shock.

The 800 series can also be equipped with Leine Linde's advanced diagnostics system, ADS, for condition-based maintenance. ADS constantly monitors the encoder's key functions and environmental parameters. In case an impending fault is detected a warning signal is immediately generated. This enables service that is only performed as necessary and that can be planned in ample time to avoid unforeseen breakdowns.

# Quality into every

### Enclosure

Robust cover with ingress protection class IP67 for protection against dust and liquids. Verified for use in salt water environments.
Model available with ATEX/IECEx certification for hazardous environments.

### Shaft and flange

Robust shaft sealing verified for IP66. O-ring for tight sealing of the hollow shaft to its mating shaft. Hollow shafts for fixing with an axial screw. Shaft dimensions: Ø12 mm, Ø16 mm, Ø17 mm taper. Solid shaft Ø 11 mm with key nut, and B10 Euro flange, for fixing with a shaft coupling.
Through-going hollow shaft with dimensions Ø 25 mm or Ø 1 inch.

### Bearings

Insulated peek insert to protect the bearings from shaft currents. Model available with ceramic bearings for increased insulation and prolonged lifetime.
Heavy duty bearings allow the encoder to be placed in the most demanding environments, where it can be subjected to shock and vibrations daily without losing quality or accuracy.

### Shock, vibrations, and temperature resistance

High accuracy code discs and robust electronics verified for powerful shocks, vibrations, and extreme temperatures.

### Stable and easy mounting

Torque bracket available in a variety of orientations, for fixing of the torque arm.
Separate back cover for connection of cable wires to screw terminals.
Ample space for easy handling when connecting the cables.
M23 connector or pre-mounted cable with or without flying connector available.

### Protected against electronic interference

Short-circuit protection and polarity protection as standard.
Overvoltage protection for protection against voltage peaks on the supply, for example due to lightning strokes.
Earthing strap to conduct currents away from the encoder cover.

# detail

### Resolution

Wide range of different pulse rates available from 1 to 10 000 ppr.

### Output signals

Square wave signal output with 6 channels for differential transmission and reference pulse for relative position. Available with a big number of output signals according to market standards, like HTL, TTL, RS422, or 1 Vpp, as well as High Current HTL for transmission over long cables. Dual output models are available, with double scanning sensors and two galvanically insulated electronic circuits. The dual output signals can be used in two separate systems for different functions, or for achieving redundant signals.

### Programmable speed switch

The 800 series can be bought with Overspeed, which is the Leine Linde speed switch solution with four programmable relays for the settings of your choice.

### Data and encoder diagnostics

Leine Linde's ADS solutions are advanced diagnostic systems, built into the encoder, enabling condition monitoring and predicitive maintenance. ADS monitors the encoder functions as well as parameters like vibration and temperature in the motor installation.

### Relevant certifications

Models available certified for use in hazardous areas, ATEX/IECEx zone 1/21, or 2/22. Functional safety certified encoders available up to risk level SIL2, PLd, category 3.

Note that some features described in this overview may only be available on certain models.

# Mechanics

This page offers an overview of the different models in the 800 series. Each model is available in several different variants when it comes to shafts, flanges, resolutions, electronics and connections. Please consult the code keys on pages 14-21 for detailed overview of all options.

## Model 850

Solid shaft encoder with B10 Euro flange.

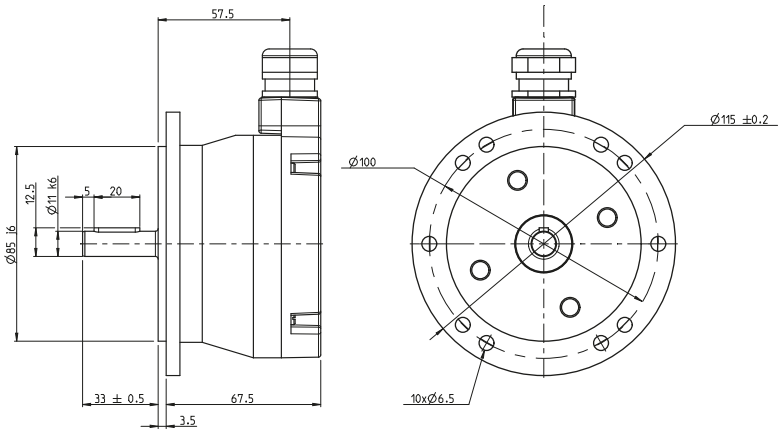


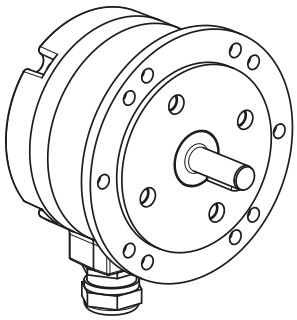

## Model 855

Dual solid shaft encoder with B10 Euro flange. Redundant scanning sensors and two separate electronic circuits with galvanically insulated outputs.

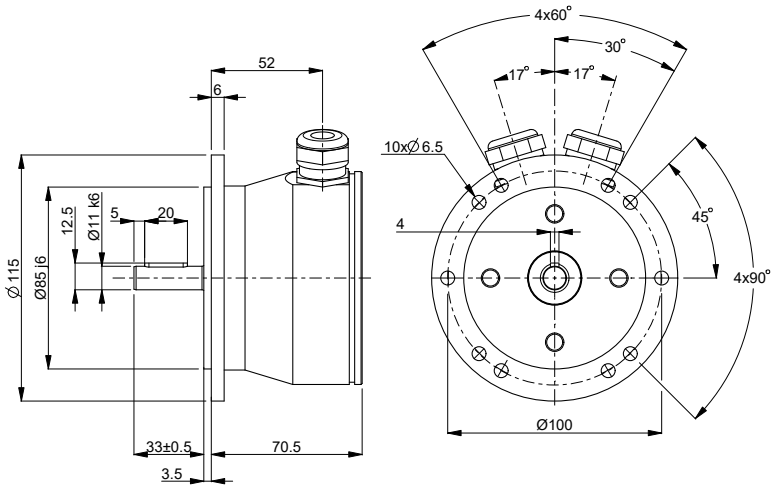


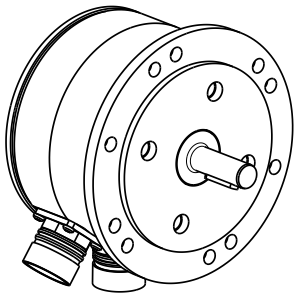

## Model 801

Extra robust hollow shaft encoder with ceramic bearings for extended lifetime.

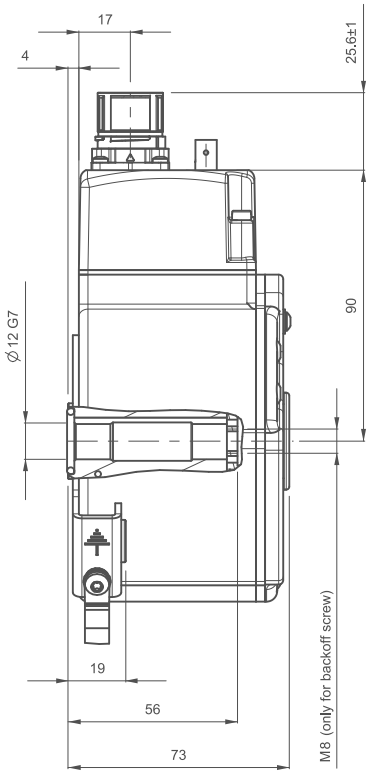


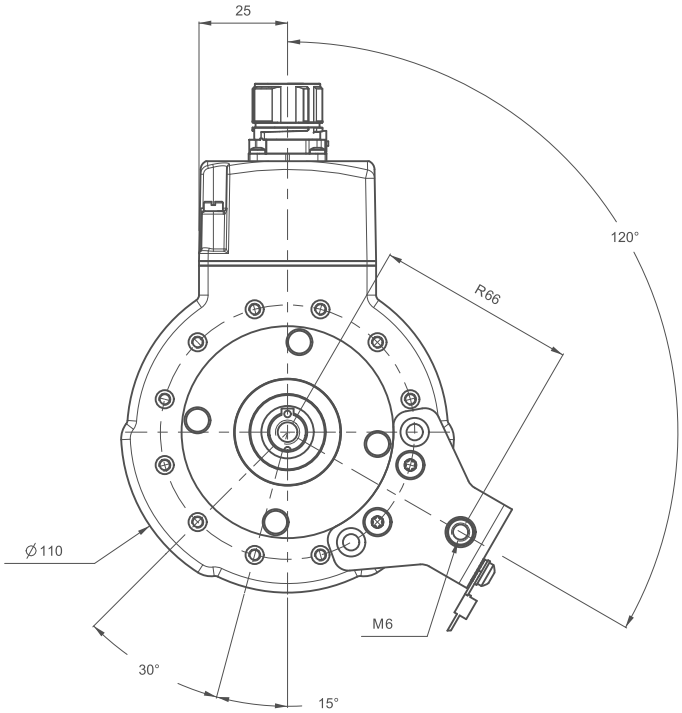


## Model 803

Hollow/trough hollow shaft encoder.

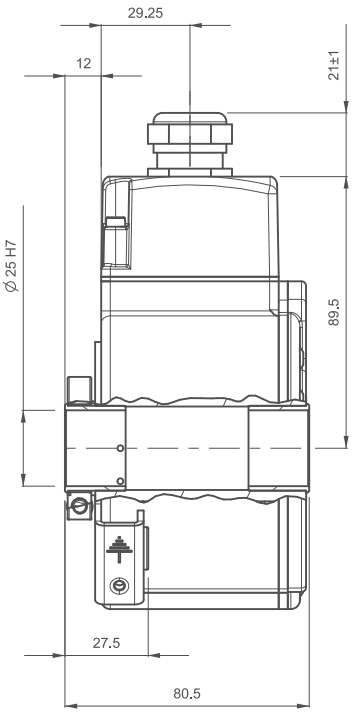


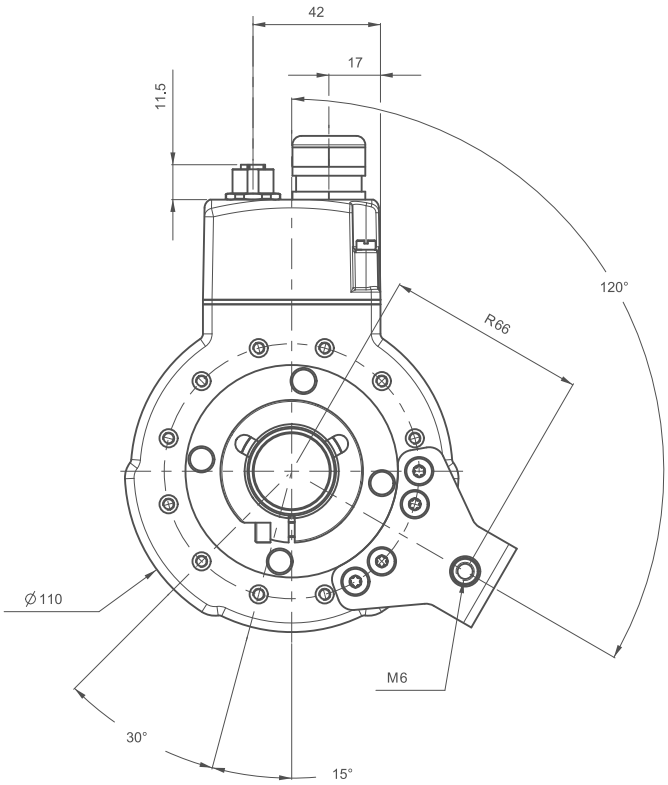

## Model 861

Hollow shaft encoder.

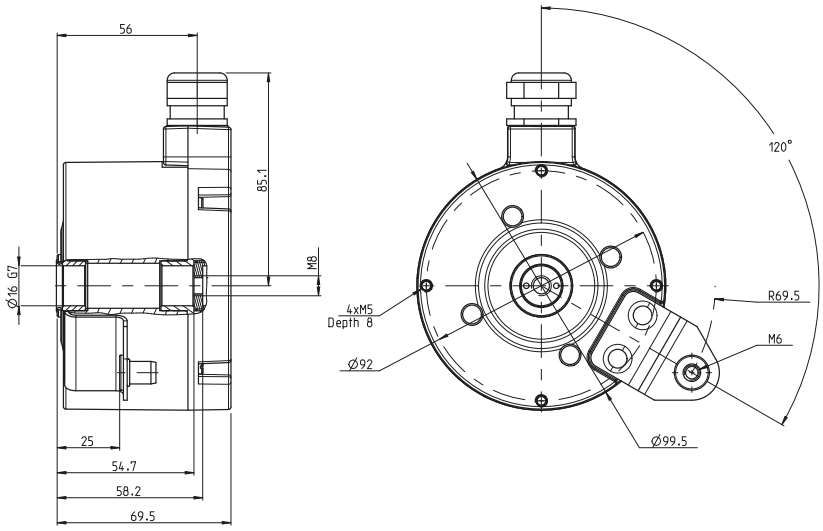


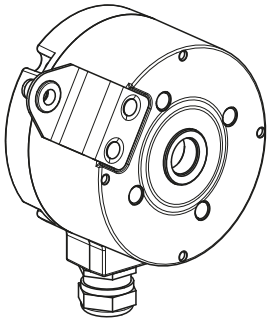

## Model 862

Extra robust hollow shaft encoder with ceramic bearings for extended lifetime.

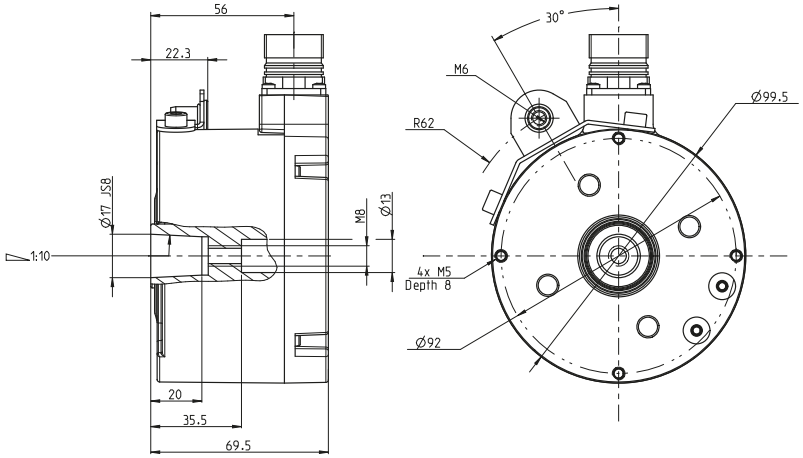


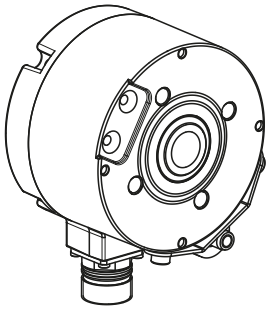

## Model 865

Dual hollow shaft encoder. Redundant scanning sensors and two separate electronic circuits with galvanically insulated outputs. Ceramic bearings available as option.

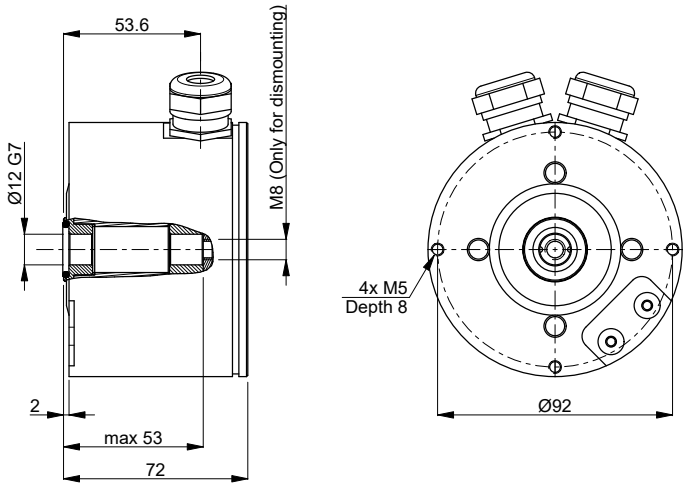


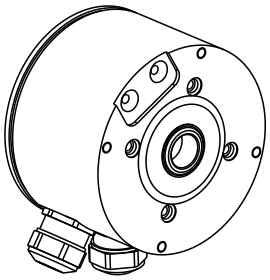

# Model 841

Flameproof hollow shaft encoder intended for use in potentially explosive atmospheres. Certified to be used on most markets.

| Certification with temperature class | Tamb °C | Rpm max |
|---|---|---|
| II 2G Ex db IIC T6<br>II 2D Ex tb IIIC T85°C | -40°C...+40°C | 4200 |
| II 2G Ex db IIC T5<br>II 2D Ex tb IIIC T100°C | -40°C...+60°C | 4200 |
| II 2G Ex db IIC T5<br>II 2D Ex tb IIIC T100°C | -40°C...+70°C | 1500 |
| II 2G Ex db IIC T4<br>II 2D Ex tb IIIC T135°C | -40°C...+70°C | 6000 |

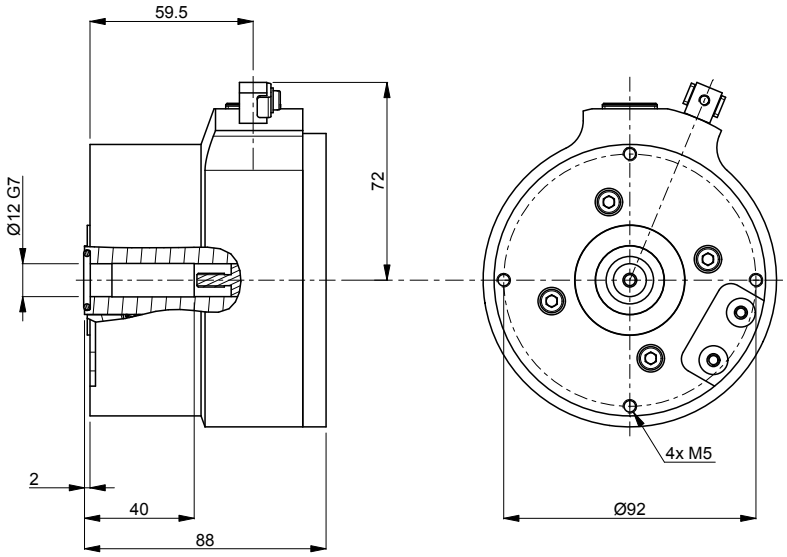


MODULARITY

# Electronics

## Square wave signals

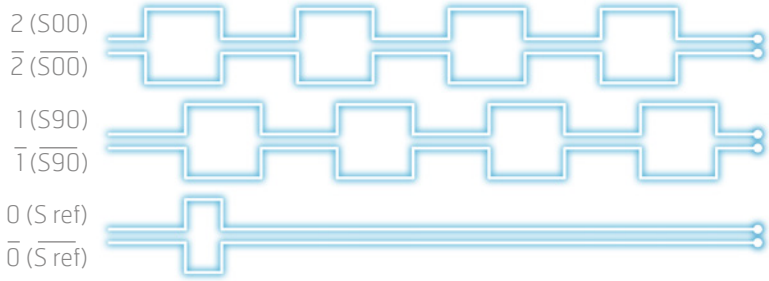


| Interface | TTL | RS 422 | HTL | HCHTL |
|---|---|---|---|---|
| Supply | 5 Vdc | 9-30 Vdc | 9-30 Vdc | 9-30 Vdc |
| Output signal | 5 Vdc | 5 Vdc | 9-30 Vdc | 9-30 Vdc |
| Suitable for | Low frequencies over short cables | High frequencies over long cables | High frequencies over medium-length cables | Medium frequencies over long cables |
| Max frequency | 200 kHz | 200 kHz | 200 kHz | 200 kHz |
| Max cable length | 50 m at 50 kHz | 1000 m (TiA/EIA - 422-B) | 100 m at 100 kHz | 350 m at 100 kHz |

## Dual outputs

Two separate encoders can be combined into one and the same cover. This solution provides added safety in the form of redundancy, the outputs are based on two separate scanning LED:s and electronic circuits. The outputs are galvanically insulated from each other and may be connected to two separate systems for different functions or for redundancy.

- Available in model 855 and 865

## Sine wave signals

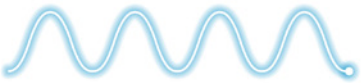

Sine waves are an alternative form of output signal. The analogue signal produces a unique amplitude for each position on the wave, allowing interpolation and very high resolutions. The interface 1 Vpp is often used in safety-critical applications where detection is required of extremely small movements.

- Available in model 801, 803, 850, 861 and 862

## Digital speed over PROFIBUS

With this option the encoder has two different connections, one with a standard incremental output and another for communication over PROFIBUS.
The standard incremental pulse output is used for connection to the inverter for direct speed control, while the additional PROFIBUS output can be connected to another system where a reference value of the speed is required. The speed is calculated internally in the encoder and is sent over the fieldbus.

- Available in model 850, 861 and 862

## Optolink transmission integrated

System for transmission of incremental encoder signals in an optical fibre can be integrated into the encoder. This is suitable for use in environments with high electromagnetic disturbances, transmission of signals over long distances (up to 1,5 km) and where galvanic insulation is required.

- Available in model 801, 803 and as a separate Optolink module (CRG Optolink)

# More than just an encoder

## ADS Uptime – more data, more control

ADS Uptime is Leine Linde's most recent advanced diagnostic system, which enables more control over both the encoder and its immediate environment, such as the motor installation. Forestall problems before they occur. Get detailed data for scanning quality, frequency, time in motion, and vibration in both radial and axial directions. ADS Uptime continuously records and stores data, and gives a warning or an alarm anytime something outside the set specifications occurs.
ADS Uptime can be used with an app on a mobile device for wireless service check-up (via Bluetooth) and/or connected via OPC-UA to the systems of your choice.

- Available in model 850, 861 and 862

## ADS Online – enables predictive maintenance

ADS Online is an advanced diagnostic system that not only monitors the encoder key functions, but also the ambient environmental parameters, such as supply voltage, vibration, and temperature. ADS Online also records and stores data, and gives a warning or an alarm anytime something outside the set specifications occurs. The encoders can be connected to an Ethernet network to provide access to diagnostics and analysis.

- Available in model 801, 803, 850, 861 and 862

## ADS Classic – built-in condition monitoring functionality

ADS Classic is the advanced diagnostic system that continuously monitors the encoder functions. If serious deviations are detected, a warning is transmitted, enabling action to be taken. This system is integrated into the encoder and is used in applications with high demands for reliability, for example, in motors for continuous operation at a paper mill.

- Available in model 801, 803, 841, 850, 861 and 862

## Overspeed – integrated programmable speed switch

Overspeed is Leine Linde's integrated programmable speed monitoring solution. It detects not only overspeed, but also underspeed, direction, and standstill, depending on how the cuser choose to program the settings. Up to four relays can be set to react at desirable levels. One and the same encoder covers the speed range 0-6000 rpm and can easily be programmed or reprogrammed via the associated PC-software. Detailed datasheets with relay settings and other information is available at www.leinelinde.com under Downloads.

- Available in model 850, 861, 862, and as a separate Overspeed module.

## ATEX/IECEx-certification for hazardous environments

Explosive atmospheres demand extraordinary encoder solutions. The model XHI 841 is available for Ex zone 1/21, with Ex db (gas) and Ex tb (dust) protection. Several models from the 800 series are also declared and available for Ex zone 2/22, with Ex ec (gas) and Ex tc (dust) protection.
The 841 encoder is certified according to the international IEC Ex standards, ATEX for the European market, CCC Ex for the Chinese market and JPEx for the Japanease market.

- Read more in the Oil & gas application brochure from Leine Linde.

IECEx JPEx

## FSI 800 series – for safe speed

FSI is Leine Linde's certified functional safety product line. The FSI800 is an safe incremental encoder equipped with either hollow or solid shafts made to be mounted on motors and to send a safe signal to the drive. The certifications are made in accordance with EN ISO 13849-1, EN 61800-5-2, IEC 61508 and EN IEC 62061. As a result, the encoders can be used in functional safety applications up to risk level SIL2 and PLd, category 3.

- Read more about functional safety products in the Functional safety brochure from Leine Linde, or search for model FSI 850 and FSI 862 in the product finder at the Leine Linde website.

# Code keys

## 850

8 5 0 - 0 9 6 -

**Flange**

0 = Euro flange B10

**Functionality**

0 = Standard
1 = ADS Classic
2 = ADS Online (only with electronics options 5, 6 or 7)
3 = Programmable overspeed (only available with connection option 4 or 5, and electronics option 5, 6, or 7)

**Shaft**

9 = Ø11 mm solid shaft with key nut

**Connection**

1 = Connector M23, 12 pin CW
2 = Connector M23, 12 pin CCW
4 = Cable gland, M20 for Ø8-11 mm cables
5 = Cable gland, M20 for Ø11-14 mm cables
3 = Pre-mounted cable, 1.5 m
9 = Pre-mounted cable, xx m

**Electronics**

1 = TTL (supply 5 Vdc, output 5 Vdc)
5 = HCHTL (supply 9-30 Vdc, output 9-30 Vdc)
6 = HTL (supply 9-30 Vdc, output 9-30 Vdc)
7 = RS422 (supply 9-30 Vdc, output 5 Vdc)
9 = Sinusoidal 1 Vpp (supply 5 Vdc, output 1 Vpp)

**Resolution**

10, 50, 100, 150, 200, 256, 300, 360, 400, 500, 512, 600, 720, 800, 900, 1000, 1024, 1200, 1250, 1800, 2000, 2048, 2400, 2500, 3072, 4000, 4096, 4800, 5000, 6350, 10000 ppr
Sinusodial 1 Vpp: 1024, 2048 ppr
Other resolutions available upon request.

# 855 Duo

8 5 5 - 0 9 9 0 - A - B

**Mechanical**

0 = Euro-flange B10

**Electrical (output A + B)**

0 = HCHTL + HTL (supply 9-30 Vdc, output 3+6 channels) *
1 = HCHTL + TTL (supply 9-30 Vdc + 5 Vdc, output 3+6 channels) *
2 = HTL + HTL (supply 9-30 Vdc, output 6+6 channels)
3 = TTL + TTL (supply 5 Vdc, output 6+6 channels)
4 = HTL + TTL (supply 9-30 + 5 Vdc, output 6+6 channels)
5 = HTL + RS422 (supply 9-30 Vdc, output 6+6 channels)
6 = HCHTL + HCHTL (supply 9-30 Vdc, output 6+6 channels) */**
7 = RS422 + RS422 (supply 9-30 Vdc, output 6+6 channels)

* Variants with HCHTL are only available with pre-mounted cable or connector (connection option 1, 2, 3 or 9)
** Only available with 2 x equal pulserate (plastic or glass)

**Shaft**

9 = Ø 11 mm solid shaft with key nut

**Connection**

1 = 2 x Connector, radial 12 pin M23 CW
2 = 2 x Connector, radial 12 pin M23 CCW
4 = 2 x M20 cable gland, for cable Ø8-11 mm
5 = 2 x M20 cable gland, for cable Ø11-14 mm
3 = 2 x Cable (PVC), radial 1,5 m
9 = 2 x Cable (PVC), radial free length xx m

**Code disc**

0 = Check the list below to see which pulse rates are avalable.

**Pulse rates**

**2 x equal pulse rate**

500, 600, 1000, 1024, 2000, 2048, 2500, 3072, 4096, 5000, 6000, 6350, 8192, 10000, 1500, 50, 60, 400, 600, 750, 900, 1200, 1250, 1800, 3000, 3750, 4000

**Odd pulse rate**

1024-500, 1024-600, 1024-2000, 1024-2048, 1024-4096, 1024-6350, 1024-10000, 2048-6000, 2048-8192, 100-2048, 24-2048, 1024-15, 1024-50, 5000-1024, 5000-2048, 500-360, 1024-150, 1024-30, 1024-300, 1024-512, 2048-150, 2048-2, 2048-200, 2048-300, 2048-500, 2048-512, 4096-2048, 2048-500, 5000-300, 2048-2500

# 801

8 0 1 - ☐☐☐☐☐☐ - ☐☐☐☐

### Shaft

2 = Hollow shaft 12 mm with insulation up to 2,5 kV
6 = Hollow shaft 12 mm with keyway with insulation up to 2,5 kV
7 = Hollow shaft 16 mm with insulation up to 2,5 kV
0 = Hollow shaft 17 mm taper with insulation up to 2,5 kV

### Flange

1 = Torque bracket 120°
2 = Torque bracket 315°

### Output

1 = HCHTL (supply 9-30 Vdc, output 9-30 Vdc)
2 = HTL (supply 9-30 Vdc, output 9-30 Vdc)
5 = RS422 (supply 9-30 Vdc, output 5 Vdc)
7 = TTL (supply 5 Vdc, output 5 Vdc)
9 = 1 Vpp (supply 9-30 Vdc)
0 = 1 Vpp (supply 5 Vdc)

### Connection

1 = M20 cable gland 8-11mm (not for model with Optolink)
2 = Pre-mounted cable xx m (not for model with Optolink)
4 = M23 connector 12 pin

### Connection direction

1 = Radial
2 = Adjustable (not for models with Optolink)

### Functionality

1 = Standard
2 = Overvoltage protected
3 = ADS Classic (not available with 1 Vpp)
4 = ADS Classic overvoltage protected (not available with 1 Vpp)
5 = ADS Online (not available with TTL or 1 Vpp)
6 = ADS Online overvoltage protected (not available with TTL or 1 Vpp)
7 = Optolink
8 = Optolink overvoltage protected

### Resolution

500, 1000, 1024, 2048, 2500, 3072, 4096, 5000, 8192, 10000 ppr
1 Vpp: 1024, 2048 ppr
Other resolutions available upon request.

# 803

8 0 3 - ☐☐☐☐☐☐ - ☐☐☐☐

### Shaft

2 = Hollow shaft 12 mm with insulation
7 = Hollow shaft 16 mm with insulation
8 = Through-going hollow shaft 25 mm with insulation
9 = Through-going hollow shaft 1 inch with insulation

### Flange

1 = Torque bracket 120°
2 = Torque bracket 315°

### Output

1 = HCHTL (supply 9-30 Vdc, output 9-30 Vdc)
2 = HTL (supply 9-30 Vdc, output 9-30 Vdc)
5 = RS422 (supply 9-30 Vdc, output 5 Vdc)
7 = TTL (supply 5 Vdc, output 5 Vdc)
9 = 1 Vpp (supply 9-30 Vdc)
0 = 1 Vpp (supply 5 Vdc)

### Connection

1 = M20 cable gland 8-11mm (not for model with Optolink)
2 = Pre-mounted cable xx m (not for model with Optolink)
4 = M23 connector 12 pin

### Connection direction

1 = Radial
2 = Adjustable (not for models with Optolink)

### Functionality

1 = Standard
2 = Overvoltage protected
3 = ADS Classic (not available with 1Vpp)
4 = ADS Classic overvoltage protected (not available with 1 Vpp)
5 = ADS Online (not available with TTL or 1Vpp)
6 = ADS Online overvoltage protected (not available with TTL or 1 Vpp)
7 = Optolink
8 = Optolink overvoltage protected

### Resolution

500, 1000, 1024, 2048, 2500, 3072, 4096, 5000, 8192, 10000 ppr
1 Vpp: 1024, 2048 ppr
Other resolutions available upon request.

# 861

8 6 1 - ☐☐☐☐☐☐ - ☐☐☐☐

### Flange

0 = Standard
1 = Torque bracket 120°

### Functionality

0 = Standard
1 = ADS Classic
2 = ADS Online (only with electronics options 5, 6, or 7)
3 = Programmable overspeed (only available with connection option 4 or 5, electronics option 5, 6, or 7, and 6 channels)

### Shaft

7 = Ø12 mm hollow shaft with insulation
8 = Ø16 mm hollow shaft with insulation

### Connection

1 = Connector M23, 12 pin CW
2 = Connector M23, 12 pin CCW
4 = Cable gland, M20 for Ø8-11 mm cables
5 = Cable gland, M20 for Ø11-14 mm cables
3 = Pre-mounted cable, 1.5 m
9 = Pre-mounted cable, xx m

### Electronics

1 = TTL (supply 5 Vdc, output 5 Vdc)
5 = HCHTL (supply 9-30 Vdc, output 9-30 Vdc)
6 = HTL (supply 9-30 Vdc, output 9-30 Vdc)
7 = RS422 (supply 9-30 Vdc, output 5 Vdc)
9 = Sinusoidal 1 Vpp (supply 5 Vdc, output 1 Vpp)

### Number of channels

5 = 3 channels (only for HCHTL)
6 = 6 channels

### Resolution

10, 50, 100, 150, 200, 256, 300, 360, 400, 500, 512, 600, 720, 800, 900, 1000, 1024, 1200, 1250, 1800, 2000, 2048, 2400, 2500, 3072, 4000, 4096, 4800, 5000, 6350, 10000 ppr
Sinusodial 1 Vpp: 1024, 2048 ppr
Other resolutions available upon request.

# 862

8 6 2 - [ ] 0 [ ] [ ] [ ] [ ] - [ ] [ ] [ ] [ ]

### Flange

0 = Standard
1 = Torque bracket 120°
2 = Torque bracket 330°

### Shaft

7 = Ø12 mm hollow shaft with insulation up to 2.5 kV
8 = Ø16 mm hollow shaft with insulation up to 2.5 kV
9 = Ø17 mm taper hollow shaft with insulation up to 2.5 kV

### Connection

1 = Connector M23, 12 pin CW
2 = Connector M23, 12 pin CCW
4 = Cable gland, M20 for Ø8-11 mm cables
5 = Cable gland, M20 for Ø11-14 mm cables
3 = Pre-mounted cable, 1.5 m
9 = Pre-mounted cable, xx m

### Electronics

1 = TTL (supply 5 Vdc, output 5 Vdc)
2 = Overvoltage protected HCHTL (supply 9-30 Vdc, output 9-30 Vdc)
3 = Overvoltage protected HTL (supply 9-30 Vdc, output 9-30 Vdc)
5 = HCHTL (supply 9-30 Vdc, output 9-30 Vdc)
6 = HTL (supply 9-30 Vdc, output 9-30 Vdc)
7 = RS422 (supply 9-30 Vdc, output 5 Vdc)
9 = Sinusoidal 1 Vpp (supply 5 Vdc, output 1 Vpp)

### Functionality

4 = Standard, output with 3 channels (only for HCHTL)
5 = ADS Classic, output with 3 channels (only for HCHTL)
6 = Standard, output with 6 channels
7 = ADS Classic, output with 6 channels
8 = 3 channels with ADS Online (only for electronics option 5)
9 = 6 channels with ADS Online (only for electronics option 5, 6, and 7)
1 = 6 channels programmable overspeed (only available with connection option 4 or 5, and electronics option 5, 6, and 7)

### Resolution

10, 50, 100, 150, 200, 256, 300, 360, 400, 500, 512, 600, 720, 800, 900, 1000, 1024, 1200, 1250, 1800, 2000, 2048, 2400, 2500, 3072, 4000, 4096, 4800, 5000, 6350, 10000 ppr
Sinusodial 1 Vpp: 1024, 2048 ppr
Other resolutions available upon request.

# 865 Duo

8 6 5 - □ □ □ □ 9 0 - □ □ □ □ - □ □ □ □

A B

**Mechanical**

0 = Standard
1 = Torque bracket 135°

**Electrical (output A + B)**

0 = HCHTL + HTL (supply 9-30 Vdc, output 3+6 channels) *
1 = HCHTL + TTL (supply 9-30 Vdc + 5 Vdc, output 3+6 channels) *
2 = HTL + HTL (supply 9-30 Vdc, output 6+6 channels)
3 = TTL + TTL (supply 5 Vdc, output 6+6 channels)
4 = HTL + TTL (supply 9-30 + 5 Vdc, output 6+6 channels)
5 = HTL + RS422 (supply 9-30 Vdc, output 6+6 channels)
6 = HCHTL + HCHTL (supply 9-30 Vdc, output 6+6 channels) */**
7 = RS422 + RS422 (supply 9-30 Vdc, output 6+6 channels)

* Variants with HCHTL are only available with pre-mounted cable or connector (connection option 1, 2, 3 or 9)
** Only available with 2 x equal pulserate (plastic or glass)

**Shaft**

4 = Ø 12 mm, Insulated, Ceramic bearings
5 = Ø 16 mm, Insulated, Ceramic bearings
6 = Ø 17 mm taper shaft, Insulated, Ceramic bearings
7 = Ø 12 mm, bushing Insulated, steel bearings
8 = Ø 16 mm, bushing insulated, steel bearings

**Connection**

1 = 2 x Connector, radial 12 pin M23 CW
2 = 2 x Connector, radial 12 pin M23 CCW
4 = 2 x M20 cable gland, for cable Ø8-11 mm
5 = 2 x M20 cable gland, for cable Ø11-14 mm
3 = 2 x Cable (PVC), radial 1,5 m
9 = 2 x Cable (PVC), radial free length xx m

**Code disc**

0 = Check the list below to see which pulse rates are avalable.

**Pulse rates**

**2 x equal pulse rate**

500, 600, 1000, 1024, 2000, 2048, 2500, 3072, 4096, 5000, 6000, 6350, 8192, 10000, 1500, 50, 60, 400, 600, 750, 900, 1200, 1250, 1800, 3000, 3750, 4000

**Odd pulse rate**

1024-500, 1024-600, 1024-2000, 1024-2048, 1024-4096, 1024-6350, 1024-10000, 2048-6000, 2048-8192, 100-2048, 24-2048, 1024-15, 1024-50, 5000-1024, 5000-2048, 500-360, 1024-150, 1024-30, 1024-300, 1024-512, 2048-150, '2048-2, 2048-200, 2048-300, 2048-500, 2048-512, 4096-2048, 2048-500, 5000-300, 2048-2500

# 841, Ex

8 4 1 - ☐☐☐☐☐☐ - ☐☐☐☐☐

**Ex classes**

0 = Tamb= -40°C..+40°C, RPMmax = 4200 (T6)
1 = Tamb= -40°C..+60°C, RPMmax = 4200 (T5)
2 = Tamb= -40°C..+70°C, RPMmax = 1500 (T5)
3 = Tamb= -40°C..+70°C, RPMmax = 6000 (T4)

**Flange**

0 = Standard
1 = Torque bracket 120°

**Shaft**

12 = Ø12 mm hollow shaft
16 = Ø16 mm hollow shaft

**Electronics**

5 = HCHTL (supply 9-30 Vdc, output 9-30 Vdc)

**Functionality**

4 = Standard, output with 3 channels
5 = Standard, output with 6 channels
6 = ADS Classic, output with 6 channels

**Resolution**

XXXXX ppr

| Accessories for Ex use | Part number |
|---|---|
| Ex-rated cable gland | 1113061-01 |
| Cable | 1322311-xx |
| Torque arm M6 | 1254632-xx |

# 850, FSI

FSI 8 5 0 [ ] [ ] [ ] 5 6 0 - [ ] [ ] [ ] [ ]

**Flange**

0 = Euro flange B10

**Shaft**

9 = Ø11 mm solid shaft with key nut

**Connection**

1 = Connector M23, 12 pin CW
2 = Connector M23, 12 pin CCW
4 = Cable gland M20 for Ø8-11 mm cables
5 = Cable gland M20 for Ø11-14 mm cables
9 = Pre-mounted cable XX m

**Electronics**

5 = HCHTL (supply 9-30 Vdc, output 9-30 Vdc)

**Number of channels**

6 = 6 channels

**Resolution**

1024, 2048 ppr
Other resolutions between 500-5000 ppr on request.

# 862, FSI

FSI 8 6 2 [ ] [ ] [ ] 5 6 0 - [ ] [ ] [ ] [ ]

**Flange**

0 = Standard
1 = Torque bracket 120°
2 = Torque bracket 330°

**Shaft**

7 = Ø12 mm blind hollow shaft with key way
8 = Ø16 mm blind hollow shaft with key

**Connection**

1 = Connector M23, 12 pin CW
2 = Connector M23, 12 pin CCW
4 = Cable gland M20 for Ø8-11 mm cables
5 = Cable gland M20 for Ø11-14 mm cables
9 = Pre-mounted cable XX m

**Electronics**

5 = HCHTL (supply 9-30 Vdc, output 9-30 Vdc)

**Number of channels**

6 = 6 channels

**Resolution**

1024, 2048 ppr
Other resolutions between 500-5000 ppr available upon request.

# Performance

## **Technical data example** (based on model XHI 862 with HCHTL interface)

| | |
|---|---|
| Operating temperature | -20..+80 °C * |
| Ingress protection class [IEC 60529] | IP67 (IP66 at shaft inlet) |
| Vibration [IEC 60068-2-64] | < 20g, 55-2000 Hz |
| Shock [IEC 60068227] | ≤ 400g, 3.5 ms |
| Cover material | Aluminium (coated or anodized) |
| Weight | Approx. 1300 g |
| Shaft load (axial/radial) | 500 N / 1200 N |
| Rotational speed max | 6000 rpm |
| Shaft material | Stainless steel |
| Short circuit protected | Yes |
| Polarity protected | Yes |
| Current consumption | 60 mA at 24 Vdc (max. 80 mA) |
| Output load | ± 40 mA |
| Output frequency max | 200 kHz |
| Cable length max | 350 m at 100 kHz |
| Channel separation | 90° el ± 25° el |
| Dividing error | ± 50° el |

* Available variants up to -40..+100 °C

## Accessories

| **Mounting accessories** | **Part number** |
|---|---|
| Torque arm M6 | 1254632-xx |
| Torque arm M5 | 1254627-xx |
| Shaft coupling 11-11 mm with keyway | 46441P33P33 |
| Foot mount (for model 850) | 1243062-01 |
| Mating connector M23 (CCW pin layout for CW encoder connector) | 1283668-02 |
| **Gateways and modules** | **Part number** |
| Overspeed module, programmable, 0-6000 rpm | 1088408-01 |
| Speed monitor DZ260 | 1322928-01 |
| CRG OptoLink Transmitter, 9-30 Vdc supply, HTL input | 1202387-01 |
| CRG OptoLink Receiver, 9-30 Vdc supply, HTL output | 1202450-01 |
| CRG OptoLink Receiver, 9-30 Vdc supply, RS422 output | 1203454-01 |
| DMI Converter, HTL or RS422 input, RS422 and/or HTL output signals | 1110494-01 |
| CRG Optolink Receiver, 9-30 Vdc supply, HTL output, pre-mounted 1,5m cable | 1310430-01 |

# Contact us


**SWEDEN / HEAD OFFICE**
T +46-(0)152-265 00
F +46-(0)152-265 05
info@leinelinde.com

**BRAZIL**
T +55-19-3291-8425
F +55-19-3367-5658
info@leinelinde.com.br

**FINLAND**
T +358-(0)9-561 72 00
F +358-(0)9-561 72 020
info@leinelinde.fi

**ITALY**
T +39-039-596 01 08
F +39-039-971 22 08
info@leinelinde-ltn.it

**CHINA**
T +86-(021)-525 835 66
F +86-(021)-525 835 99
info@leinelinde.cn

**GERMANY**
T +49-(0)40-3176758-60
F +49-(0)40-3176758-65
info@leinelinde.de

**SOUTH KOREA**
T +82-(0)51-746 5420
F +82-(0)51-746 5421
info@leinelinde.co.kr

**DENMARK**
T +45-862-308 34
info@leinelinde.dk

**INDIA**
T +91-11-2617 2504
F +91-11-2616 5449
info@leinelinde.in

**SPAIN**
T +34-93-574 23 02
F +34-93-560 57 60
info@leinelinde.es


Leine Linde's worldwide presence. Read more at www.leinelinde.com.

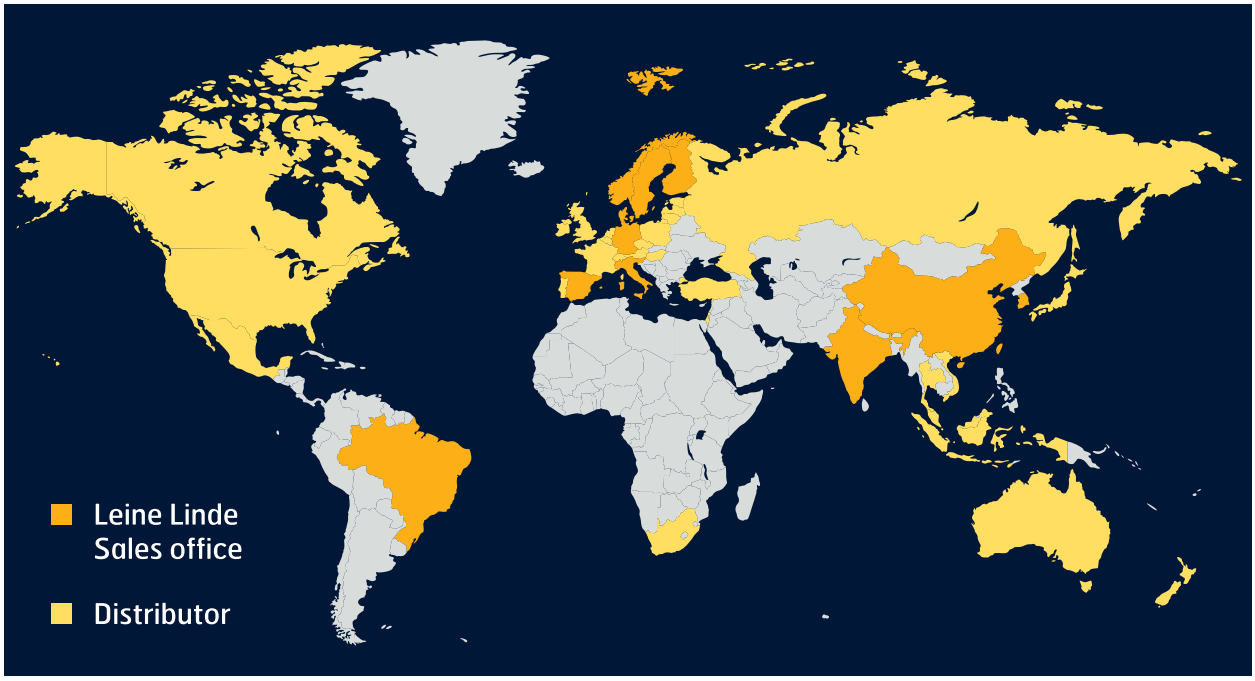

The best encoders and sensors are those you never have to think about. Those that simply do their job – year after year. Leine Linde develops and manufactures customized encoder and sensor solutions for demanding environments, advanced measuring systems for accurate feedback of speed, position or strain.

LEINE LINDE

+46-(0)152-26500 www.leinelinde.com

Part no. 1034793-02, ver. 11

Automation and Metrology International, LLC
1-888-354-2525
auto-met.com