HEIDENHAIN



Encoders for Servo Drives

November 2013

Automation and Metrology International, LLC
8808 Tyler Blvd, Mentor, OH 44060
1-888-354-2525 | sales@auto-met.com
Request a quote: auto-met.com

This catalog is not intended as an overview of the HEIDENHAIN product program. Rather it presents a selection of **encoders for use on servo drives.**

In the **selection tables** you will find an overview of all HEIDENHAIN encoders for use on electric drives and the most important specifications. The descriptions of the **technical features** contain fundamental information on the use of rotary, angular, and linear encoders on electric drives.

The **mounting information** and the detailed **specifications** refer to the **rotary encoders** developed specifically for drive technology. Other rotary encoders are described in separate product catalogs.

You will find more detailed information on the **linear and angular encoders** listed in the selection tables, such as mounting information, specifications and dimensions in the respective **product catalogs.**



Brochure
Rotary Encoders



Product Overview
Rotary Encoders for the Elevator Industry



Brochure
Angle Encoders with Integral Bearing



Product Overview
Rotary Encoders for Potentially Explosive Atmospheres



Brochure
Angle Encoders without Integral Bearing



Brochure
Modular Magnetic Encoders



Brochure
Linear Encoders
For Numerically Controlled Machine Tools



Brochure
Exposed Linear Encoders

Comprehensive descriptions of all available interfaces as well as general electrical information is included in the *Interfaces for HEIDENHAIN Encoders* brochure, ID 1078628-xx.

This catalog supersedes all previous editions, which thereby become invalid. The basis for ordering from HEIDENHAIN is always the catalog edition valid when the contract is made.

Standards (ISO, EN, etc.) apply only where explicitly stated in the catalog.

Contents

Overview			
	Explanation of the selection tables		6
	Rotary encoders for integration in motors		8
	Rotary encoders for mounting on motors		10
	Rotary encoders and angle encoders for integrated and hollow-shaft motors		14
	Linear encoders for linear drives		16
Technical features and mounting information			
	Rotary encoders and angle encoders for three-phase AC and DC motors		20
	Linear encoders for linear drives		22
	Safety-related position measuring systems		24
	Measuring principles		26
	Measuring accuracy		29
	Mechanical designs, mounting and accessories		32
	General mechanical information		39
Specifications			
	Rotary encoders with integral bearing	**ECN/EQN 1100 series**	44
		ERN 1023	46
		ERN 1123	48
		ECN/EQN 1300 series	50
		ECN/EQN 400 series	52
		ERN 1300 series	54
		EQN/ERN 400 series	56
		ERN 401 series	58
	Rotary encoders without integral bearing	**ECI/EQI 1100 series**	60
		ECI 1118	62
		EBI 1135	64
		ECI/EQI 1300 series EnDat01	66
		ECI/EQI 1300 series EnDat22	68
		ECI/EBI 100 series	70
		ERO 1200 series	72
		ERO 1400 series	74
Electrical connection			
	Interfaces		76
	Cables and connecting elements		87
	Diagnostic and testing equipment		92
	Evaluation electronics		94

Encoders for servo drives

Controlling systems for servo drives require measuring systems that provide feedback for the position and speed controllers and for electronic commutation.

The properties of encoders have decisive influence on important motor qualities such as:

- Positioning accuracy
- Speed stability
- Bandwidth, which determines drive command-signal response and disturbance rejection capability
- Power loss
- Size
- Noise emission
- Safety

Digital position and speed control

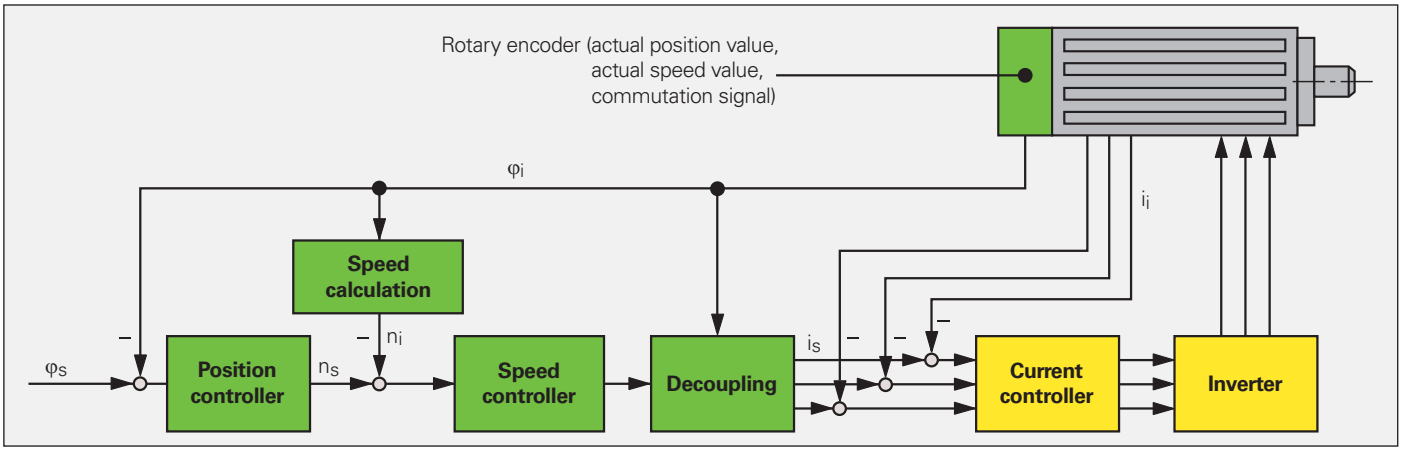

HEIDENHAIN offers the appropriate solution for any of a wide range of applications using both rotary and linear motors:

- Incremental rotary encoders with and without commutation tracks, absolute rotary encoders
- Incremental and absolute angle encoders
- Incremental and absolute linear encoders
- Incremental modular encoders



Rotary encoder

All the HEIDENHAIN encoders shown in this catalog involve very little cost and effort for the motor manufacturer to mount and wire. Encoders for rotary motors are of short overall length. Some encoders, due to their special design, can perform functions otherwise handled by safety devices such as limit switches.

Motors for "digital" drive systems
(digital position and speed control)

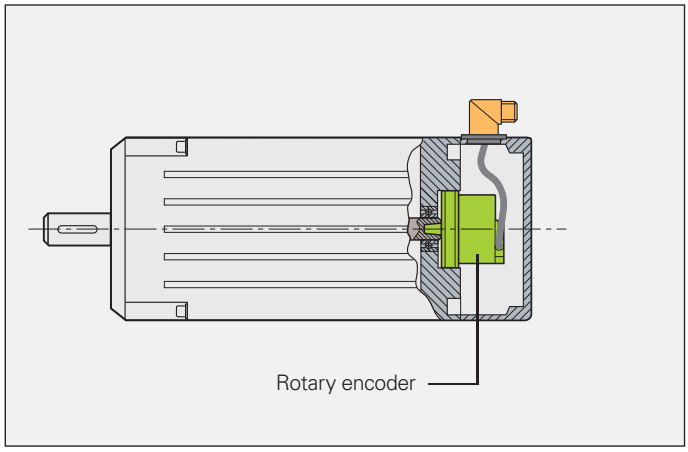



Linear encoders

Angle encoders



Explanation of the selection tables

The tables on the following pages list the encoders suited for individual motor designs. The encoders are available with dimensions and output signals to fit specific types of motors (DC or AC).

Rotary encoders for mounting on motors
Rotary encoders for motors with forced ventilation are either built onto the motor housing or integrated. As a result, they are frequently exposed to the unfiltered forced-air stream of the motor and must have a high degree of protection, such as IP 64 or better. The permissible operating temperature seldom exceeds 100 °C.

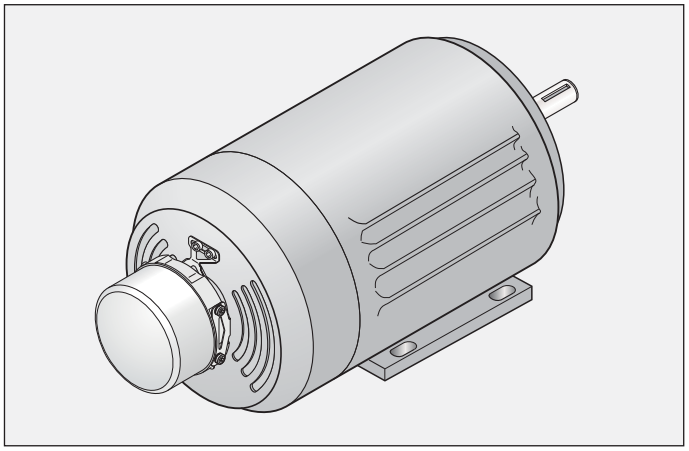

In the selection table you will find:
- Rotary encoders with mounted **stator couplings** with high natural frequency—virtually eliminating any limits on the bandwidth of the drive
- Rotary encoders for **separate shaft couplings,** which are particularly suited for **insulated mounting**
- Incremental rotary encoders with high quality **sinusoidal output signals** for digital speed control
- Absolute rotary encoders with purely digital data transfer or complementary sinusoidal incremental signals
- Incremental rotary encoders with **TTL or HTL compatible output signals**
- Information on rotary encoders that are available as safety-related position encoders under the designation **Functional Safety**.

For selection table see page 10

Rotary encoders for integration in motors
For motors without separate ventilation, the rotary encoder is built into the motor housing. This configuration places no stringent requirements on the encoder for a high degree of protection. The operating temperature within the motor housing, however, can reach 100 °C and higher.

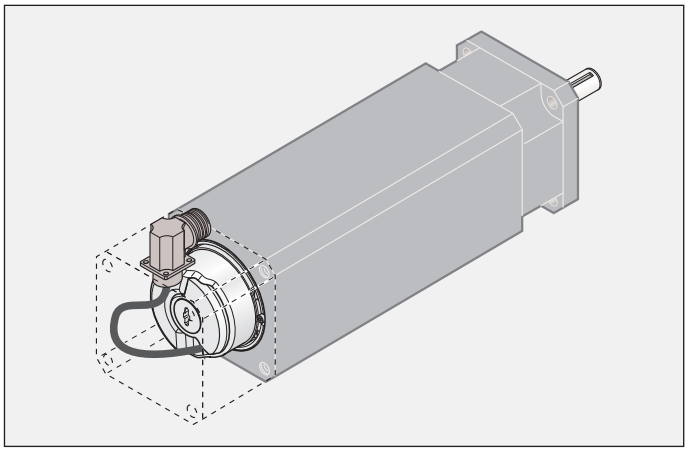

In the selection table you will find
- Incremental rotary encoders for **operating temperatures** up to 120 °C, and absolute rotary encoders for operating temperatures up to 115 °C
- Rotary encoders with mounted **stator couplings** with high natural frequency—virtually eliminating any limits on the bandwidth of the drive
- Incremental rotary encoders for digital speed control with **sinusoidal output signals** of high quality—even at high operating temperatures
- Absolute rotary encoders **with purely digital data transfer** or complementary sinusoidal incremental signals
- Incremental rotary encoders with additional **commutation signal** for synchronous motors
- Incremental rotary encoders with **TTL-compatible output signals**
- Information on rotary encoders that are available as safety-related position encoders under the designation **Functional Safety**.

For selection table see page 8

Rotary encoders, modular rotary encoders and angle encoders for integrated and hollow-shaft motors
Rotary encoders and angle encoders for these motors have **hollow through shafts** in order to allow supply lines, for example, to be conducted through the motor shaft—and therefore through the encoder. Depending on the conditions of the application, the encoders must either feature IP 66 protection or—for example with modular encoders using optical scanning—the machine must be designed to protect them from contamination.

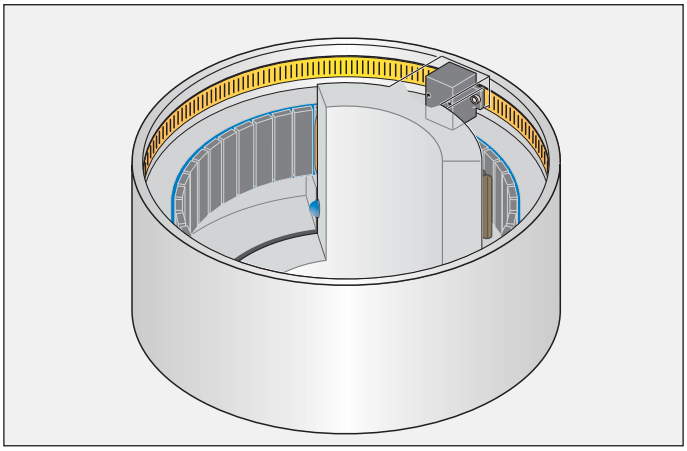

In the selection table you will find
- Angle encoders and modular encoders with the measuring standard on a steel drum for **shaft speeds up to 42 000 min^{-1}**
- Encoders with integral bearing, with stator coupling or modular design
- Encoders with high quality **absolute and/or incremental output signals**
- Encoders with **good acceleration performance** for a broad bandwidth in the control loop

For selection table see page 14

Linear encoders for linear motors
Linear encoders on linear motors supply the actual value both for the position controller and the velocity controller. They therefore form the basis for the servo characteristics of a linear drive. The linear encoders recommended for this application:
- Have low position deviation during acceleration in the measuring direction
- Have high tolerance to acceleration and vibration in the lateral direction
- Are designed for high velocities
- Provide absolute position information with purely digital data transmission or high-quality sinusoidal incremental signals

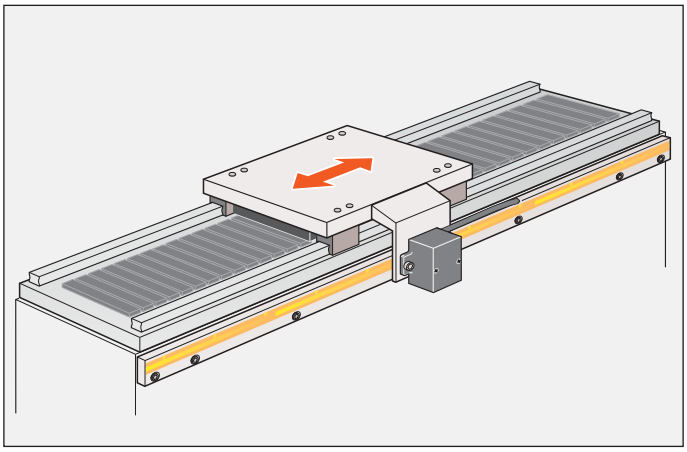

Exposed linear encoders are characterized by:
- Higher accuracy grades
- Higher traversing speeds
- Contact-free scanning, i.e., no friction between scanning head and scale

Exposed linear encoders are suited for applications in clean environments, for example on measuring machines or production equipment in the semiconductor industry.

For selection table see page 16

Sealed linear encoders are characterized by:
- A high degree of protection
- Simple installation

Sealed linear encoders are therefore ideal for applications in environments with airborne liquids and particles, such as on machine tools.

For selection table see page 18

Selection guide

Rotary encoders for integration in motors

Protection: up to IP 40 (EN 60529)

Series	Overall dimensions	Mechanically permissible speed	Natural freq. of stator connection	Maximum operating temperature	Voltage supply
Rotary encoders with integral bearing and mounted stator coupling					
ECN/EQN/ ERN 1100	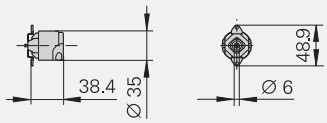	≤ 12000 min^{-1}	≥ 1000 Hz	115 °C	3.6 V to 14 V DC
	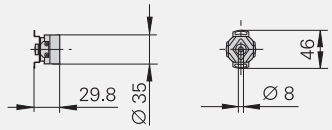	≤ 6000 min^{-1}	≥ 1600 Hz	90 °C	
ECN/EQN/ ERN 1300	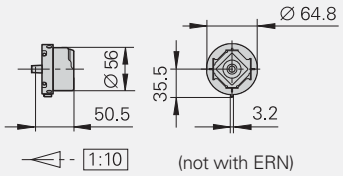	≤ 15000 min^{-1}/ ≤ 12000 min^{-1}	≥ 1800 Hz	115 °C	3.6 V to 14 V DC
		≤ 15000 min^{-1}		120 °C *ERN 1381/4096:* 80 °C	5 V DC ± 0.5 V
					5 V DC ± 0.25 V
					5 V DC ± 0.5 V
					5 V DC ± 0.25 V
Rotary encoders without integral bearing					
ECI/EQI 1100	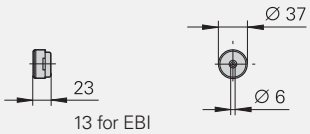	≤ 15000 min^{-1}/ ≤ 12000 min^{-1}	–	115 °C	5 V DC ± 0.25 V
					3.6 V to 14 V DC
EBI 1100					
ECI/EQI 1300	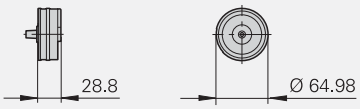	≤ 15000 min^{-1}/ ≤ 12000 min^{-1}	–	115 °C	4.75 V to 10 V DC
	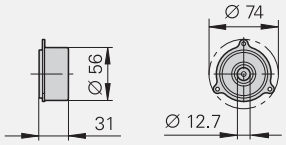				3.6 V to 14 V DC
ECI 100	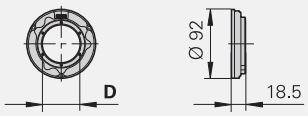	≤ 6000 min^{-1}	–	115 °C	3.6 V to 14 V DC
EBI 100					
ERO 1200	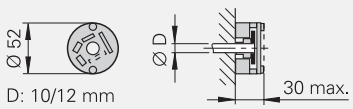	≤ 25000 min^{-1}	–	100 °C	5 V DC ± 0.5 V
ERO 1400	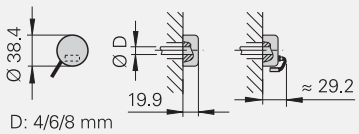	≤ 30000 min^{-1}	–	70 °C	5 V DC ± 0.5 V
					5 V DC ± 0.25 V
					5 V DC ± 0.5 V

[1] **Functional Safety** upon request [2] after internal 5/10/20/25-fold interpolation

	Signal periods per revolution	Positions per revolution	Distinguishable revolutions	Interface	Model	More information
	512	8192 (13 bits)	–/4096	EnDat 2.2 / 01 with ~ 1 V_{PP}	**ECN 1113 / EQN 1125**	**Page 44**
	–	8388608 (23 bits)		EnDat 2.2/22	**ECN 1123/EQN 1135**[1]	
	500 to 8192	3 block commutation signals		⊓⊔ TTL	**ERN 1123**	**Page 48**
	512/2048	8192 (13 bits)	–/4096	EnDat 2.2 / 01 with ~ 1 V_{PP}	**ECN 1313/EQN 1325**	**Page 50**
	–	33554432 (25 bits)		EnDat 2.2/22	**ECN 1325/EQN 1337**[1]	
	1024/2048/4096	–		⊓⊔ TTL	**ERN 1321**	**Page 54**
		3 block commutation signals			**ERN 1326**	
	512/2048/4096	–		~ 1 V_{PP}	**ERN 1381**	
	2048	Z1 track for sine commutation			**ERN 1387**	
	16	262144 (18 bits)	–/4096	EnDat 2.1 / 01 with ~ 1 V_{PP}	**ECI 1118/EQI 1130**	**Page 60**
	–			EnDat 2.1 / 21		
			–	EnDat 2.2 / 22	**ECI 1118**	**Page 62**
			65536[3]	EnDat 2.2/22	**EBI 1135**	**Page 64**
	32	524288 (19 bits)	–/ 4096	EnDat 2.2 / 01 with ~ 1 V_{PP}	**ECI 1319/EQI 1331**[1]	**Page 66**
	–			EnDat 2.2/22		**Page 68**
	32	524288 (19 bits)	–	EnDat 2.1 / 01 with ~ 1 V_{PP}	**ECI 119**	**Page 70**
	–			EnDat 2.2/22		
			65536[3]	EnDat 2.2/22	**EBI 135**	
	1024/2048	–		⊓⊔ TTL	**ERO 1225**	**Page 72**
				~ 1 V_{PP}	**ERO 1285**	
	512/1000/1024	–		⊓⊔ TTL	**ERO 1420**	**Page 74**
	5000 to 37500[2]			⊓⊔ TTL	**ERO 1470**	
	512/1000/1024			~ 1 V_{PP}	**ERO 1480**	

[3] Multiturn function via battery-buffered revolution counter

Rotary encoders for mounting on motors

Protection: up to IP 64 (EN 60529)

Series	Overall dimensions	Mechanically permissible speed	Natural freq. of stator connection	Maximum operating temperature	Voltage supply
Rotary encoders with integral bearing and mounted stator coupling					
ECN/ERN 100	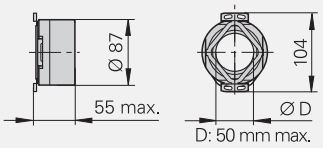	*D ≤ 30 mm:* ≤ 6000 min^{-1} *D > 30 mm:* ≤ 4000 min^{-1}	≥ 1100 Hz	100 °C	5 V DC ± 0.25 V
					3.6 V to 5.25 V DC
					5 V DC ± 0.5 V
				85 °C	10 V to 30 V DC
ECN/EQN/ERN 400	**Stator coupling** 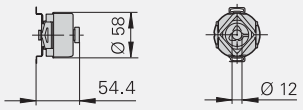 **Universal stator coupling** 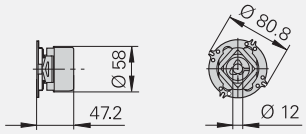	≤ 6000 min^{-1} *With two shaft clamps (only for hollow through shaft):* ≤ 12000 min^{-1}	*Stator coupling:* ≥ 1500 Hz *Universal stator coupling:* ≥ 1400 Hz	100 °C	3.6 V to 14 V DC
					5 V DC ± 0.5 V
					10 V to 30 V DC
				70 °C	
				100 °C	5 V DC ± 0.5 V
ECN/EQN/ERN 400	**Expanding ring coupling** 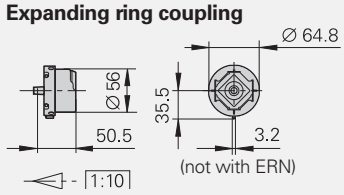 **Plane-surface coupling** 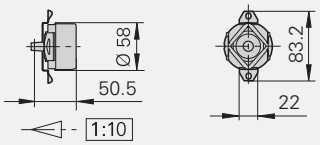	≤ 15000 min^{-1}/ ≤ 12000 min^{-1}	*Expanding ring coupling:* ≥ 1800 Hz *Plane-surface coupling:* ≥ 400 Hz	100 °C	3.6 V to 14 V DC
		≤ 15000 min^{-1}			5 V DC ± 0.5 V
					5 V DC ± 0.25 V
ECN/EQN/ERN 1000	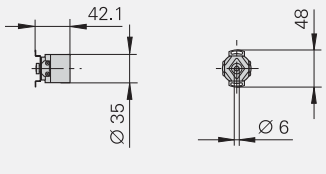 ERN 1023 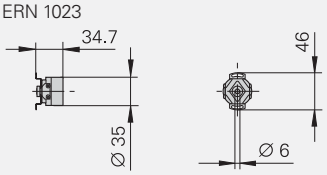	≤ 12000 min^{-1}	≥ 1500 Hz	100 °C	3.6 V to 14 V DC
					5 V DC ± 0.5 V
				70 °C	10 V to 30 V DC
					5 V DC ± 0.25 V
				100 °C	5 V DC ± 0.5 V
		≤ 6000 min^{-1}	≥ 1600 Hz	90 °C	

[1] **Functional Safety** upon request [2] after internal 5/10/20/25-fold interpolation

	Signal periods per revolution	Positions per revolution	Distinguishable revolutions	Interface	Model	More information
	2048	8192 (13 bits)	–	EnDat 2.2 / 01 with ∿ 1 V_{PP}	**ECN 113**	**Catalog: *Rotary Encoders***
	–	33554432 (25 bits)		EnDat 2.2/22	**ECN 125**	
	1000 to 5000	–		⊓⊔TTL/∿ 1 V_{PP}	**ERN 120/ERN 180**	
				⊓⊔ HTL	**ERN 130**	
	512, 2048	8192 (13 bits)	–/4096	EnDat 2.2 / 01 ∿ 1 V_{PP}	**ECN 413/EQN 425**	
	–	33554432 (25 bits)		EnDat 2.2/22	**ECN 425/EQN 437**	
	250 to 5000	–		⊓⊔TTL	**ERN 420**	
				⊓⊔ HTL	**ERN 430**	
				⊓⊔TTL	**ERN 460**	
	1000 to 5000			∿ 1 V_{PP}	**ERN 480**	
	2048	8192 (13 bits)	–/4096	EnDat 2.2 / 01 with ∿ 1 V_{PP}	**ECN 413/EQN 425**	**Page 52**
	–	33554432 (25 bits)		EnDat 2.2/22	**ECN 425/EQN 437**[1]	
	1024 to 5000	–		⊓⊔TTL	**ERN 421**	**Product Information**
	2048	Z1 track for sine commutation			**ERN 487**	
	512	8192 (13 bits)	–/4096	EnDat 2.2 / 01 with ∿ 1 V_{PP}	**ECN 1013/EQN 1025**	**Catalog: *Rotary Encoders***
	–	8388608 (23 bits)		EnDat 2.2/22	**ECN 1023/EQN 1035**	
	100 to 3600	–		⊓⊔TTL/∿ 1 V_{PP}	**ERN 1020/ERN 1080**	
				⊓⊔ HTLs	**ERN 1030**	
	5000 to 36000[2]			⊓⊔TTL	**ERN 1070**	
	512, 2048	Z1 track for sine commutation		∿ 1 V_{PP}	**ERN 1085**	**Product Information**
	500 to 8192	3 block commutation signals		⊓⊔TTL	**ERN 1023**	**Page 46**

Rotary encoders for mounting on motors

Protection: up to IP 64 (EN 60529)

Series	Overall dimensions	Mechanically permissible speed	Natural freq. of stator connection	Maximum operating temperature	Voltage supply
Rotary encoders with integral bearing and torque supports for Siemens drives					
EQN/ERN 400	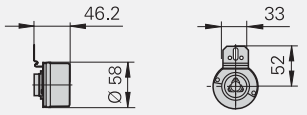	≤ 6000 min^{-1}		100 °C	3.6 V ± 14 V DC 10 V to 30 V DC 5 V DC ± 0.5 V 10 V to 30 V DC
ERN 401	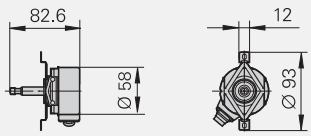	≤ 6000 min^{-1}		100 °C	5 V DC ± 0.5 V 10 V to 30 V DC
Rotary encoders with integral bearing for separate shaft coupling					
ROC/ROQ/ROD 400 RIC/RIQ	**Synchro flange** 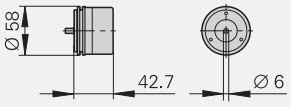 **Clamping flange** 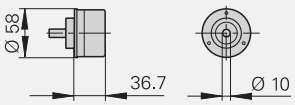	≤ 12000 min^{-1} ≤ 16000 min^{-1}	–	100 °C 70 °C 100 °C	3.6 V to 14 V DC 5 V DC ± 0.5 V 10 V to 30 V DC 5 V DC ± 0.5 V
ROC/ROQ/ROD 1000	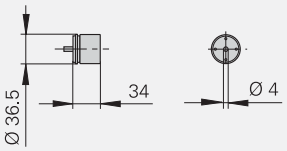	≤ 12000 min^{-1}	–	100 °C 70 °C	3.6 V to 14 V DC 5 V DC ± 0.5 V 10 V to 30 V DC 5 V DC ± 0.25 V
ROD 1900	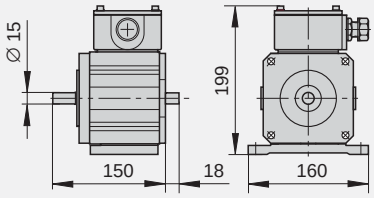	≤ 4000 min^{-1}	–	70 °C	10 V to 30 V DC

[1] **Functional Safety** upon request
[2] After integral 5/10-fold interpolation

	Signal periods per revolution	Positions per revolution	Distinguishable revolutions	Interface	Model	More information
	2048	8192 (13 bits)	4096	EnDat 2.1 / 01 with ∿ 1 V_{PP}	**EQN 425**	**Page 56**
				SSI		
	1024	–		⊓⊔ TTL	**ERN 420**	
				⊓⊔ HTL	**ERN 430**	
	1024			⊓⊔ TTL	**ERN 421**	**Page 58**
				⊓⊔ HTL	**ERN 431**	
	512, 2048	8192 (13 bits)	–/4096	EnDat 2.2 / 01 with ∿ 1 V_{PP}	**ROC 413/ROQ 425**	**Catalog: *Rotary Encoders***
	–	33554432 (25 bits)		EnDat 2.2/22	**ROC 425/ROQ 437**[1]	
	50 to 10000	–		⊓⊔ TTL	**ROD 426/ROD 420**	
	50 to 5000			⊓⊔ HTL	**ROD 436/ROD 430**	
	50 to 10000			⊓⊔ TTL	**ROD 466**	
	1000 to 5000			∿ 1 V_{PP}	**ROD 486/ROD 480**	
	512	8192 (13 bits)	–/4096	EnDat 2.2 / 01 with ∿ 1 V_{PP}	**ROC 1013/ROQ 1025**	
	–	8388608 (23 bits)		EnDat 2.2/22	**ROC 1023/ROQ 1035**	
	100 to 3600	–		⊓⊔ TTL	**ROD 1020**	
				∿ 1 V_{PP}	**ROD 1080**	
				⊓⊔ HTLs	**ROD 1030**	
	5000 to 36000[2]			⊓⊔ TTL	**ROD 1070**	
	600 to 2400	–		⊓⊔ HTL/HTLs	**ROD 1930**	

Rotary encoders and angle encoders for integrated and hollow-shaft motors

Series	Overall dimensions	Diameter	Mechanically permissible speed	Natural freq. of stator connection	Maximum operating temperature
Angle encoders with integral bearing and integrated stator coupling					
RCN 2000	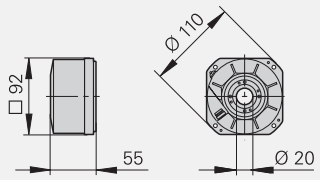	–	≤ 1 500 min^{-1}	≥ 1 000 Hz	*RCN 23xx:* 60 °C *RCN 25xx:* 50 °C
RCN 5000	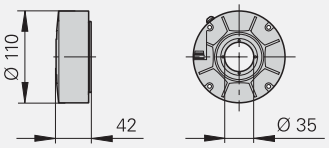	–	≤ 1 500 min^{-1}	≥ 1 000 Hz	*RCN 53xx:* 60 °C *RCN 55xx:* 50 °C
RCN 8000	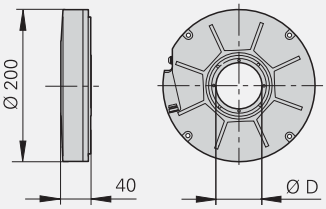	D: 60 mm and 100 mm	≤ 500 min^{-1}	≥ 900 Hz	50 °C
Angle encoders without integral bearing					
ERA 4000 Steel scale drum	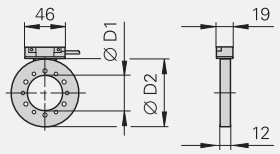	D1: 40 mm to 512 mm D2: 76.75 mm to 560.46 mm	≤ 10 000 min^{-1} to ≤ 1 500 min^{-1}	–	80 °C
ERA 7000 For inside diameter mounting	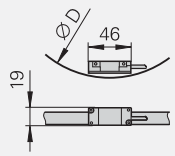	D: 458.62 mm to 1 146.10 mm	≤ 250 min^{-1} to ≤ 220 min^{-1}	–	80 °C
ERA 8000 For outside diameter mounting	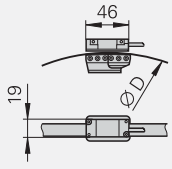	D: 458.11 mm to 1 145.73 mm	≤ 50 min^{-1} to ≤ 45 min^{-1}	–	80 °C
Modular encoders without integral bearing with magnetic graduation					
ERM 200	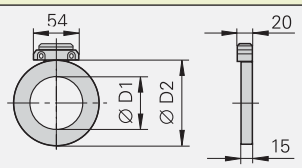	D1: 40 mm to 410 mm D2: 75.44 mm to 452.64 mm	≤ 19 000 min^{-1} to ≤ 3 000 min^{-1}	–	100 °C
ERM 2400	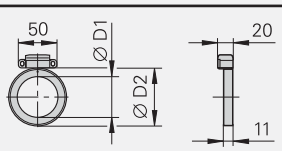	D1: 40 mm to 100 mm D2: 64.37 mm to 128.75 mm	≤ 42 000 min^{-1} to ≤ 20 000 min^{-1}	–	100 °C
ERM 2900		D1: 40 mm to 100 mm D2: 58.06 mm to 120.96 mm	≤ 35 000 min^{-1}/ ≤ 16 000 min^{-1}		

[1] Interfaces for Fanuc and Mitsubishi controls upon request

[2] Segment solutions upon request

	Voltage supply	System accuracy	Signal periods per revolution	Positions per revolution	Interface[1]	Model	More information
	3.6 V to 14 V DC	± 5“ ± 2,5“	16384	67108864 (26 bits) 268435456 (28 bits)	EnDat 2.2 / 02 with ~ 1 V_{PP}	**RCN 2380** **RCN 2580**	**Catalog:** ***Angle Encoders*** *with Integral Bearing*
		± 5“ ± 2,5“	–	67108864 (26 bits) 268435456 (28 bits)	EnDat 2.2/22	**RCN 2310**[3] **RCN 2510**[3]	
	3.6 V to 14 V DC	± 5“ ± 2,5“	16384	67108864 (26 bits) 268435456 (28 bits)	EnDat 2.2 / 02 with ~ 1 V_{PP}	**RCN 5380** **RCN 5580**	
		± 5“ ± 2,5“	–	67108864 (26 bits) 268435456 (28 bits)	EnDat 2.2/22	**RCN 5310**[3] **RCN 5510**[3]	
	3.6 V to 14 V DC	± 2“ ± 1“	32768	536870912 (29 bits)	EnDat 2.2 / 02 with ~ 1 V_{PP}	**RCN 8380** **RCN 8580**	
		± 2“ ± 1“	–		EnDat 2.2/22	**RCN 8310**[3] **RCN 8510**[3]	
	5 V DC ± 0.5 V	–	12000 to 52000	–	~ 1 V_{PP}	**ERA 4280C**	**Catalog:** ***Angle Encoders*** *without Integral Bearing*
			6000 to 44000			**ERA 4480C**	
			3000 to 13000			**ERA 4880C**	
	5 V DC ± 0.25 V	–	**Full circle**[2] 36000 to 90000	–	~ 1 V_{PP}	**ERA 7480C**	
	5 V DC ± 0.25 V	–	**Full circle**[2] 36000 to 90000	–	~ 1 V_{PP}	**ERA 8480C**	
	5 V DC ± 0.5 V	–	600 to 3600	–	⊓⊔ TTL	**ERM 220**	**Catalog:** ***Magnetic Modular Encoders***
					~ 1 V_{PP}	**ERM 280**	
	5 V DC ± 0.5 V	–	512 to 1024	–	~ 1 V_{PP}	**ERM 2484**	
			256/400	–		**ERM 2984**	

[3] **Functional safety** upon request

Exposed linear encoders for linear drives

Series	Overall dimensions	Traversing speed	Acceleration in measuring direction	Accuracy grade
LIP 400	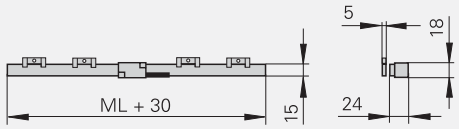	≤ 30 m/min	≤ 200 m/s^2	To ± 0.5 µm
LIF 400	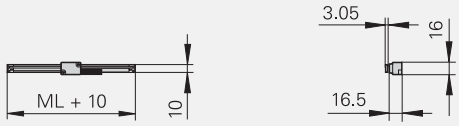	≤ 72 m/min	≤ 200 m/s^2	± 3 µm
LIC 4000 Absolute linear encoder	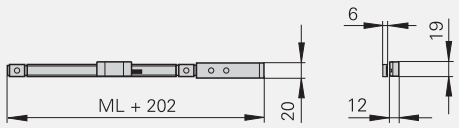	≤ 480 m/min	≤ 500 m/s^2	± 5 µm
	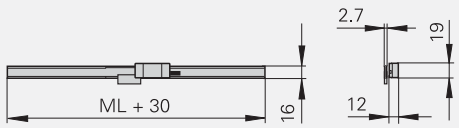			± 5 µm[1)]
LIDA 400	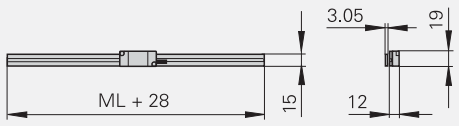	≤ 480 m/min	≤ 200 m/s^2	± 5 µm
	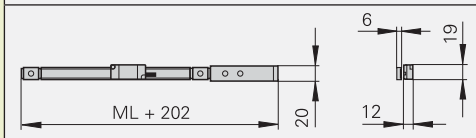			± 5 µm[1)]
LIDA 200	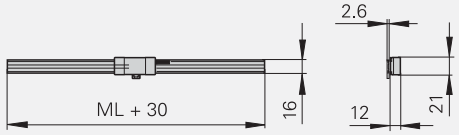	≤ 600 m/min	≤ 200 m/s^2	± 30 µm
PP 200 Two-coordinate encoder	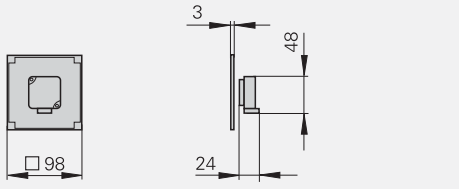	≤ 72 m/min	≤ 200 m/s^2	± 2 µm

[1)] After linear error compensation

	Measuring lengths	Voltage supply	Signal period	Cutoff frequency –3 dB	Switching output	Interface	Model	More information
	70 mm to 420 mm	5 V DC ± 0.25 V	2 µm	≥ 250 kHz	–	~ 1 V_{PP}	**LIP 481**	**Catalog:** ***Exposed Linear Encoders***
	70 mm to 1 020 mm	5 V DC ± 0.25 V	4 µm	≥ 300 kHz	Homing track Limit switches	~ 1 V_{PP}	**LIF 481**	
	140 mm to 27 040 mm	3.6 V to 14 V DC	–	–	–	EnDat 2.2 / 22 Resolution 0.001 µm	**LIC 4015**	
	140 to 6 040 mm						**LIC 4017**	
	140 mm to 30 040 mm	5 V DC ± 0.25 V	20 µm	≥ 400 kHz	Limit switches	~ 1 V_{PP}	**LIDA 485**	
	240 mm to 6 040 mm						**LIDA 487**	
	Up to 10 000 mm	5 V DC ± 0.25 V	200 µm	≥ 50 kHz	–	~ 1 V_{PP}	**LIDA 287**	
	Measuring range 68 mm x 68 mm	5 V DC ± 0.25 V	4 µm	≥ 300 kHz	–	~ 1 V_{PP}	**PP 281**	

Sealed linear encoders for linear drives

Protection: IP 53 to IP 64[1] (EN 60529)

Series	Overall dimensions	Traversing speed	Acceleration in measuring direction	Natural frequency of coupling	Measuring lengths
Linear encoders with slimline scale housing					
LF	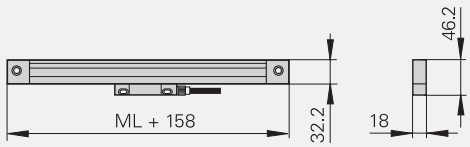	≤ 60 m/min	≤ 100 m/s²	≥ 2000 Hz	50 mm to 1220 mm
LC Absolute linear encoder	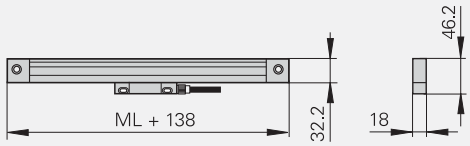	≤ 180 m/min	≤ 100 m/s²	≥ 2000 Hz	70 mm to 2040 mm[3]
Linear encoders with full-size scale housing					
LF	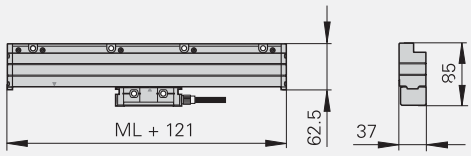	≤ 60 m/min	≤ 100 m/s²	≥ 2000 Hz	140 mm to 3040 mm
LC Absolute linear encoder	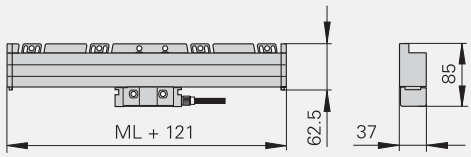	≤ 180 m/min	≤ 100 m/s²	≥ 2000Hz	140 mm to 4240 mm 140 mm to 3040 mm
	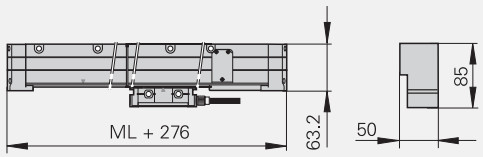	≤ 120 m/min (180 m/min upon request)	≤ 100 m/s²	≥ 780 Hz	3240 mm to 28040 mm
LB	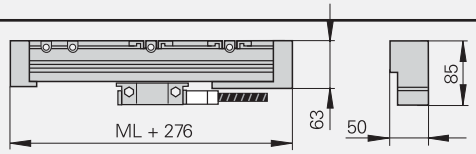	≤ 120 m/min (180 m/min upon request)	≤ 60 m/s²	≥ 650 Hz	440 mm to 30040 mm (to 72040 mm upon request)

[1] After installation according to mounting instructions
[2] Interfaces for Siemens, Fanuc and Mitsubishi controls upon request
[3] As of 1340 mm measuring length only with mounting spar or tensioning elements
[4] **Functional Safety** upon request

	Accuracy grade	Voltage supply	Signal period	Cutoff frequency –3 dB	Resolution	Interface[2)]	Type	More information
	± 5 µm	5 V DC ± 0.25 V	4 µm	≥ 250 kHz	–	∿ 1 V_{PP}	**LF 485**	**Catalog:** ***Linear Encoders*** *for Numerically Controlled Machine Tools*
	± 5 µm	3.6 V to 14 V DC	–	–	To 0.01 µm	EnDat 2.2/22	**LC 415**[4)]	
	± 3 µm				To 0.001 µm			
	± 2 µm; ± 3 µm	5 V DC ± 0.25 V	4 µm	≥ 250 kHz	–	∿ 1 V_{PP}	**LF 185**	**Catalog:** ***Linear Encoders*** *for Numerically Controlled Machine Tools*
	± 5 µm	3.6 V to 14 V DC	–	–	To 0.01 µm	EnDat 2.2/22	**LC 115**[4)]	
	± 3 µm				To 0.001 µm			
	± 5 µm	3.6 V to 14 V DC	–	–	To 0.01 µm	EnDat 2.2/22	**LC 211**	
			40 µm	≥ 250 kHz		EnDat 2.2 / 02 with ∿ 1 V_{PP}	**LC 281**	
	To ± 5 µm	5 V DC ± 0.25 V	40 µm	≥ 250 kHz	–	∿ 1 V_{PP}	**LB 382**	

Rotary encoders and angle encoders for three-phase AC and DC motors
General information

Speed stability
To ensure **smooth drive performance**, an encoder must provide a **large number of measuring steps per revolution.** The encoders in the HEIDENHAIN product program are therefore designed to supply the necessary numbers of signal periods per revolution to meet the speed stability requirement.

HEIDENHAIN rotary and angular encoders featuring integral bearing and stator couplings provide very good performance: shaft misalignment within certain tolerances (see *Specifications*) do not cause any position error or impair speed stability.

At low speeds, the **position error of the encoder within one signal period** affects speed stability. In encoders with purely serial data transmission, the LSB (Least Significant Bit) goes into the speed stability. (See also *Measuring Accuracy*.)

Transmission of measuring signals
To ensure the best possible dynamic performance with digitally controlled motors, the sampling time of the speed controller should not exceed approx. 256 µs. The feedback values for the position and speed controller must therefore be available in the controlling system with the least possible delay.

High clock frequencies are needed to fulfill such demanding time requirements on position values transfer from the encoder to the controlling system with a serial data transmission (see also *Interfaces; Absolute Position Values*). HEIDENHAIN encoders for electric drives therefore provide the position values via the fast, **purely serial EnDat 2.2 interface**, or transmit additional **incremental signals**, which are available without delay for use in the subsequent electronics for speed and position control.

For **standard drives,** manufacturers primarily use the especially robust HEIDENHAIN absolute encoders without integral bearing **ECI/EQI** or rotary encoders with **TTL** or **HTL compatible output signals**—as well as additional commutation signals for permanent-magnet DC drives.

For **digital speed control** on machines with **high requirements for dynamics,** a large number of measuring steps is required—usually above 500000 per revolution. For applications with standard drives, as with resolvers, approx. 60000 measuring steps per revolution are sufficient.

HEIDENHAIN encoders for drives with digital position and speed control are therefore equipped with the **purely serial EnDat22 interface**, or they additionally provide **sinusoidal incremental signal** with signal periods of 1 V_{PP} (EnDat01).

The high internal resolution of the **EnDat22** encoders permit resolutions greater than 19 bits (524288 measuring steps) in inductive systems and greater than 23 bits (approx. 8 million measuring steps) in photoelectric encoders.

Thanks to their high signal quality, the sinusoidal incremental signals of the **EnDat01** encoders can be highly subdivided in the subsequent electronics (diagram 1). Even at shaft speeds of 12000 min^{-1}, the signal arrives at the input circuit of the controlling system with a frequency of only approx. 400 kHz (Diagram 2). 1 V_{PP} incremental signals permit cable lengths up to 150 meters. (See also *Incremental Signals – 1 V_{PP}*)

Diagram 1:
Signal periods per revolution and the resulting number of measuring steps per revolution as a function of the subdivision factor

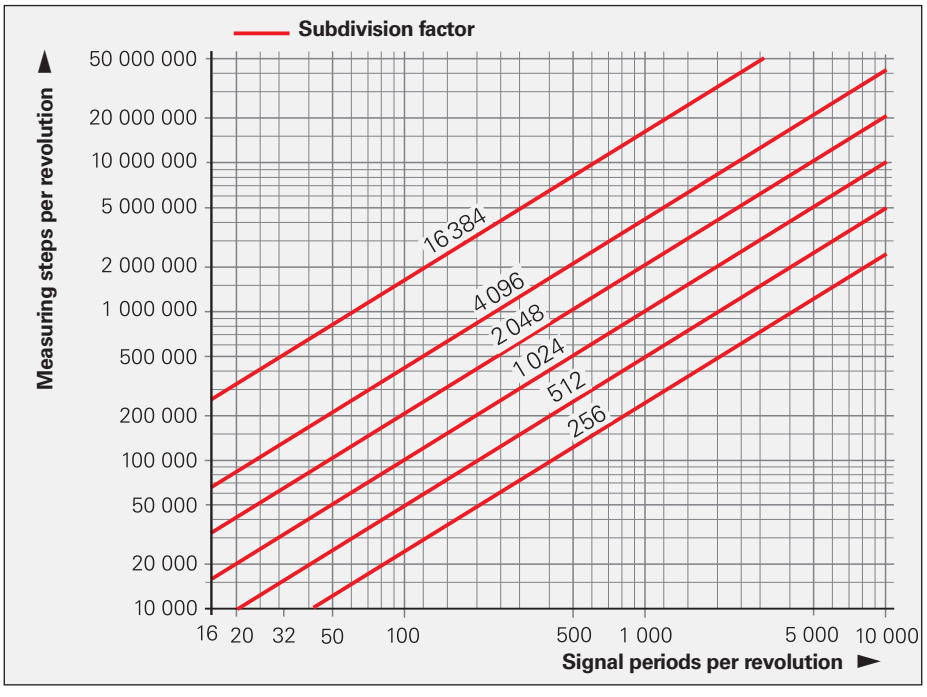

HEIDENHAIN absolute encoders for "digital" drives also supply additional sinusoidal incremental signals with the same characteristics as those described above. Absolute encoders from HEIDENHAIN use the EnDat interface (for **En**coder **Dat**a) for the **serial data transmission** of absolute position values and other information for **automatic self-configuration, monitoring and diagnosis.** (See *Absolute Position Values – EnDat.*) This makes it possible to use the same subsequent electronics and cabling technology for all HEIDENHAIN encoders.

Important encoder specifications can be read from the memory of the EnDat encoder for automatic self-configuration, and motor-specific parameters can be saved in the OEM memory area of the encoder. The usable size of the OEM memory on the rotary encoders in the current catalogs is at least 1.4 KB (≙ 704 EnDat words).

Most absolute encoders themselves already subdivide the sinusoidal scanning signals by a factor of 4096 or greater. If the transmission of absolute positions is fast enough (for example, EnDat 2.1 with 2 MHz or EnDat 2.2 with 8 MHz clock frequency), these systems can do without incremental signal evaluation.

Benefits of this data transmission technology include greater noise immunity of the transmission path and less expensive connectors and cables. Rotary encoders with EnDat 2.2 interface offer the additional feature of being able to evaluate an external temperature sensor, located in the motor coil, for example. The digitized temperature values are transmitted as part of the EnDat 2.2 protocol without an additional line.

Bandwidth
The attainable gain for the position and speed control loops, and therefore the bandwidth of the drives for command response and control reliability, are sometimes limited by the rigidity of the coupling between the motor shaft and encoder shaft as well as by the natural frequency of the coupling. HEIDENHAIN therefore offers rotary and angular encoders for high-rigidity shaft coupling. The stator couplings mounted on the encoders have a **high natural frequency** up to 1800 Hz. For the modular and inductive rotary encoders, the stator and rotor are firmly screwed to the motor housing and to the shaft (see also *Mechanical design types and mounting*).

Fault exclusion for mechanical coupling
HEIDENHAIN encoders designed for functional safety can be mounted so that the rotor or stator fastening does not accidentally loosen.

Size
A higher permissible operating temperature permits a smaller motor size for a specific rated torque. Since the temperature of the motor also affects the temperature of the encoder, HEIDENHAIN offers encoders for **permissible operating temperatures up to 120 °C.** These encoders make it possible to design machines with smaller motors.

Power loss and noise emission
The power loss of the motor, the accompanying heat generation, and the acoustic noise of motor operation are influenced by the position error of the encoder within one signal period. For this reason, encoders with a high signal quality of better than ± 1 % of the signal period are preferred. (See also *Measuring Accuracy.*)

Bit error rate
With rotary encoders with purely serial interface for integration in motors, HEIDENHAIN recommends conducting a type test for the bit error rate.

When using functionally safe encoders without closed metal housings and/or cable assemblies that do not comply with the electrical connection directives (see *General electrical information*) it is always necessary to measure the bit error rate in a type test under application conditions.

Data transfer in hybrid cables
For particularly limited spaces in machines or drag chains, motors that contain encoders with the EnDat22 interface can be connected to the subsequent electronics through hybrid cable technology. The HMC 6 hybrid cables save a good deal of space because they contain all the lines for the encoder, the motor, and the brake. Cable lengths up to 100 m are permissible.

Diagram 2:
Shaft speed and resulting output frequency as a function of the number of signal periods per revolution

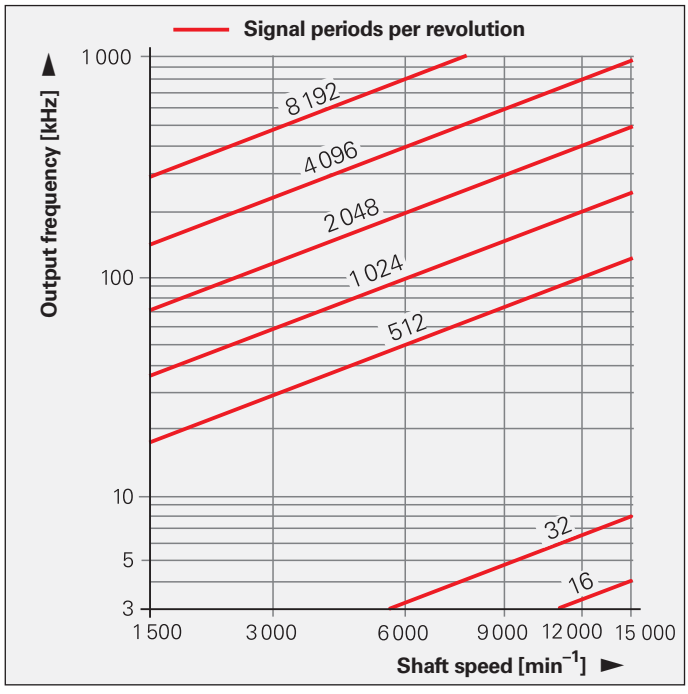

Linear encoders for linear drives
General information

Selection criteria for linear encoders
HEIDENHAIN recommends the use of **exposed linear encoders** whenever the severity of contamination inherent in a particular machine environment does not preclude the use of optical measuring systems, and if relatively high accuracy is desired, e.g. for high-precision machine tools and measuring equipment, or for production, testing and inspecting equipment in the semiconductor industry.

Particularly for applications on machine tools that release coolants and lubricants, HEIDENHAIN recommends **sealed linear encoders.** Here the requirements on the mounting surface and on machine guideway accuracy are less stringent than for exposed linear encoders, and therefore installation is faster.

Speed stability
To ensure smooth-running servo performance, the linear encoder must permit a resolution commensurate with the given speed control range:
- On handling equipment, resolutions in the range of several microns are sufficient.
- Feed drives for machine tools need resolutions of 0.1 µm and finer.
- Production equipment in the semiconductor industry requires resolutions of a few nanometers.

At low traversing speeds, the **position error within one signal period** has a decisive influence on the speed stability of linear motors. (See also *Measuring Accuracy.*)

Traversing speeds
Exposed linear encoders function without contact between the scanning head and the scale. The maximum permissible traversing speed is limited only by the cutoff frequency (–3 dB) of the output signals.

On sealed linear encoders, the scanning unit is guided along the scale on a ball bearing. Sealing lips protect the scale and scanning unit from contamination. The ball bearing and sealing lips permit mechanical traversing speeds up to **180 m/min**.

Signal period and resulting measuring step as a function of the subdivision factor

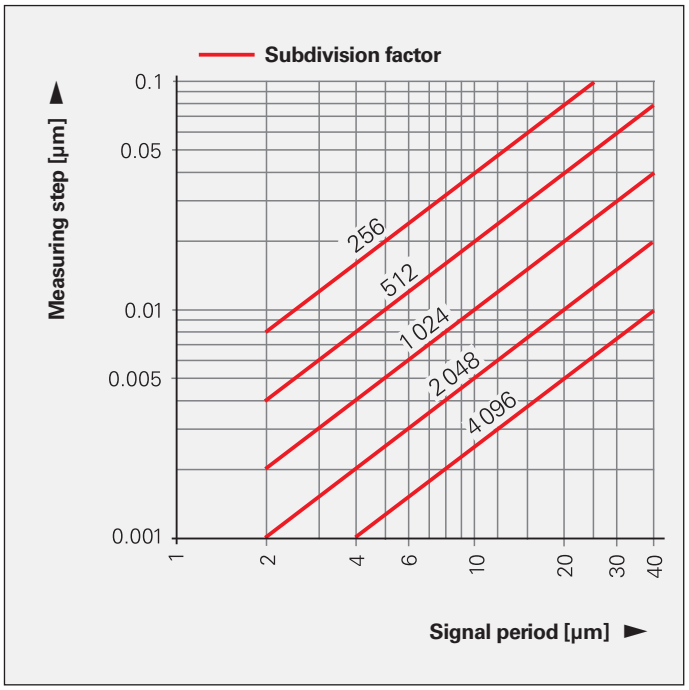

Transmission of measuring signals
The information above on rotary and angle encoder signal transmission essentially applies also to linear encoders. If, for example, one wishes to traverse at a minimum velocity of 0.01 m/min with a sampling time of 25 µs, and if one assumes that the measuring step should change by at least one measuring step per sampling cycle, then one needs a measuring step of approx. 0.04 µm. To avoid the need for special measures in the subsequent electronics, input frequencies should be limited to less than 1 MHz.

Linear encoders with **sinusoidal output signals** or absolute position values according to **EnDat 2.2** are best suited for high traversing speeds and small measuring steps. Sinusoidal voltage signals with levels of **1 V_{PP}** attain a –3 dB cutoff frequency of approx. 200 kHz and more at a permissible cable length of up to 150 m.

The figure below illustrates the relationship between output frequency, traversing speeds, and signal periods of linear encoders. Even at a signal period of 4 µm and a traversing velocity of 70 m/min, the frequency reaches only 300 kHz.

Bandwidth
On linear motors, a coupling lacking in rigidity can limit the bandwidth of the position control loop. The manner in which the linear encoder is mounted on the machine has a very significant influence on the rigidity of the coupling. (See *Design Types and Mounting*.)

On sealed linear encoders, the scanning unit is guided along the scale. A coupling connects the scanning carriage with the mounting block and compensates the misalignment between the scale and the machine guideways. This permits relatively large mounting tolerances. The coupling is very rigid in the measuring direction and is flexible in the perpendicular direction. If the coupling is insufficiently rigid in the measuring direction, it could cause low natural frequencies in the position and velocity control loops and limit the bandwidth of the drive.

The sealed linear encoders recommended by HEIDENHAIN for linear motors generally have a **natural frequency of coupling greater than 650 Hz or 2 kHz** in the measuring direction, which in most applications exceeds the mechanical natural frequency of the machine and the bandwidth of the velocity control loop by factors of at least 5 to 10. HEIDENHAIN linear encoders for linear motors therefore have practically no limiting effect on the position and speed control loops.

Traversing speed and resulting output frequency as a function of the signal period

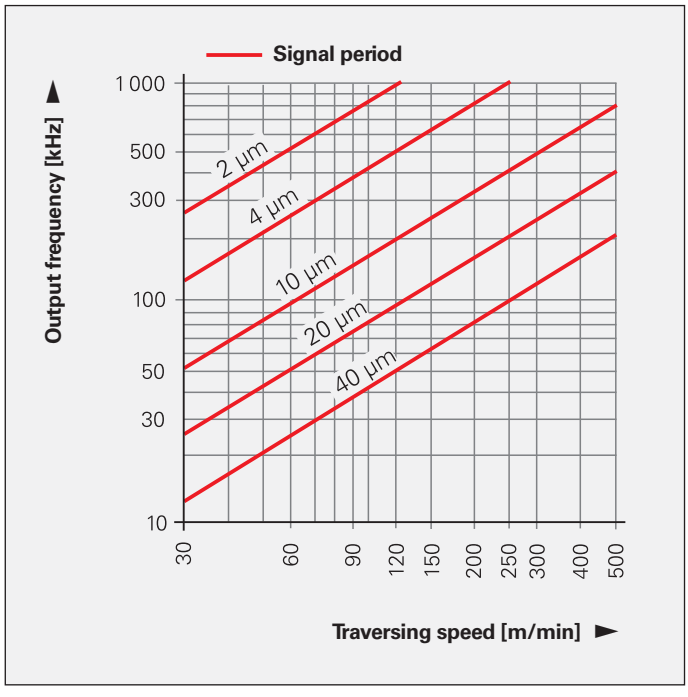

For more information on linear encoders for linear drives, refer to our catalogs *Exposed Linear Encoders* and *Linear Encoders for Numerically Controlled Machine Tools*.

Safety-related position measuring systems

The term **Functional Safety** designates HEIDENHAIN encoders that can be used in safety-related applications. These encoders operate as single-encoder systems with purely serial data transmission via EnDat 2.2. Reliable transmission of the position is based on two independently generated absolute position values and on error bits. These are then provided to the safe control.

Basic principle
HEIDENHAIN measuring systems for safety-related applications are tested for compliance with EN ISO 13849-1 (successor to EN 954-1) as well as EN 61508 and EN 61800-5-2. These standards describe the assessment of safety-related systems, for example based on the failure probabilities of integrated components and subsystems. This modular approach helps the manufacturers of safety-related systems to implement their complete systems, because they can begin with subsystems that have already been qualified. Safety-related position measuring systems with purely serial data transmission via EnDat 2.2 accommodate this technique. In a safe drive, the safety-related position measuring system is such a subsystem. A **safety-related position measuring system** consists of:

- Encoder with EnDat 2.2 transmission component
- Data transfer line with EnDat 2.2 communication and HEIDENHAIN cable
- EnDat 2.2 receiver component with monitoring function (EnDat master)

In practice, the **complete "safe servo drive" system** consists of:

- Safety-related position measuring system
- Safety-related control (including EnDat master with monitoring functions)
- Power stage with motor power cable and drive
- Physical connection between encoder and drive (e.g. rotor/stator connection)

Field of application
Safety-related position measuring systems from HEIDENHAIN are designed so that they can be used as single-encoder systems in applications with control category SIL 2 (according to EN 61508), performance level "d", category 3 (according to EN ISO 13849).

Additional measures in the control make it possible to use certain encoders for applications up to SIL-3, PL "e," category 4. The suitability of these encoders is indicated appropriately in the documentation (catalogs / product information sheets).

The functions of the safety-related position measuring system can be used for the following safety tasks in the complete system (also see EN 61800-5-2):

SS1	Safe Stop 1
SS2	Safe Stop 2
SOS	Safe Operating Stop
SLA	Safely Limited Acceleration
SAR	Safe Acceleration Range
SLS	Safely Limited Speed
SSR	Safe Speed Range
SLP	Safely Limited Position
SLI	Safely Limited Increment
SDI	Safe Direction
SSM	Safe Speed Monitor

Safety functions according to EN 61800-5-2

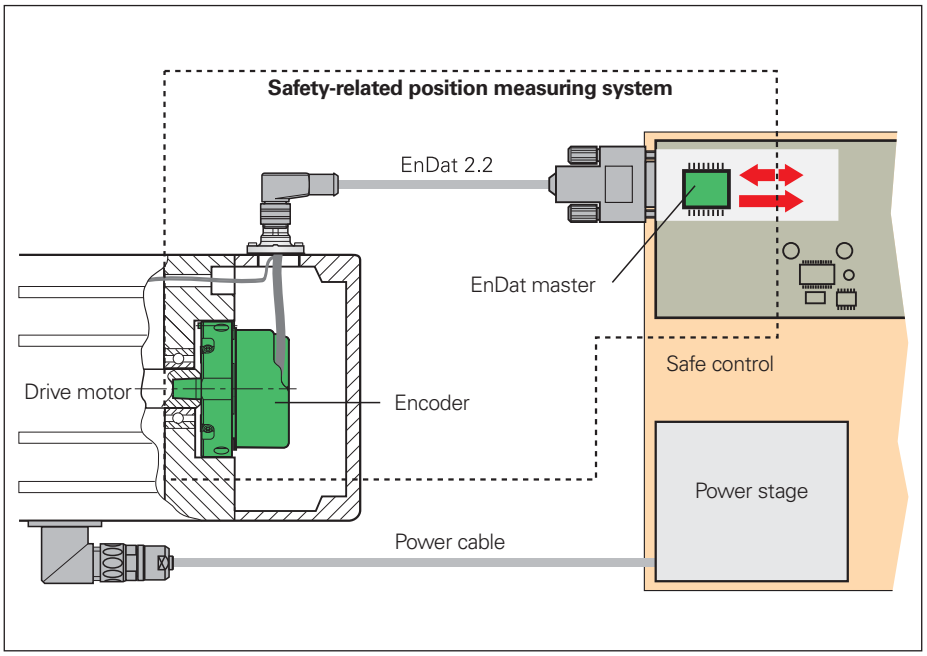

Complete safe drive system

Function
The safety strategy of the position measuring system is based on two mutually independent position values and additional error bits produced in the encoder and transmitted over the EnDat 2.2 protocol to the EnDat master. The EnDat master assumes various monitoring functions with which errors in the encoder and during transmission can be revealed. For example, the two position values are then compared. The EnDat master then makes the data available to the safe control. The control periodically tests the safety-related position measuring system to monitor its correct operation.

The architecture of the EnDat 2.2 protocol makes it possible to process all safety-relevant information and control mechanisms during unconstrained controller operation. This is possible because the safety-relevant information is saved in the additional information. According to EN 61 508, the architecture of the position measuring system is regarded as a single-channel tested system.

Documentation on the integration of the position measuring system
The intended use of position measuring systems places demands on the control, the machine designer, the installation technician, service, etc. The necessary information is provided in the documentation for the position measuring systems.

In order to be able to implement a position measuring system in a safety-related application, a suitable control is required. The control assumes the fundamental task of communicating with the encoder and safely evaluating the encoder data.

The requirements for integrating the EnDat master with monitoring functions in the safe control are described in the HEIDENHAIN document 533095. It contains, for example, specifications on the evaluation and processing of position values and error bits, and on electrical connection and cyclic tests of position measuring systems.

Document 1000344 describes additional measures that make it possible to use suitable encoders for applications up to SIL-3, PL "e," category 4.

Machine and plant manufacturers need not attend to these details. These functions must be provided by the control. Product information sheets, catalogs and mounting instructions provide information to aid the selection of a suitable encoder. The **product information sheets** and **catalogs** contain general data on function and application of the encoders as well as specifications and permissible ambient conditions. The **mounting instructions** provide detailed information on installing the encoders.

The architecture of the safety system and the diagnostic possibilities of the control may call for further requirements. **For example, the operating instructions of the control must explicitly state whether fault exclusion is required for the loosening of the mechanical connection between the encoder and the drive.** The machine designer is obliged to inform the installation technician and service technicians, for example, of the resulting requirements.

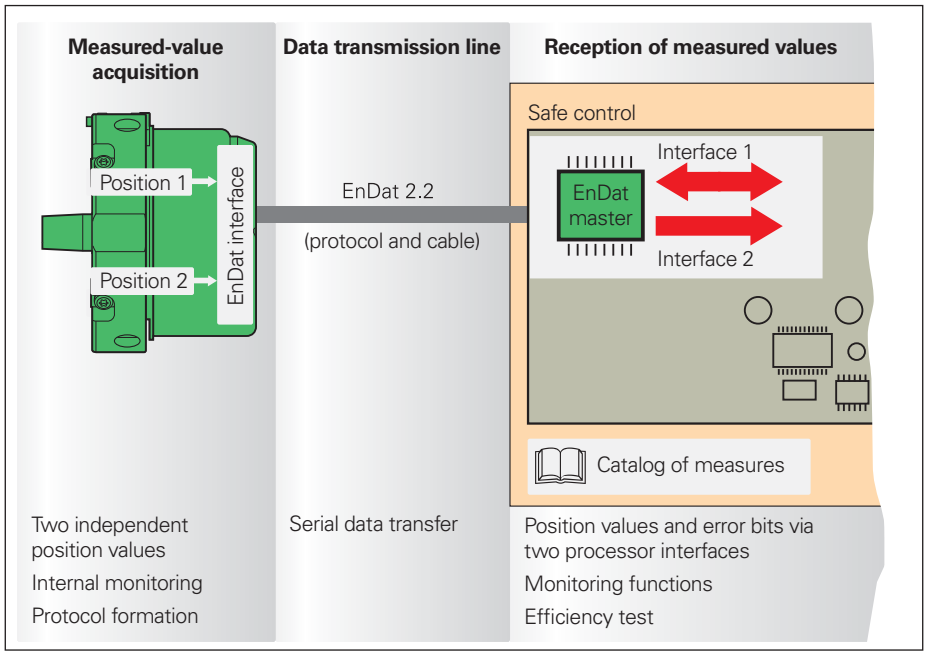

Safety-related position measuring system



For more information on the topic of functional safety, refer to the technical information documents *Safety-Related Position Measuring Systems* and *Safety-Related Control Technology* as well as the product information document of the functional safety encoders.

Measuring principles
Measuring standard

HEIDENHAIN encoders with optical scanning incorporate measuring standards of periodic structures known as graduations.

These graduations are applied to a carrier substrate of glass or steel. The scale substrate for large diameters is a steel tape.

HEIDENHAIN manufactures the precision graduations in specially developed, photolithographic processes.

- AURODUR: matte-etched lines on gold-plated steel tape with typical graduation period of 40 µm
- METALLUR: contamination-tolerant graduation of metal lines on gold, with typical graduation period of 20 µm
- DIADUR: extremely robust chromium lines on glass (typical graduation period of 20 µm) or three-dimensional chromium structures (typical graduation period of 8 µm) on glass
- SUPRADUR phase grating: optically three dimensional, planar structure; particularly tolerant to contamination; typical graduation period of 8 µm and finer
- OPTODUR phase grating: optically three dimensional, planar structure with particularly high reflectance, typical graduation period of 2 µm and finer

Magnetic encoders use a graduation carrier of magnetizable steel alloy. A graduation consisting of north poles and south poles is formed with a grating period of 400 µm. Due to the short distance of effect of electromagnetic interaction, and the very narrow scanning gaps required, finer magnetic graduations are not practical.

Encoders using the inductive scanning principle work with graduation structures of copper and nickel. The graduation is applied to a carrier material for printed circuits.

With the **absolute measuring method**, the position value is available from the encoder immediately upon switch-on and can be called at any time by the subsequent electronics. There is no need to move the axes to find the reference position. The absolute position information is read from the **grating on the circular scale,** which is designed as a serial code structure or consists of several parallel graduation tracks.

A separate incremental track or the track with the finest grating period is interpolated for the position value and at the same time is used to generate an optional incremental signal.

In **singleturn encoders**, the absolute position information repeats itself with every revolution. **Multiturn encoders** can also distinguish between revolutions.

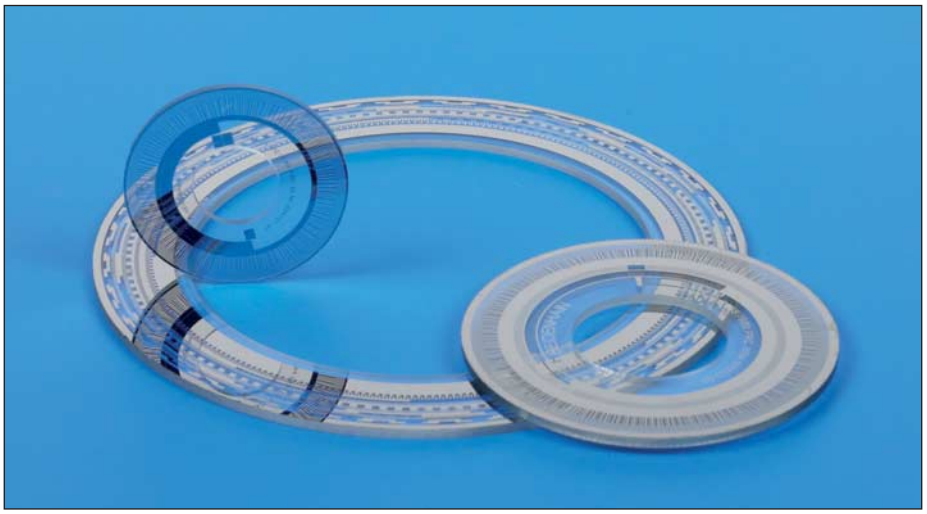

Circular graduations of absolute rotary encoders

With the **incremental measuring method**, the graduation consists of a periodic grating structure. The position information is obtained **by counting** the individual increments (measuring steps) from some point of origin. Since an absolute reference is required to ascertain positions, the graduated disks are provided with an additional track that bears a **reference mark**.

The absolute position established by the reference mark is gated with exactly one measuring step.

The reference mark must therefore be scanned to establish an absolute reference or to find the last selected datum.



Circular graduations of incremental rotary encoders

Scanning methods

Photoelectric scanning
Most HEIDENHAIN encoders operate using the principle of photoelectric scanning. Photoelectric scanning of a measuring standard is contact-free, and as such, free of wear. This method detects even very fine lines, no more than a few microns wide, and generates output signals with very small signal periods.

The ERN, ECN, EQN, ERO and ROD, RCN, RQN rotary encoders use the imaging scanning principle.

Put simply, the imaging scanning principle functions by means of projected-light signal generation: two graduations with equal or similar grating periods are moved relative to each other—the scale and the scanning reticle. The carrier material of the scanning reticle is transparent, whereas the graduation on the measuring standard may be applied to a transparent or reflective surface.

When parallel light passes through a grating, light and dark surfaces are projected at a certain distance. An index grating with the same or similar grating period is located here. When the two gratings move in relation to each other, the incident light is modulated: if the gaps are aligned, light passes through. If the lines of one grating coincide with the gaps of the other, no light passes through. A structured photosensor or photovoltaic cells convert these variations in light intensity into nearly sinusoidal electrical signals. Practical mounting tolerances for encoders with the imaging scanning principle are achieved with grating periods of 10 µm and larger.

The ECN and EQN absolute rotary encoders with optimized scanning have a single large photosensor instead of a group of individual photoelements. Its structures have the same width as that of the measuring standard. This makes it possible to do without the scanning reticle with matching structure.

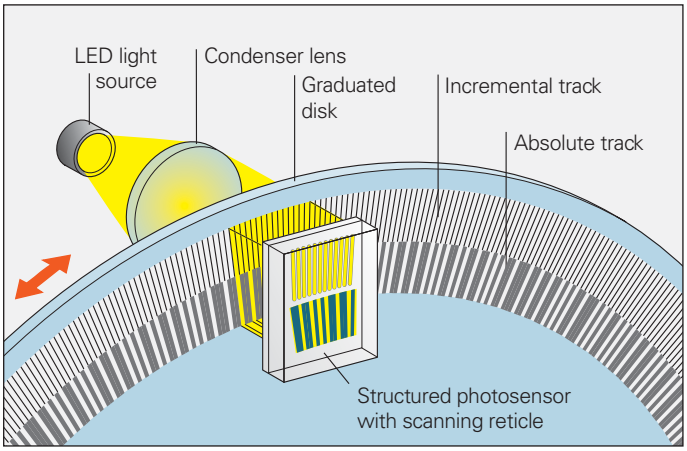

Photoelectric scanning according to the imaging scanning principle

Other scanning principles
Some encoders function according to other scanning methods. ERM encoders use a permanently magnetized MAGNODUR graduation that is scanned with magnetoresistive sensors.

ECI/EQI/EBI and RIC/RIQ rotary encoders operate according to the inductive measuring principle. Here, moving graduation structures modulate a high-frequency signal in its amplitude and phase. The position value is always formed by sampling the signals of all receiver coils distributed evenly around the circumference. This permits large mounting tolerances with high resolution.

Electronic commutation with position encoders

Commutation in permanent-magnet three-phase motors
Before start-up, permanent-magnet three-phase motors must have an absolute position value available for electrical commutation. HEIDENHAIN rotary encoders are available with different types of rotor position recognition:

- **Absolute rotary encoders** in singleturn and multiturn versions provide the absolute position information immediately after switch-on. This makes it immediately possible to derive the exact position of the rotor and use it for electronic commutation.
- **Incremental rotary encoders with** a second track—the **Z1 track**—provide one sine and one cosine signal (C and D) for each motor shaft revolution in addition to the incremental signals. For sine commutation, rotary encoders with a Z1 track need only a subdivision unit and a signal multiplexer to provide both the absolute rotor position from the Z1 track with an accuracy of ± 5° and the position information for speed and position control from the incremental track (see also *Interfaces—Commutation signals*).
- **Incremental rotary encoders with block commutation tracks** also output three commutation signals U, V and W. which are used to drive the power electronics directly. These encoders are available with various commutation tracks. Typical versions provide 3 signal periods (120° mech.) or 4 signal periods (90° mech.) per commutation and revolution. Independently of these signals, the incremental square-wave signals serve for position and speed control. (See also *Interfaces—Commutation signals*.)

Commutation of synchronous linear motors
Like absolute rotary and angular encoders, absolute linear encoders of the LIC and LC series provide the exact position of the moving motor part immediately after switch-on. This makes it possible to start with maximum holding load on vertical axes even at a standstill.

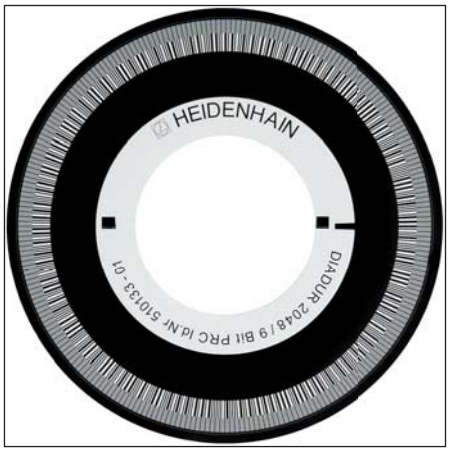

Circular scale with serial code track and incremental track



Circular scale with Z1 track



Circular scale with block commutation tracks

Keep in mind the switch-on behavior of the encoders (see *Interfaces* catalog, ID 1078628-xx).

Measuring accuracy

The quantities influencing the accuracy of **linear encoders** are listed in the *Linear Encoders for Numerically Controlled Machine Tools* and *Exposed Linear Encoders* catalogs.

The **accuracy of angular measurement** is mainly determined by
- the quality of the graduation,
- the quality of the scanning process,
- the quality of the signal processing electronics,
- the eccentricity of the graduation to the bearing,
- the error of the bearing,
- the coupling to the measured shaft, and
- the elasticity of the stator coupling (ERN, ECN, EQN) or shaft coupling (ROD, ROC, ROQ, RIC, RIQ)

These factors of influence are comprised of encoder-specific error and application-dependent issues. All individual factors of influence must be considered in order to assess the attainable **total accuracy.**

Error specific to the measuring device

For rotary encoders, the error that is specific to the measuring device is shown in the Specifications as the **system accuracy.**

The extreme values of the total deviations of a position are—referenced to their mean value—within the system accuracy ± a.

The system accuracy reflects position errors within one revolution as well as those within one signal period and—for rotary encoders with stator coupling—the errors of the shaft coupling.

Position error within one signal period

Position errors within one signal period are considered separately, since they already have an effect even in very small angular motions and in repeated measurements. They especially lead to speed ripples in the speed control loop.

The position error within one signal period ± u results from the quality of the scanning and—for encoders with integrated pulse-shaping or counter electronics—the quality of the signal-processing electronics. For encoders with sinusoidal output signals, however, the errors of the signal processing electronics are determined by the subsequent electronics.

The following individual factors influence the result:
- The size of the signal period
- The homogeneity and period definition of the graduation
- The quality of scanning filter structures
- The characteristics of the sensors
- The stability and dynamics of further processing of the analog signals

These errors are considered when specifying the position error within one signal period. For rotary encoders with integral bearing and sinusoidal output signals it is better than ± 1% of the signal period or better than ± 3% for encoders with square-wave output signals. These signals are suitable for up to 100-fold PLL subdivision.

The position error within one signal period ± u is indicated in the specifications of the angle encoders.

As the result of increased reproducibility of a position, much smaller measuring steps are still useful.

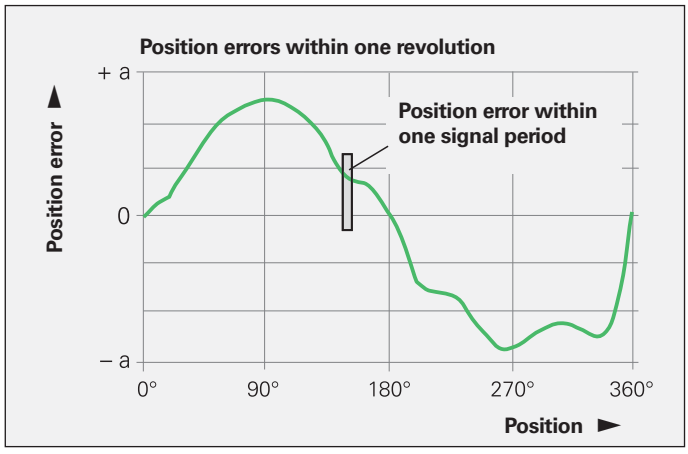

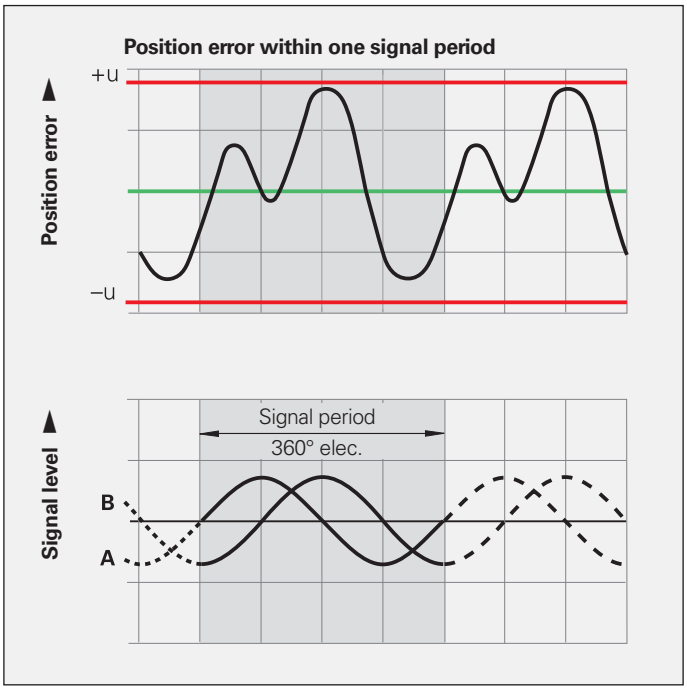

Application-dependent error

For **rotary encoders with integral bearing,** the specified system accuracy already includes the error of the bearing. For angle encoders with separate **shaft coupling** (ROD, ROC, ROQ, RIC, RIQ), the angle error of the coupling must be added (see *Mechanical design types and mounting*). For angle encoders with **stator coupling** (ERN, ECN, EQN), the system accuracy already includes the error of the shaft coupling.

In contrast, the mounting and adjustment of the scanning head normally have a significant effect on the accuracy that can be achieved by **encoders without integral bearings.** Of particular importance are the mounting eccentricity of the graduation and the radial runout of the measured shaft. The application-dependent error values for these encoders must be measured and calculated individually in order to evaluate the **total accuracy**.

Rotary encoders with photoelectric scanning

In addition to the system accuracy, the mounting and adjustment of the scanning head normally have a significant effect on the accuracy that can be achieved by rotary encoders without integral bearings with photoelectric scanning. Of particular importance are the mounting eccentricity of the graduation and the radial runout of the measured shaft.

Example
ERO 1420 rotary encoder with a mean graduation diameter of 24.85 mm:
A radial runout of the measured shaft of 0.02 mm results in a position error within one revolution of ± 330 angular seconds.

To evaluate the **accuracy of modular rotary encoders without integral bearing** (ERO), each of the significant errors must be considered individually.

1. Directional deviations of the graduation
ERO: The extreme values of the directional deviation with respect to their mean value are shown in the *Specifications* as the graduation accuracy for each model. The graduation accuracy and the position error within a signal period comprise the system accuracy.

2. Errors due to eccentricity of the graduation to the bearing
Under normal circumstances, the bearing will have a certain amount of radial deviation or geometric error after the disk/hub assembly is mounted. When centering using the centering collar of the hub, please note that, for the encoders listed in this catalog, HEIDENHAIN guarantees an eccentricity of the graduation to the centering collar of under 5 µm. For the modular rotary encoders, this accuracy value presupposes a diameter deviation of zero between the drive shaft and the "master shaft."

If the centering collar is centered on the bearing, then in a worst-case situation both eccentricity vectors could be added together.

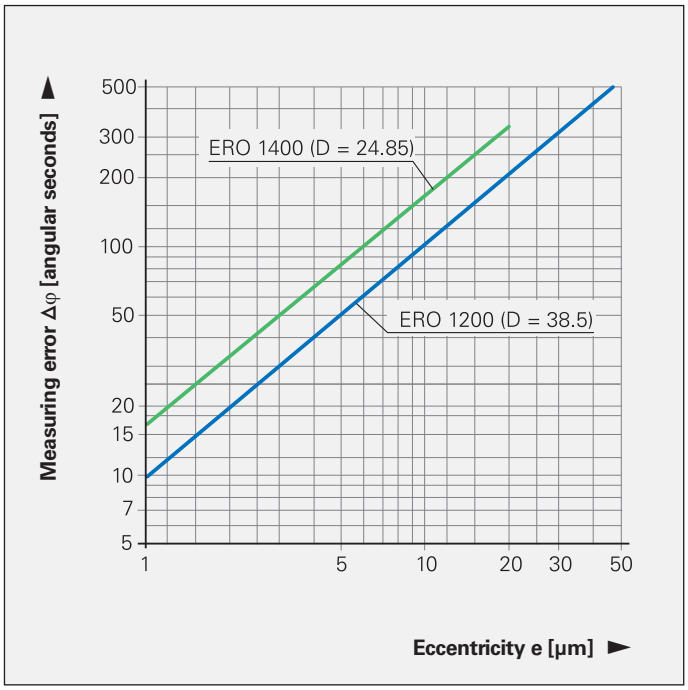

Resultant measured deviations Δφ for various eccentricity values e as a function of graduation diameter D

The following relationship exists between the eccentricity e, the mean graduation diameter D and the measuring error Δφ (see illustration below):

$$\Delta\varphi = \pm 412 \cdot \frac{e}{D}$$

Δφ = Measuring error in ″ (angular seconds)
e = Eccentricity of the radial grating to the bearing in µm
D = Graduation centerline diameter in mm

Model	Mean graduation diameter D	Error per 1 µm of eccentricity
ERO 1420 **ERO 1470** **ERO 1480**	D = 24.85 mm	± 16.5″
ERO 1225 **ERO 1285**	D = 38.5 mm	± 10.7″

3. Error due to radial runout of the bearing
The equation for the measuring error Δφ is also valid for radial deviation of the bearing if the value e is replaced with the eccentricity value, i.e. half of the radial deviation (half of the displayed value). Bearing compliance to radial shaft loading causes similar errors.

4. Position error within one signal period $\Delta\varphi_u$
The scanning units of all HEIDENHAIN encoders are adjusted so that without any further electrical adjustment being necessary while mounting, the maximum position error values within one signal period will not exceed the values listed below.

Model	Line count	Position error within one signal period $\Delta\varphi_u$	
		TTL	1 V_{PP}
ERO	2048	≤ ± 19.0″	≤ ± 6.5″
	1500	≤ ± 26.0″	≤ ± 8.7″
	1024	≤ ± 38.0″	≤ ± 13.0″
	1000	≤ ± 40.0″	≤ ± 14.0″
	512	≤ ± 76.0″	≤ ± 25.0″

The values for the position errors within one signal period are already included in the system accuracy. Larger errors can occur if the mounting tolerances are exceeded.

Rotary encoders with inductive scanning

All with all rotary encoders without integral bearing, the attainable accuracy for those with inductive scanning is dependent on the mounting and application conditions. The system accuracy is given for 20 °C and low speed. The full use of all permissible tolerances for operating temperature, shaft speed, supply voltage, scanning gap and mounting are to be calculated for the typical total error.

Thanks to the circumferential scanning of the inductive rotary encoders, the total error is less than for rotary encoders without integral bearing but with optical scanning. Because the total error cannot be calculated through a simple calculation rule, the values are provided in the following table.

Model	System accuracy	Total deviation
ECI 1100 **EQI 1100** **EnDat01/21**	± 280″	± 480″
ECI 1100 **EBI 1100** **EnDat22**	± 120″	± 280″
ECI 1300 **EQI 1300** **EnDat22**	± 65″	± 120″
ECI 1300 **EQI 1300** **EnDat01**	± 180″	± 280″
ECI 100 **EBI 100**	± 90″	± 180″

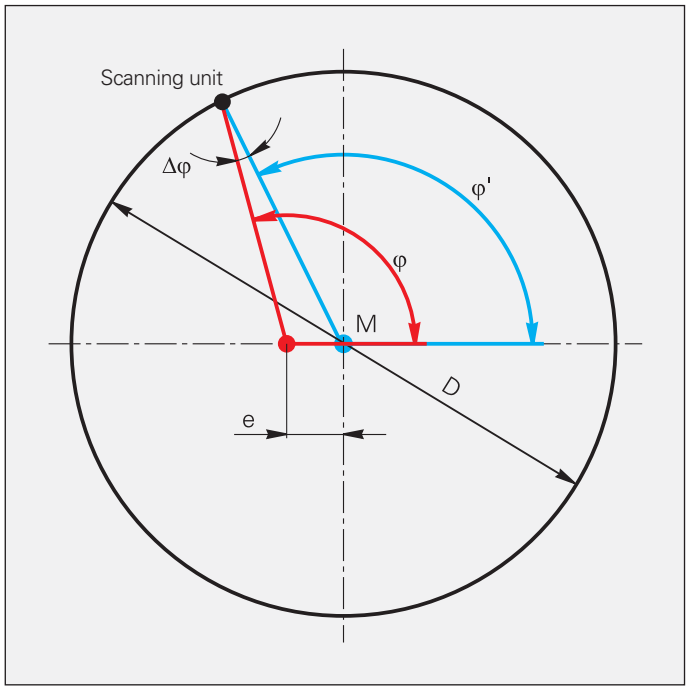

Measuring error Δφ as a function of the mean graduation diameter D and the eccentricity e

M Center of graduation
φ "True" angle
φ' Scanned angle

Mechanical design types and mounting
Rotary encoders with integral bearing and stator coupling

ECN/EQN/ERN rotary encoders have integrated bearings and a mounted stator coupling. The encoder shaft is directly connected with the shaft to be measured. During angular acceleration of the shaft, the stator coupling must absorb only that torque caused by friction in the bearing. ECN/EQN/ERN rotary encoders therefore provide excellent dynamic performance and a high natural frequency.

Benefits of the stator coupling:
- No axial mounting tolerances between shaft and stator housing for ExN 1300
- High natural frequency of the coupling
- High torsional rigidity of shaft coupling
- Low mounting or installation space requirement
- Simple axial mounting

Mounting the ECN/EQN 1100 and ECN/EQN/ERN 1300
The blind hollow shaft or the taper shaft of the encoder is connected at its end through a central screw with the measured shaft. The encoder is centered on the motor shaft by the hollow shaft or taper shaft. The stator of the ECN/EQN 1100 is connected without a centering collar to a flat surface with two clamping screws. The stator of the ECN/EQN/ERN 1300 is screwed into a mating hole by an axially tightened screw.

Mounting accessories

ECN 11xx: mounting aid
For disengaging the PCB connector,
see page 34

ECN/EQN 11xx: mounting aid
For turning the encoder shaft from the back so that the positive-locking connection between the encoder and measured shaft can be found.
ID 821017-01

ERN/ECN/EQN 13xx: inspection tool
To inspect the shaft connection (fault exclusion for rotor coupling)
ID 680644-01

HEIDENHAIN recommends checking the holding torque of frictional connections (e.g. taper shaft, blind hollow shaft).

The testing tool is screwed in the M10 back-off thread on the back of the encoder. Due to the low screwing depth it does not touch the shaft-fastening screw. When the motor shaft is locked, the testing torque is applied to the extension by a torque wrench (hexagonal 6.3 mm width across flats). After any nonrecurring settling, there must not be any relative motion between the motor shaft and encoder shaft.

ECN/EQN 1100

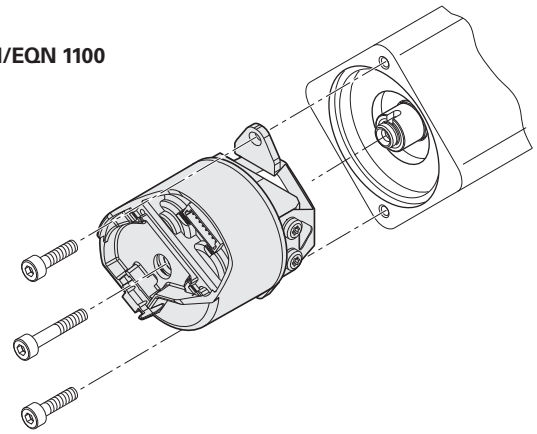

ECN/EQN/ERN 1300

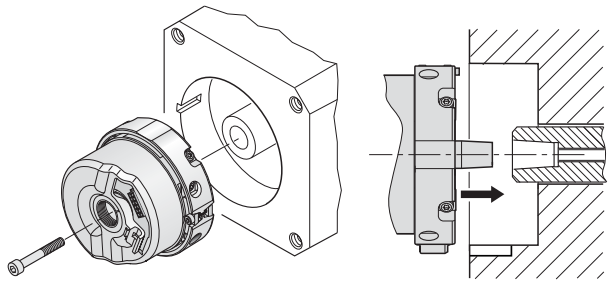





Mounting the ECN/EQN/ERN 1000 and ERN 1x23
The rotary encoder is slid by its hollow shaft onto the measured shaft and fastened by two screws or three eccentric clamps. The stator is mounted without a centering flange to a flat surface with four cap screws or with 2 cap screws and special washers.

The ECN/EQN/ERN 1000 encoders feature a blind hollow shaft, the ERN 1123 a hollow through shaft.

ECN/EQN/ERN 1000

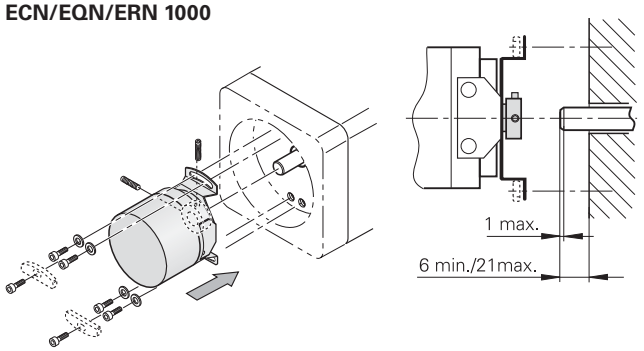

Accessory ECN/EQN/ERN 1000

Washer
For increasing the natural frequency f_N and mounting with only two screws.
ID 334653-01 (2 pieces)

Mounting the EQN/ERN 400
The EQN/ERN 400 encoders are designed for use on Siemens asynchronous motors. They serve as replacement existing Siemens rotary encoders.

The rotary encoder is slid by its hollow shaft onto the measured shaft and fastened by the clamping ring. On the stator side, the encoder is fixed by its torque support to a plane surface.

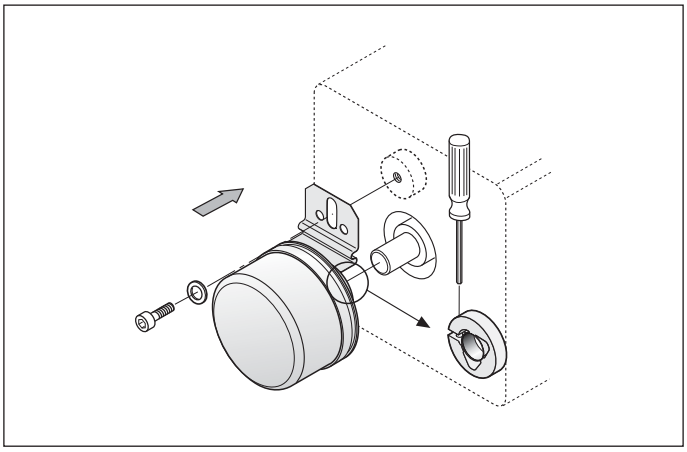

Mounting the EQN/ERN 401
The ERN 401 encoders are designed for use on Siemens asynchronous motors. They serve as replacement existing Siemens rotary encoders.

The rotary encoder features a solid shaft with a M8 external thread, centering taper and SW8 width across flats. It centers itself during fastening to the motor shaft. The stator coupling is fastened by special clips to the motor's ventilation grille.

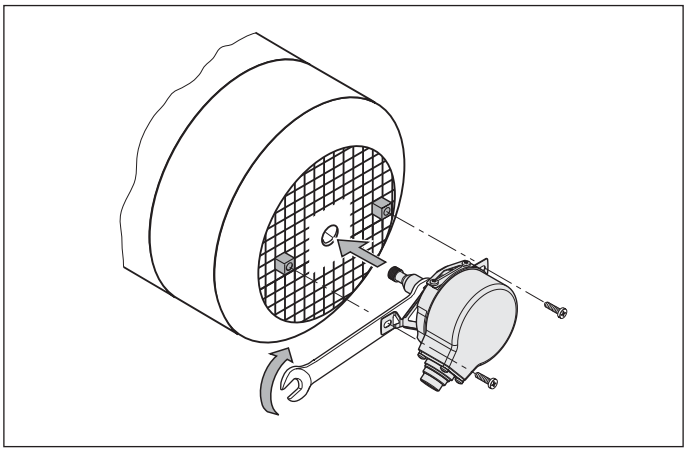

Mechanical design types and mounting
Rotary encoders without integral bearing – ECI/EBI/EQI

The **ECI/EBI/EQI** inductive encoders are without integral bearing. This means that mounting and operating conditions influence the functional reserves of the encoder. It is essential to ensure that the specified mating dimensions and tolerances are maintained in all operating conditions (see Mounting Instructions).

The application analysis must result in values within specification for all possible operating conditions (particularly under max. load and at minimum and maximum operating temperature) and under consideration of the signal amplitude (inspection of scanning gap and mounting tolerance at room temperature). This applies particularly for the measured

- maximum radial runout of the motor shaft
- maximum axial runout of the motor shaft with respect to the mounting surface
- maximum and minimum scanning gap (a) (also in combination) e.g.:
  - The length relation of the motor shaft and housing under temperature influence (T_1; T_2; α1; α2) depending on the position of the fixed bearing (b)
  - of the bearing play (C_X)
  - nondynamic shaft offsets due to load (X_1)
  - the effect of engaging motor brakes (X_2)

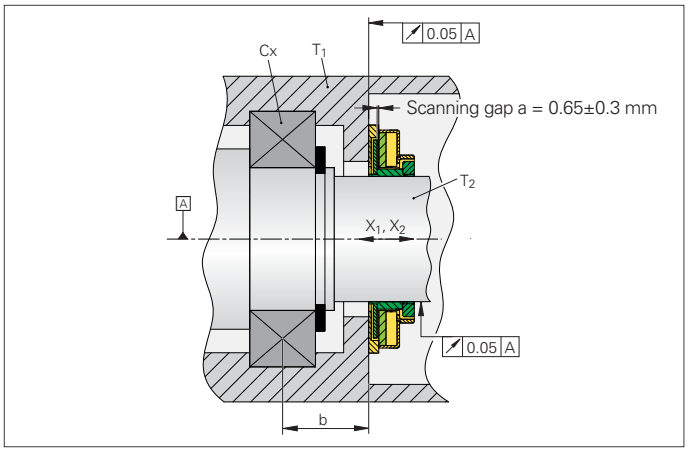

Schematic representation **ECI/EBI 100**

The **ECI/EBI 100** rotary encoders are prealigned on a flat surface and then the locked hollow shaft is slid onto the measured shaft. The encoder is fastened and the shaft clamped by axial screws.



Mounting the **ECI 119**

The **ECI/EBI/EQI 1100** inductive rotary encoders are mounted as far as possible in axial direction. The blind hollow shaft is attached with a central screw. The stator of the encoder is clamped against a shoulder by two axial screws.

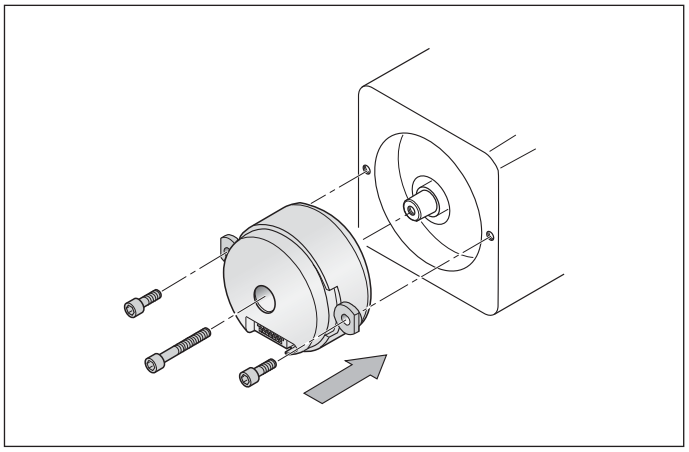

Mounting the **ECI/EQI 1100**

Accessory
Mounting aid for removing the PCB connector for ECI 1118 (EnDat 22), ECI 119, ECN 11xx
ID 592818-01

To avoid damage to the cable, the pulling force must be applied on the connector, and not on the wires. For other encoders, use tweezers or the mounting aid if necessary.



Mounting aid for PCB connector

Permissible scanning gap
The scanning gap between the rotor and stator is predetermined by the mounting situation. Later adjustment is possible only by inserting shim rings.

The maximum permitted deviation indicated in the mating dimensions applies to mounting as well as to operation. Tolerances used during mounting are therefore not available for axial motion of the shaft during operation.

Once the encoder has been mounted, the actual working gap between the rotor and stator can be measured indirectly via the signal amplitude in the rotary encoder, using the PWM 20 adjusting and testing package. The characteristic curves show the correlation between the signal amplitude and the deviation from the ideal scanning gap, depending on various ambient conditions.

The example of ECI/EQI 1100 shows the resulting deviation from the ideal scanning gap for a signal amplitude of 80 % at ideal conditions. Due to tolerances within the rotary encoder, the deviation is between +0.07 mm and +0.15 mm. This means that the maximum permissible motion of the drive shaft during operation is between –0.27 mm and +0.05 mm (green arrows).

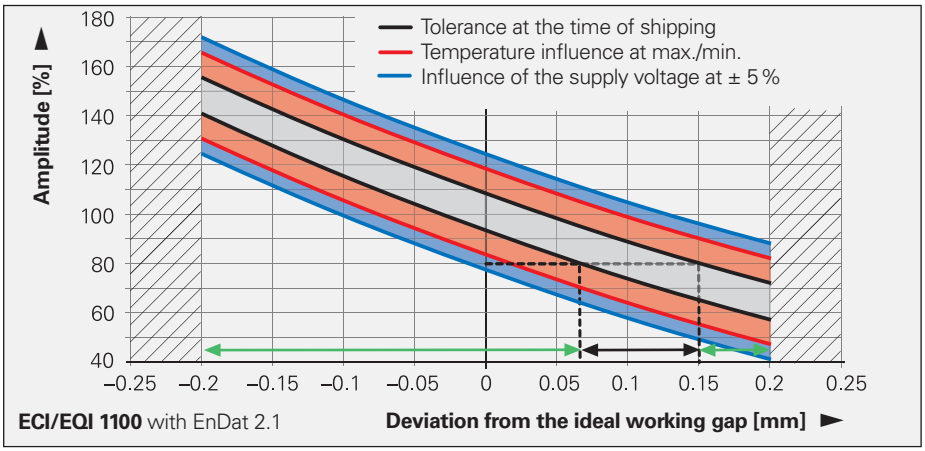

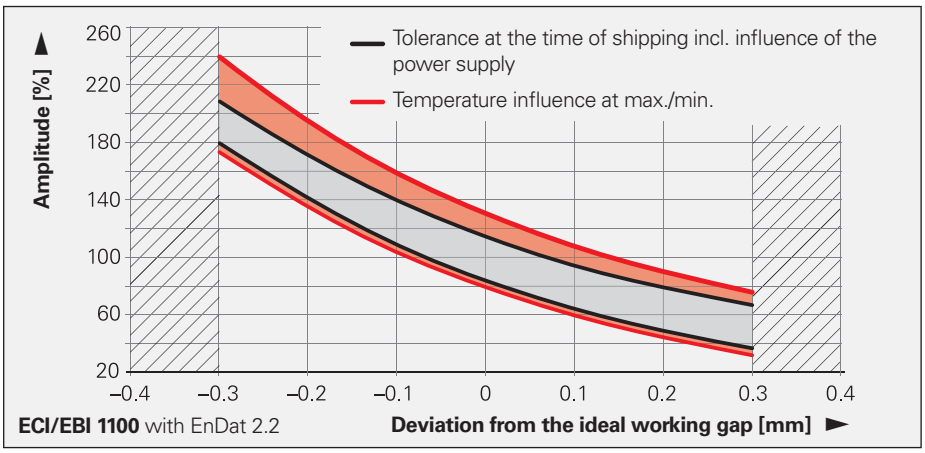

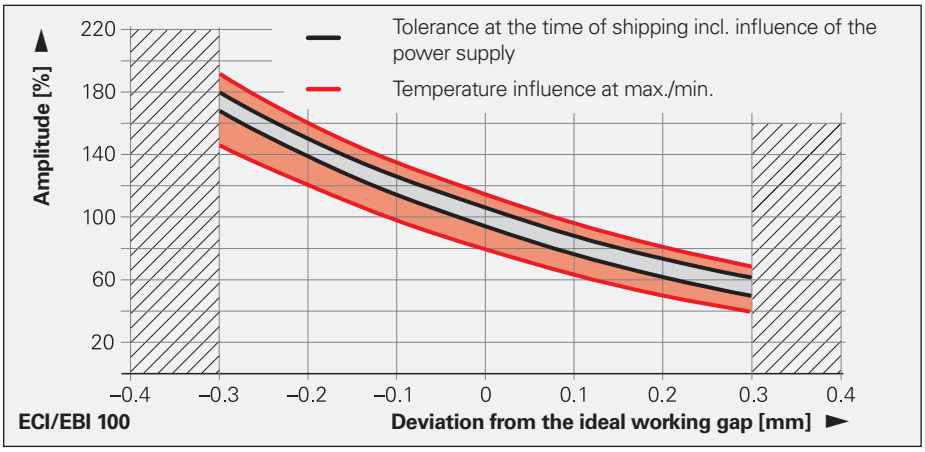

The **ECI/EQI 1300** with EnDat01 inductive rotary encoders are mechanically compatible with the ExN 1300 photoelectric encoders. The taper shaft (a bottomed hollow shaft is available as an alternative) is fastened with a central screw. The stator of the encoder is clamped by an axially tightened bolt in the location hole. The scanning gap between rotor and stator must be set during mounting.

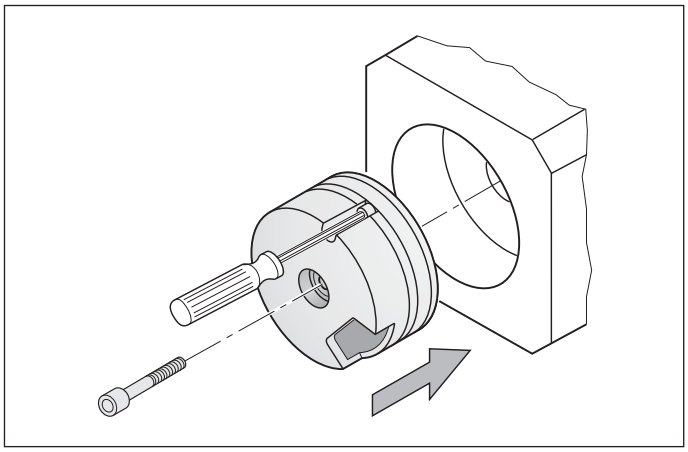

Mounting the **ECI/EQI 1300** EnDat01

The **ECI/EQI 1300** inductive rotary encoders with EnDat22 are mounted as far as possible in axial direction. The blind hollow shaft is attached with a central screw. The stator of the encoder is clamped against a shoulder by three axial screws.

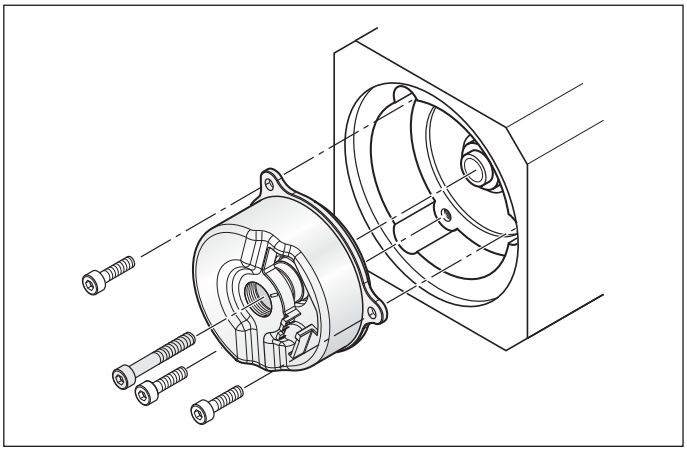

Mounting the **ECI/EQI 1300** EnDat22

Mounting accessories for ECI/EQI 1300
EnDat01

Adjustment aid for setting the scale-to-reticle gap
ID 335529-xx

Mounting aid for adjusting the rotor position to the motor emf
ID 352481-02

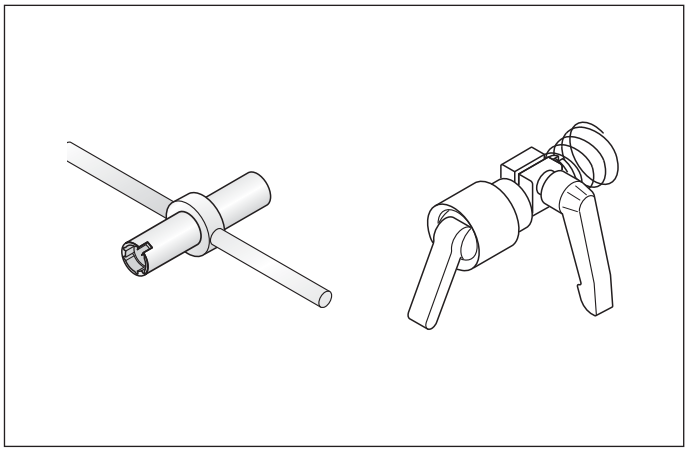

Mounting and adjusting aid for **ECI/EQI 1300** EnDat01

Accessories for ECI/EQI
For inspecting the scanning gap and adjusting the ECI/EQI 1300

Connecting cable
For EIB 741, PWM 20
Including 3 adapter connectors, 12-pin and 3 adapter connectors, 15-pin
ID 621742-01

Adapter connectors
Three connectors for replacement
12-pin: ID 528694-01
15-pin: ID 528694-02

Connecting cable
For extending the encoder cable, complete with D-sub connector (male) and D-sub coupling (female), each 15-pin
ID 675582-xx

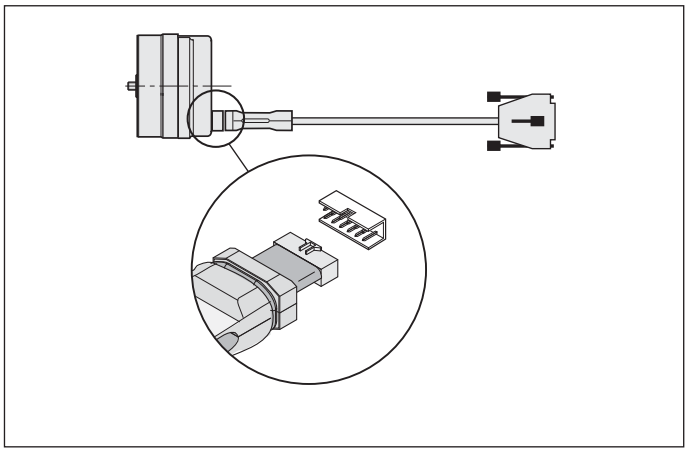

Mounting accessories for **ECI/EQI**

Rotary encoders without integral bearing – ERO

The **ERO** rotary encoders without integral bearing consist of a scanning head and a graduated disk, which must be adjusted to each other very exactly. A precise adjustment is an important factor for the attainable measuring accuracy.

The **ERO** modular rotary encoders consist of a graduated disk with hub and a scanning unit. They are particularly well suited for applications with limited installation space and negligible axial and radial runout, or for applications where friction of any type must be avoided.

In the **ERO 1200** series, the disk/hub assembly is slid onto the shaft and adjusted to the scanning unit. The scanning unit is aligned on a centering collar and fastened on the mounting surface.

The **ERO 1400** series consists of miniature modular encoders. These rotary encoders have a special built-in **mounting aid** that centers the graduated disk to the scanning unit and adjusts the gap between the disk and the scanning reticle. This makes it possible to install the encoder in a very short time. The encoder is supplied with a cover cap for protection from extraneous light.

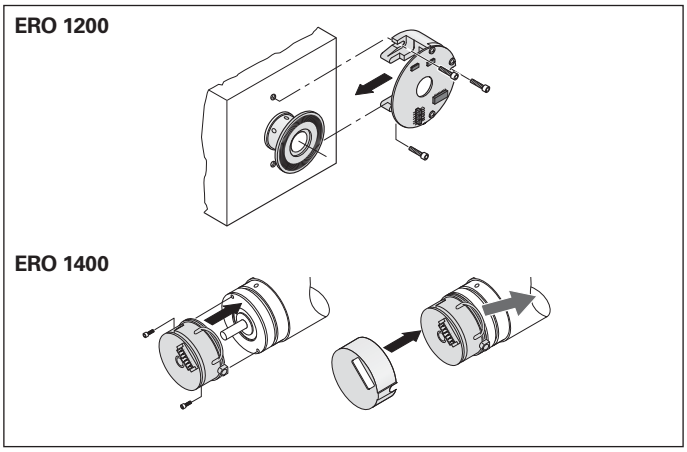

Mounting the **ERO**

Mounting accessories for ERO1400

Mounting accessories
Aid for removing the clip for optimal encoder mounting.
ID 510175-01

Accessory
Housing for ERO 14xx with axial PCB connector and central hole
ID 331727-23



Mounting accessories for **ERO 1400**

Mounting accessories

Screwdriver bits
- For HEIDENHAIN shaft couplings
- for ExN shaft and stator couplings
- For ERO shaft couplings

Width across flats	Length	ID
1.5	70 mm	350378-01
1.5 (ball head)		350378-02
2		350378-03
2 (ball head)		350378-04
2.5		350378-05
3 (ball head)		350378-08
4		350378-07
4 (with dog point)[1)]		350378-14
	150 mm	756768-44
TX8	89 mm	350378-11
	152 mm	350378-12
TX15	70 mm	756768-42

[1)] For screws as per DIN 6912 (low head screw with pilot recess)

Screwdriver
Adjustable torque

0.2 Nm to 1.2 Nm	ID 350379-04
1 Nm to 5 Nm	ID 350379-05



General information
Aligning the rotary encoders to the motor EMF

Synchronous motors require information on the rotor position immediately after switch-on. This information can be provided by rotary encoders with additional commutation signals, which provide relatively rough position information. Also suitable are absolute rotary encoders in multiturn and singleturn versions, which transmit the exact position information within a few angular seconds (see also *Electronic commutation with position encoders*). When these encoders are mounted, the rotor positions of the encoder must be assigned to those of the motor in order to ensure the most constant possible motor current. Inadequate assignment to the motor EMF will cause loud motor noises and high power loss.

Rotary encoders with integral bearing
First, the rotor of the motor is brought to a preferred position by the application of a DC current. **Rotary encoders with commutation signals** are aligned approximately—for example with the aid of the line markers on the encoder or the reference mark signal—and mounted on the motor shaft. The fine adjustment is quite easy with a PWM 9 phase angle measuring device (see *HEIDENHAIN Measuring and Testing Devices*): the stator of the encoder is turned until the PWM 9 displays, for example, the value zero as the distance from the reference mark. **Absolute rotary encoders** are at first mounted as a complete unit. Then the preferred position of the motor is assigned the value zero. The adjusting and testing package (see *HEIDENHAIN Measuring and Testing Devices*) serve this purpose. They feature the complete range of EnDat functions and make it possible to shift datums, set write protection against unintentional changes in saved values, and use further inspection functions.

Rotary encoders without integral bearing
ECI/EQI rotary encoders are mounted as complete units and then adjusted with the aid of the adjusting and testing package. For the ECI/EQI with pure serial operation, electronic compensation is also possible: the ascertained compensation value can be saved in the encoder and read out by the control electronics to calculate the position value. ECI/EQI 1300 also permit manual alignment. The central screw is loosened again and the encoder rotor is turned with the mounting aid to the desired position until, for example, an absolute value of approximately zero appears in the position data.

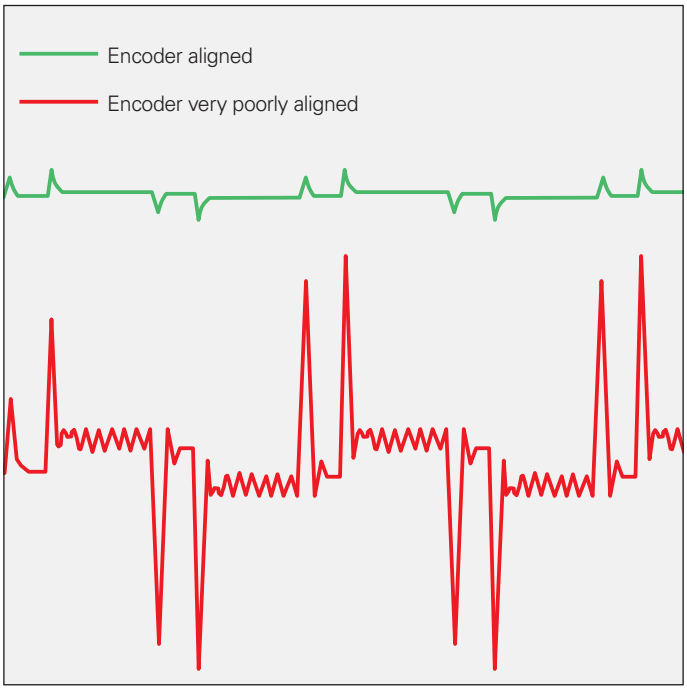

Motor current of adjusted and very poorly adjusted rotary encoder

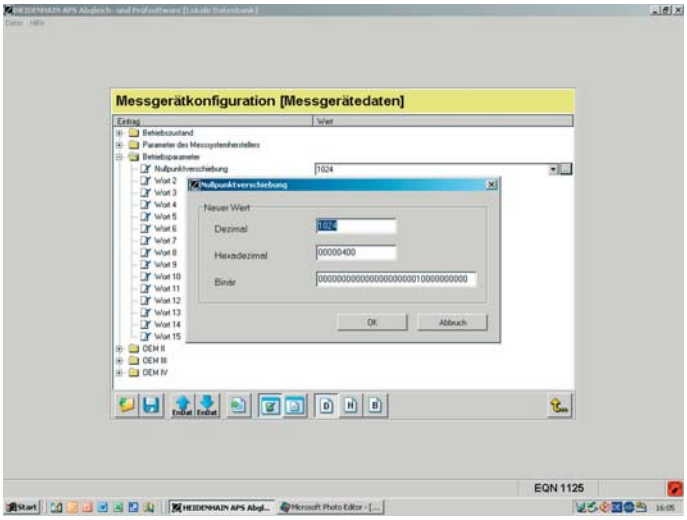

Aligning the rotary encoder to the motor EMF with the aid of the adjusting and testing software

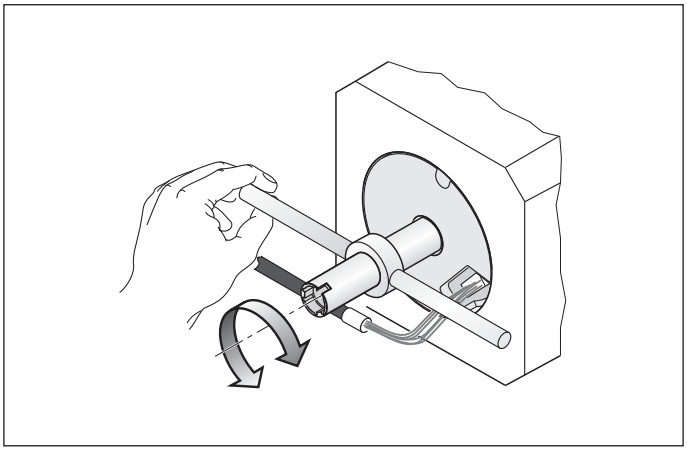
Manual alignment of ECI/EQI 1300

General mechanical information

UL certification
All rotary encoders in this brochure comply with the UL safety regulations for the USA and the "CSA" safety regulations for Canada.

Acceleration
Encoders are subject to various types of acceleration during operation and mounting.

- **Vibration**
  The encoders are qualified on a test stand to operate with the specified acceleration values at frequencies from 55 to 2000 Hz in accordance with EN 60068-2-6. However, if the application or poor mounting causes long-lasting resonant vibration, it can limit performance or even damage the encoder. **Comprehensive tests of the entire system are required.**
- **Shock**
  The encoders are qualified on a test stand for non-repetitive semi-sinusoidal shock to operate with the specified acceleration values and duration in accordance with EN 60068-2-27. This does not include **permanent shock loads**, which **must be tested in the application.**
- The **maximum angular acceleration** is 10^5 rad/s^2 (DIN 32878). This is the highest permissible acceleration at which the rotor will rotate without damage to the encoder. The angular acceleration actually attainable depends on the shaft connection. A sufficient safety factor is to be determined through system tests.

Other values for rotary encoders with functional safety are provided in the corresponding product information documents.

Humidity
The max. permissible relative humidity is 75 %. 95 % is permissible temporarily. Condensation is not permissible.

Magnetic fields
Magnetic fields > 30 mT can impair the proper function of encoders. If required, please contact HEIDENHAIN, Traunreut.

RoHS
HEIDENHAIN has tested the products for harmlessness of the materials as per European Directives 2002/95/EC (RoHS) and 2002/96/EC (WEEE). For a Manufacturer's Declaration on RoHS, please refer to your sales agency.

Natural frequencies
The rotor and the couplings of ROC/ROQ/ROD and RIC/RIQ rotary encoders, as also the stator and stator coupling of ECN/EQN/ERN rotary encoders, form a single vibrating spring-mass system.

The **natural frequency f_N** should be as high as possible. A prerequisite for the highest possible natural frequency on **ROC/ROQ/ROD** or **RIC/RIQ rotary encoders** is the use of a diaphragm coupling with a high torsional rigidity C (see *Shaft couplings*).

$$f_N = \frac{1}{2 \cdot \pi} \cdot \sqrt{\frac{C}{I}}$$

f_N: Natural frequency of the coupling in Hz
C: Torsional rigidity of the coupling in Nm/rad
I: Moment of inertia of the rotor in kgm^2

ECN/EQN/ERN rotary encoders with their stator couplings form a vibrating spring-mass system whose **natural frequency f_N** should be as high as possible. If radial and/or axial acceleration forces are added, the rigidity of the encoder bearings and the encoder stators is also significant. If such loads occur in your application, HEIDENHAIN recommends consulting with the main facility in Traunreut.

Protection against contact (EN 60529)
After encoder installation, all rotating parts must be protected against accidental contact during operation.

Protection (EN 60529)
The degree of protection shown in the catalog is adapted to the usual mounting conditions. You will find the respective values in the Specifications. If the given degree of protection is not sufficient (such as when the encoders are mounted vertically), the encoders should be protected by suited measures such as covers, labyrinth seals, or other methods. Splash water must not contain any substances that would have harmful effects on the encoder parts.

Noise emission
Running noise can occur during operation, particularly when encoders with integral bearing or multiturn rotary encoders (with gears) are used. The intensity may vary depending on the mounting situation and the speed.

Conditions for longer storage times
HEIDENHAIN recommends the following in order to make storage times beyond 12 months possible:

- Leave the encoders in the original packaging.
- The storage location should be dry, free of dust, and temperature-regulated. It should also not be subjected to vibrations, mechanical shock or chemical influences.
- For encoders with integral bearing, every 12 months (e.g. as run-in period) the shaft should be turned at low speeds, without axial or radial loads, so that the bearing lubricant redistributes itself evenly again.

Expendable parts
Encoders from HEIDENHAIN are designed for a long service life. Preventive maintenance is not required. However, they contain components that are subject to wear, depending on the application and manipulation. These include in particular cables with frequent flexing.

Other such components are the bearings of encoders with integral bearing, shaft sealing rings on rotary and angle encoders, and sealing lips on sealed linear encoders.

Insulation
The encoder housings are isolated against internal circuits.

Rated surge voltage: 500 V
preferred value as per DIN EN 60664-1
overvoltage category II,
contamination level 2 (no electrically conductive contamination)

System tests
Encoders from HEIDENHAIN are usually integrated as components in larger systems. Such applications require **comprehensive tests of the entire system** regardless of the specifications of the encoder.

The specifications shown in this brochure apply to the specific encoder, not to the complete system. Any operation of the encoder outside of the specified range or for any other than the intended applications is at the user's own risk.

Mounting
Work steps to be performed and dimensions to be maintained during mounting are specified solely in the mounting instructions supplied with the unit. All data in this catalog regarding mounting are therefore provisional and not binding; they do not become terms of a contract.

Changes to the encoder
The correct operation and accuracy of encoders from HEIDENHAIN is ensured only if they have not been modified. Any changes, even minor ones, can impair the operation and reliability of the encoders, and result in a loss of warranty. This also includes the use of additional retaining compounds, lubricants (e.g. for screws) or adhesives not explicitly prescribed. In case of doubt, we recommend contacting HEIDENHAIN in Traunreut.

Temperature ranges
For the unit in its packaging, the **storage temperature range** is –30 °C to 80 °C (HR 1120: –30 °C to 70 °C). The **operating temperature range** indicates the temperatures that the encoder may reach during operation in the actual installation environment. The function of the encoder is guaranteed within this range (DIN 32878). The operating temperature is measured on the face of the encoder flange (see dimension drawing) and must not be confused with the ambient temperature.

The temperature of the encoder is influenced by:
- Mounting conditions
- The ambient temperature
- Self-heating of the encoder

The self-heating of an encoder depends both on its design characteristics (stator coupling/solid shaft, shaft sealing ring, etc.) and on the operating parameters (rotational speed, power supply). Temporarily increased self-heating can also occur after very long breaks in operation (of several months). Please take a two-minute run-in period at low speeds into account. Higher heat generation in the encoder means that a lower ambient temperature is required to keep the encoder within its permissible operating temperature range.

These tables show the approximate values of self-heating to be expected in the encoders. In the worst case, a combination of operating parameters can exacerbate self-heating, for example a 30 V power supply and maximum rotational speed. Therefore, the actual operating temperature should be measured directly at the encoder if the encoder is operated near the limits of permissible parameters. Then suitable measures should be taken (fan, heat sinks, etc.) to reduce the ambient temperature far enough so that the maximum permissible operating temperature will not be exceeded during continuous operation.

For high speeds at maximum permissible ambient temperature, special versions are available on request with reduced degree of protection (without shaft seal and its concomitant frictional heat).

Self-heating at supply voltage (approx.)	**15 V**	**30 V**
ERN/ROD	+ 5 K	+ 10 K
ECN/EQN/ROC/ ROQ/RIC/RIQ	+ 5 K	+ 10 K

Heat generation at speed n_{max}	
Solid shaft **ROC/ROQ/ROD/ RIC/RIQ**	Approx. + 5 K with IP 64 protection Approx. + 10 K with IP 66 protection
Blind hollow shaft **ECN/EQN/ ERN 400**	Approx. + 30 K with IP 64 protection Approx. + 40 K with IP 66 protection
ECN/EQN/ ERN 1000	Approx. + 10 K
Hollow through shaft **ECN/ERN 100 ECN/EQN/ERN 400**	Approx. + 40 K with IP 64 protection Approx. + 50 K with IP 66 protection

An encoder's typical self-heating values depend on its design characteristics at maximum permissible speed. The correlation between rotational speed and heat generation is nearly linear.

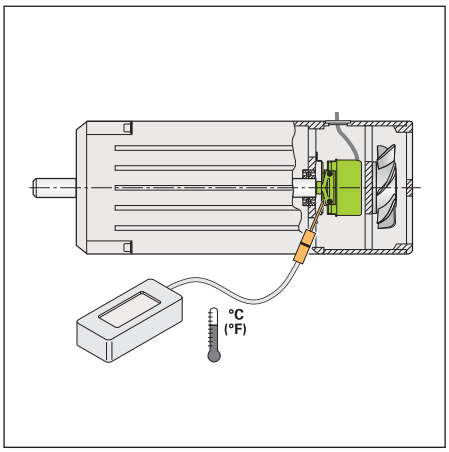

Measuring the actual operating temperature at the defined measuring point of the rotary encoder (see *Specifications*)

Temperature measurement in motors

In order to protect a motor from an excessive load, the motor manufacturer usually installs a temperature sensor near the motor coil. In classic applications, the values from the temperature sensor are led via two separate lines to the subsequent electronics, where they are evaluated. With HEIDENHAIN encoders for servo drives, the temperature sensor can be connected to the encoder cable inside the motor housing, and the values transmitted via the encoder cable. This means that no separate lines from the motor to the drive controller are necessary.

Integrated temperature evaluation
Besides the integrated temperature sensor (accuracy at 125 °C: approx. ± 4 K for ECN/EQN 1300 or approx. ± 1 K for ECI/EQI 1300), encoders with EnDat 22 interface also permit connection of an external temperature sensor (not with ECI 1118). The encoder also evaluates the external sensor signal. The digitized temperature value is transmitted purely serially without additional lines via the EnDat interface as additional information.

Connectable temperature sensors
The temperature evaluation within the rotary encoder is designed for a KTY 84-130 PTC thermistor. If other temperature sensors are used, then the temperature must be converted according to the resistance curve. In the example shown, the temperature of 100 °C reported via the EnDat interface is actually 25 °C if a KTY 83-110 is used as temperature sensor.

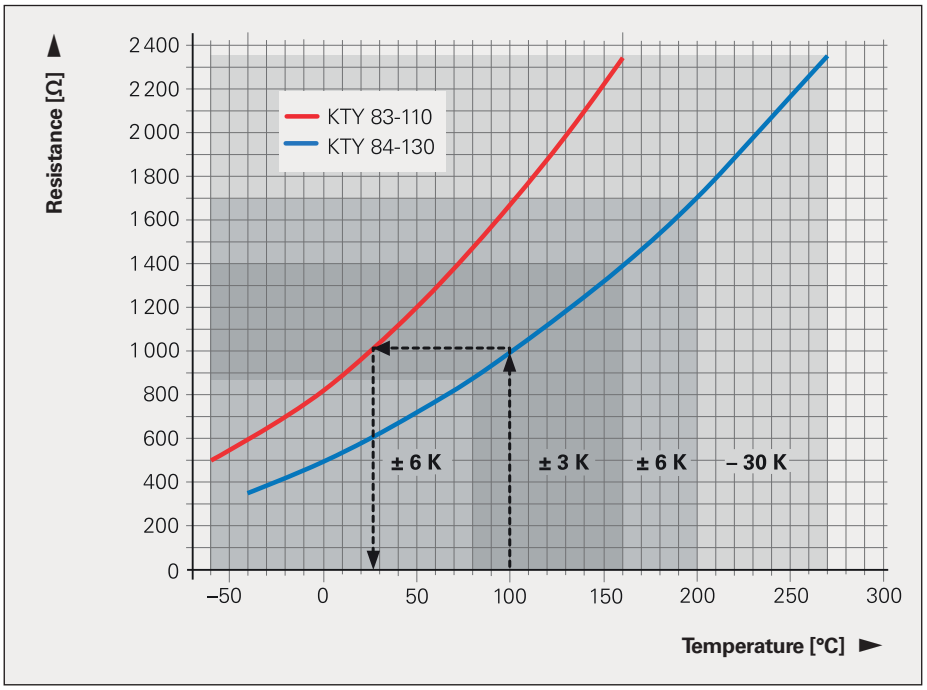

Relationship between the temperature and resistance value for KTY 84-130 and KTY 83-110 indicating the accuracy of temperature measurement and with a conversion example

Resistor KTY 84-130	Value in additional datum 1	Temperature
353 Ω	2331	-40 °C
595 Ω	2981	25 °C
713 Ω	3231	50 °C
872 Ω	3531	80 °C
990 Ω	3731	100 °C
1181 Ω	4031	130 °C
1392 Ω	4331	160 °C
1702 Ω	4731	200 °C
2141 Ω	5231	250 °C
2332 Ω	5431	270 °C

Relationship of resistance values for KTY 84-130, values in the additional datum 1 of the EnDat interface, and temperature

Due to the low measuring current (approx. 1 mA instead of 2 mA), the resistance value were corrected downward compared with the data sheet specification of KTY 184-130 (e.g. 990 Ω instead of 1000 Ω).

Information for the connection of an external temperature sensor

- The external temperature sensor must comply with the following prerequisites as per EN 61800-5-1:
  – Voltage class A
  – Contamination level 2
  – Overvoltage category 3
- Only connect passive temperature sensors
- The connections for the temperature sensor are galvanically connected with the encoder electronics.
- Depending on the application, the temperature sensor assembly (sensor + cable assembly) is to be mounted with double or reinforced insulation from the environment.
- Accuracy of temperature measurement depends on temperature range.
- The following applies for an ideal sensor:
  –40 °C to 80 °C: ± 6 K
  80 °C to 160 °C ± 3 K
  160 °C to 200 °C: ± 6 K
  200 °C to 270 °C: +0 K/–30 K
- Note the tolerance of the temperature sensor
- The transmitted temperature value is not a safe value in the sense of functional safety.
- The motor manufacturer is responsible for the quality and accuracy of the temperature sensor, as well as for ensuring that electrical safety is maintained.

Specifications of the evaluation	
Resolution	0.1 K
Power supply of sensor	3.3 V over dropping resistor R_V = 2 kΩ
Measuring current typically	1.2 mA at 25 °C (595 Ω) 1.0 mA at 100 °C (990 Ω)
Total delay of temperature evaluation[1)]	160 ms max.
Cable length[2)] with wire cross section of 0.14 mm^2	≤ 1 m

[1)] Filter time constants and conversion time are included. The time constant/response delay of the temperature sensor and the time lag for reading out data through the device interface are not included here.

[2)] Limit of cable length due to interference. The measuring error due to the line resistance is negligible.

ECN/EQN 1100 series

Absolute rotary encoders
- **75A stator coupling for plane surface**
- **Blind hollow shaft**
- **Encoders available with functional safety**



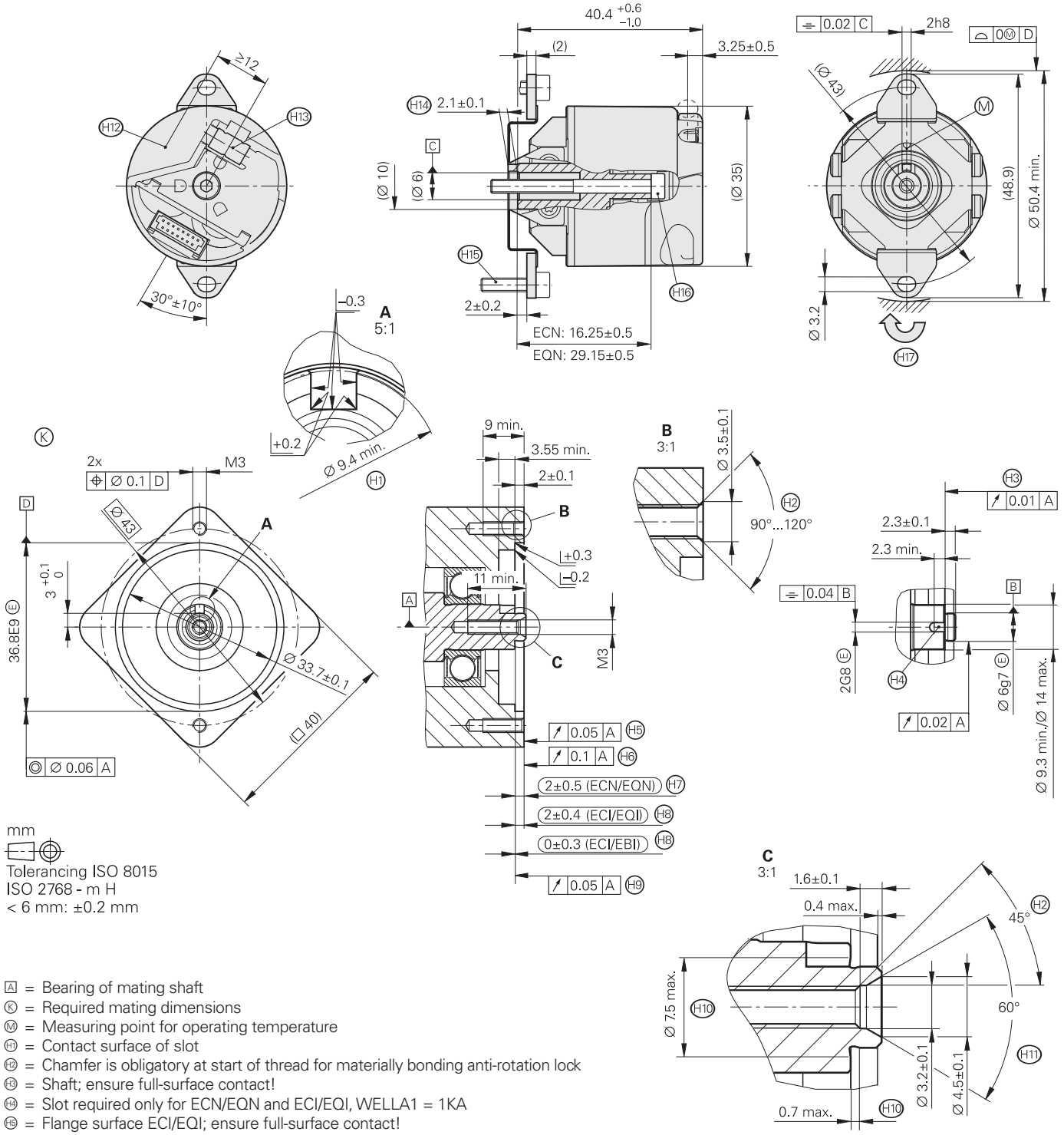

mm

Tolerancing ISO 8015
ISO 2768 - m H
< 6 mm: ±0.2 mm

A = Bearing of mating shaft
K = Required mating dimensions
M = Measuring point for operating temperature
H1 = Contact surface of slot
H2 = Chamfer is obligatory at start of thread for materially bonding anti-rotation lock
H3 = Shaft; ensure full-surface contact!
H4 = Slot required only for ECN/EQN and ECI/EQI, WELLA1 = 1KA
H5 = Flange surface ECI/EQI; ensure full-surface contact!
H6 = Coupling surface
H7 = Maximum permissible deviation between shaft and coupling surface. Compensation of mounting tolerances and thermal expansion for which ±0.15 mm of dynamic motion permitted is permitted
H8 = Maximum permissible deviation between shaft and flange surfaces. Compensation of mounting tolerances and thermal expansion
H9 = Exl flange surface; ensure full-surface contact!
H10 = Undercut
H11 = Possible centering hole
H12 = Vibration measuring point
H13 = Cable outlet for cables with crimp sleeve Ø 4.3±0.1 – 7 long
H14 = Positive-fit element. Ensure correct engagement in slot H4, e.g. by measuring the device overhang
H15 = Screw, ISO 4762 M3x10 – 8.8 with patch coating (not included in delivery). Tightening torque 1.15±0.05 Nm
H16 = Screw ISO 4762 with patch coating, ECN: M3x22–8.8, EQN: M3x35–8.8 (not included in delivery). Tightening torque 1.15±0.05 Nm
H17 = Direction of shaft rotation for output signals as per the interface description

	Absolute			
	ECN 1113	**ECN 1123** Functional Safety	**EQN 1125**	**EQN 1135** Functional Safety
Interface	EnDat 2.2			
Ordering designation	EnDat01	EnDat22	EnDat01	EnDat22
Position values/rev	8192 (13 bits)	8388608 (23 bits)	8192 (13 bits)	8388608 (23 bits)
Revolutions	–		4096 (12 bits)	
Elec. permissible speed/ Deviation[2]	4000 min^{-1}/± 1 LSB 12000 min^{-1}/± 16 LSB	12000 min^{-1} (for contin. position value)	4000 min^{-1}/± 1 LSB 12000 min^{-1}/± 16 LSB	12000 min^{-1} (for contin. position value)
Calculation time t_{cal} Clock frequency	≤ 9 µs ≤ 2 MHz	≤ 7 µs ≤ 8 MHz	≤ 9 µs ≤ 2 MHz	≤ 7 µs ≤ 8 MHz
Incremental signals	~ 1 V_{PP}[1]	–	~ 1 V_{PP}[1]	–
Line count	512	–	512	–
Cutoff frequency –3 dB	≥ 190 kHz	–	≥ 190 kHz	–
System accuracy	± 60“			
Electrical connection	Via PCB connector, 15-pin	Via PCB connector, 15-pin[3]	Via PCB connector, 15-pin	Via PCB connector, 15-pin[3]
Voltage supply	3.6 V to 14 V DC			
Power consumption (maximum)	*3.6 V:* ≤600 mW *14 V:* ≤ 700 mW		*3.6 V:* ≤ 700 mW *14 V:* ≤ 800 mW	
Current consumption (typical)	*5 V:* 85 mA (without load)		*5 V:* 105 mA (without load)	
Shaft	Blind hollow shaft Ø 6 mm with positive fit element			
Mech. permiss. speed n	12000 min^{-1}			
Starting torque	≤ 0.001 Nm (at 20 °C)		≤ 0.002 Nm (at 20 °C)	
Moment of inertia of rotor	Approx. 0.4 · 10^{-6} kgm^2			
Permissible axial motion of measured shaft	± 0.5 mm			
Vibration 55 to 2000 Hz **Shock** 6 ms	≤ 200 m/s^2 (EN 60068-2-6) ≤ 1000 m/s^2 (EN 60068-2-27)			
Max. operating temp.	115 °C			
Min. operating temp.	–40 °C			
Protection EN 60529	IP 40 when mounted			
Weight	Approx. 0.1 kg			

[1] Restricted tolerances

Signal amplitude:	0.80 to 1.2 V_{PP}
Asymmetry:	0.05
Amplitude ratio:	0.9 to 1.1
Phase angle:	90° ± 5° elec.

[2] Velocity-dependent deviations between the absolute and incremental signals

[3] With connection for temperature sensor, evaluation optimized for KTY 84-130

Functional safety available for ECN 1123 and EQN 1135. For dimensions and specifications, see the Product Information document.

ERN 1023

Incremental rotary encoders
- **Stator coupling for plane surface**
- **Blind hollow shaft**
- **Block commutation signals**



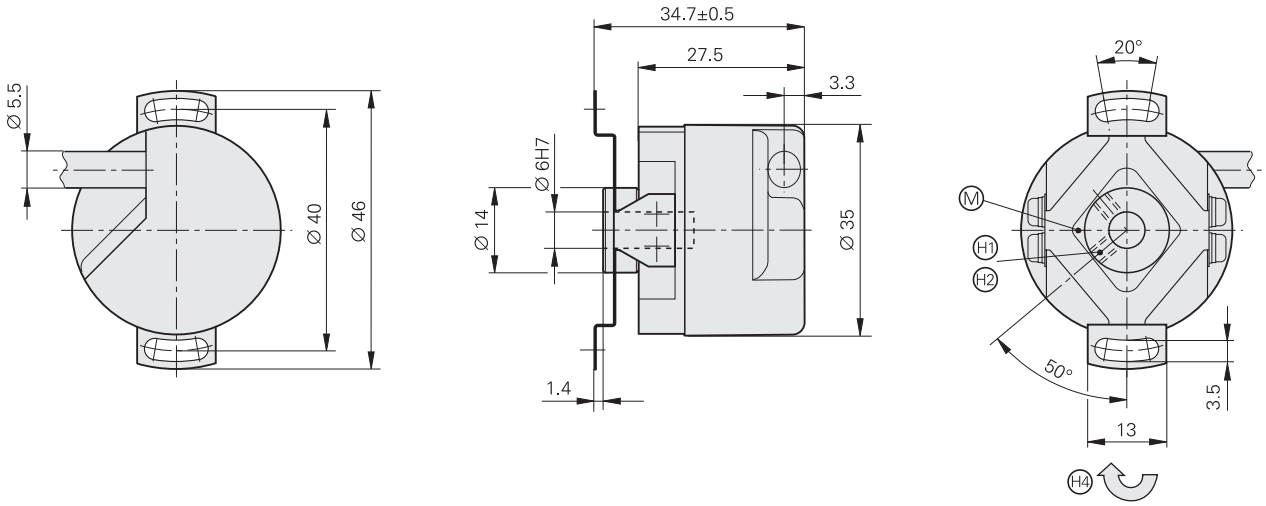

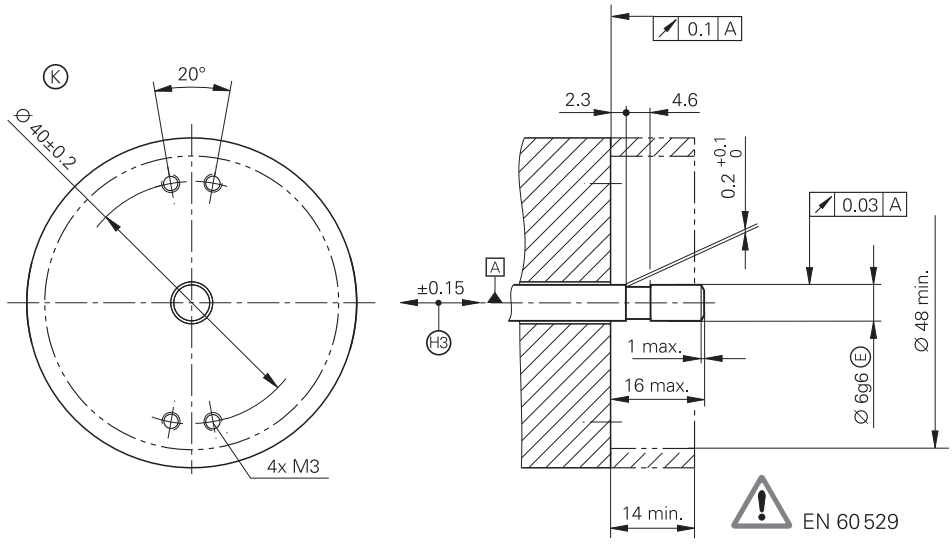

mm

Tolerancing ISO 8015
ISO 2768 - m H
< 6 mm: ±0.2 mm

A = Bearing of mating shaft
M = Measuring point for operating temperature
K = Required mating dimensions
H1 = 2 screws in clamping ring. Tightening torque: 0.6 ± 0.1 Nm, width A/F: 1.5
H2 = Reference mark position ± 10°
H3 = Compensation of mounting tolerances and thermal expansion, no dynamic motion permitted
H4 = Direction of shaft rotation for output signals according to interface description

	ERN 1023	
Interface	⊓⊔TTL	
Signal periods/rev*	**500** **512** 600	**1000** **1024** 1250 **2000** **2048** **2500** 4096 5000 8192
Reference mark	One	
Scanning frequency Edge separation *a*	≤ 300 kHz ≥ 0.41 µs	
Commutation signals[1]	⊓⊔TTL (3 commutation signals U, V, W)	
Width*	2 x 180° (C01); 3 x 120° (C02); **4 x 90° (C03)**	
System accuracy	± 260″	± 130″
Electrical connection*	Cable **1 m,** 5 m, without coupling	
Voltage supply	5 V DC ± 0.5 V	
Current consumption (without load)	≤ 70 mA	
Shaft	Blind hollow shaft D = 6 mm	
Mech. permiss. speed n	≤ 6000 min^{-1}	
Starting torque	≤ 0.005 Nm (at 20 °C)	
Moment of inertia of rotor	0.5 · 10^{-6} kgm^2	
Permissible axial motion of measured shaft	± 0.15 mm	
Vibration 25 to 2000 Hz **Shock** 6 ms	≤ 100 m/s^2 (EN 60068-2-6) ≤ 1000 m/s^2 (EN 60068-2-27)	
Max. operating temp.	90 °C	
Min. operating temp.	*Fixed cable:* –20 °C *Moving cable:* –10 °C	
Protection EN 60 529	IP 64	
Weight	Approx. 0.07 kg (without cable)	

Bold: These preferred versions are available on short notice
***** Please select when ordering
[1] Three square-wave signals with signal periods of 90°, 120° or 180° mechanical phase shift, see Commutation signals for block commutation in the *Interfaces* catalog

ERN 1123

Incremental rotary encoders
- **Stator coupling for plane surface**
- **Hollow through shaft**
- **Block commutation signals**



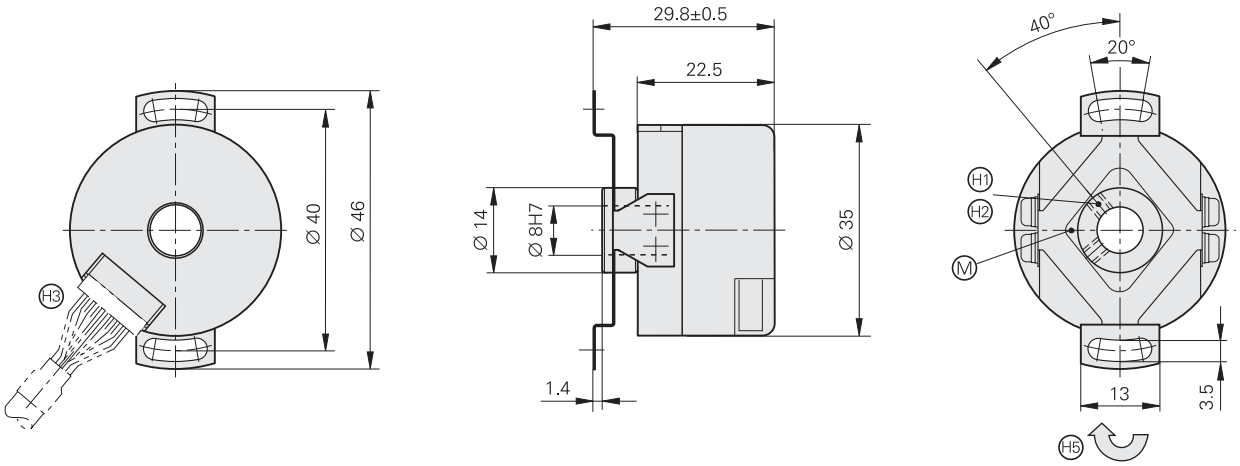

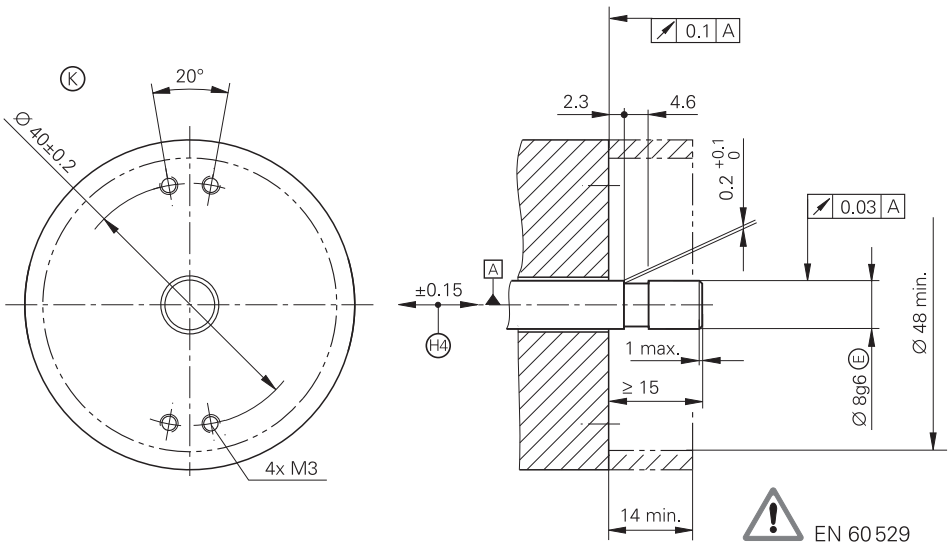

mm

Tolerancing ISO 8015
ISO 2768 - m H
< 6 mm: ±0.2 mm

A = Bearing of mating shaft
K = Required mating dimensions
M = Measuring point for operating temperature
H1 = 2 screws in clamping ring. Tightening torque: 0.6 ± 0.1 Nm, width A/F: 1.5
H2 = Reference mark position ± 10°
H3 = 15-pin JAE connector
H4 = Compensation of mounting tolerances and thermal expansion, no dynamic motion permitted
H5 = Direction of shaft rotation for output signals according to interface description

	ERN 1123	
Interface	⊓⊔TTL	
Signal periods/rev*	**500** **512** 600	**1000** **1024** 1250 **2000** **2048** **2500** 4096 5000 8192
Reference mark	One	
Scanning frequency Edge separation *a*	≤ 300 kHz ≥ 0.41 µs	
Commutation signals[1]	⊓⊔TTL (3 commutation signals U, V, W)	
Width*	2 x 180° (C01); 3 x 120° (C02); **4 x 90° (C03)**	
System accuracy	± 260″	± 130″
Electrical connection	Via PCB connector, 15-pin	
Voltage supply	DC 5 V ± 0.5 V	
Current consumption (without load)	≤ 70 mA	
Shaft	Hollow through shaft ∅ 8 mm	
Mech. permiss. speed n	≤ 6000 min^{-1}	
Starting torque	≤ 0.005 Nm (at 20 °C)	
Moment of inertia of rotor	0.5 · 10^{-6} kgm^2	
Permissible axial motion of measured shaft	± 0.15 mm	
Vibration 25 to 2000 Hz **Shock** 6 ms	≤ 100 m/s^2 (EN 60068-2-6) ≤ 1000 m/s^2 (EN 60068-2-27)	
Max. operating temp.	90 °C	
Min. operating temp.	–20 °C	
Protection EN 60 529	IP 00[2]	
Weight	Approx. 0.06 kg	

Bold: These preferred versions are available on short notice
***** Please select when ordering
[1] Three square-wave signals with signal periods of 90°, 120° or 180° mechanical phase shift, see Commutation signals for block commutation in the *Interfaces* catalog
[2] CE compliance of the complete system must be ensured by taking the correct measures during installation.

ECN/EQN 1300 series



Absolute rotary encoders
- **07B stator coupling with anti-rotation element for axial mounting**
- **Taper shaft 65B**
- **Encoders available with functional safety**
- **Fault exclusion for rotor and stator coupling as per EN 61800-5-2 possible**

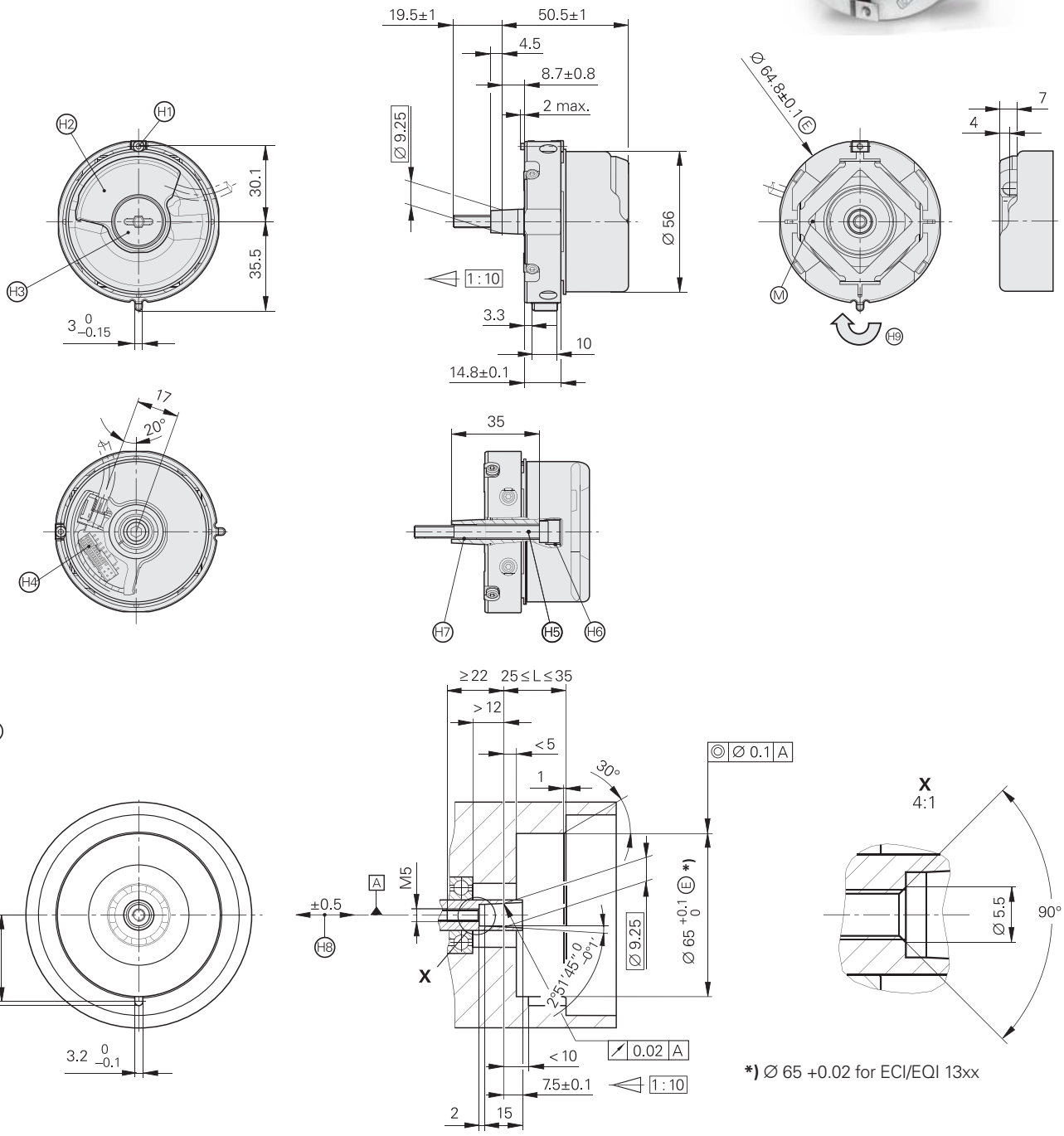

***)** Ø 65 +0.02 for ECI/EQI 13xx

mm

Tolerancing ISO 8015
ISO 2768 - m H
< 6 mm: ±0.2 mm

A = Bearing of mating shaft
K = Required mating dimensions
M = Measuring point for operating temperature
H1 = Clamping screw for coupling ring, width A/F 2, tightening torque 1.25–0.2 Nm
H2 = Die-cast cover
H3 = Screw plug, widths A/F 3 and 4, tightening torque 5+0.5 Nm
H4 = PCB connector
H5 = Self-locking screw M5 x 50 DIN 6912 SW4 (*for use in safety-related applications:* with materially bonding anti-rot. lock), tightening torque 5+0.5 Nm
H6 = M10 back-off thread
H7 = M6 back-off thread
H8 = Compensation of mounting tolerances and thermal expansion, no dynamic motion permitted
H9 = Direction of shaft rotation for output signals as per the interface description

	Absolute			
	ECN 1313	**ECN 1325** Functional Safety	**EQN 1325**	**EQN 1337** Functional Safety
Interface	EnDat 2.2			
Ordering designation	EnDat01	EnDat22	EnDat01	EnDat22
Position values/rev	8192 (13 bits)	33554432 (25 bits)	8192 (13 bits)	33554432 (25 bits)
Revolutions	–		4096 (12 bits)	
Elec. permissible speed/ Deviation[2]	*512 lines:* 5000 min^{-1}/± 1 LSB 12000 min^{-1}/± 100 LSB *2048 lines:* 1500 min^{-1}/± 1 LSB 12000 min^{-1}/± 50 LSB	15000 min^{-1} (for continuous position value)	*512 lines:* 5000 min^{-1}/± 1 LSB 12000 min^{-1}/± 100 LSB *2048 lines:* 1500 min^{-1}/± 1 LSB 12000 min^{-1}/± 50 LSB	15000 min^{-1} (for continuous position value)
Calculation time t_{cal} Clock frequency	≤ 9 µs ≤ 2 MHz	≤ 7 µs ≤ 16 MHz	≤ 9 µs ≤ 2 MHz	≤ 7 µs ≤ 16 MHz
Incremental signals	~ 1 V_{PP}[1]	–	~ 1 V_{PP}[1]	–
Line count*	512 2048	2048	512 2048	2048
Cutoff frequency –3 dB	*2048 lines:* ≥ 400 kHz *512 lines:* ≥ 130 kHz	–	*2048 lines:* ≥ 400 kHz *512 lines:* ≥ 130 kHz	–
System accuracy	*512 lines:* ± 60"; *2048 lines:* ± 20"			
Electrical connection Via PCB connector	12-pin	*Rotary encoder:* 12-pin *Thermistor*[3]*:* 4-pin	12-pin	*Rotary encoder:* 12-pin *Thermistor*[3]*:* 4-pin
Voltage supply	3.6 V to 14 V DC			
Power consumption (maximum)	*3.6 V:* ≤ 600 mW *14 V:* ≤ 700 mW		*3.6 V:* ≤ 700 mW *14 V:* ≤ 800 mW	
Current consumption (typical)	*5 V:* 85 mA (without load)		*5 V:* 105 mA (without load)	
Shaft	Taper shaft Ø 9.25 mm; taper 1:10			
Mech. permiss. speed n	≤ 15000 min^{-1}		≤ 12000 min^{-1}	
Starting torque	≤ 0.01 Nm (at 20 °C)			
Moment of inertia of rotor	2.6 · 10^{-6} kgm^2			
Natural frequency of the stator coupling	≥ 1800 Hz			
Permissible axis motion of measured shaft	± 0.5 mm			
Vibration 55 to 2000 Hz **Shock** 6 ms	≤ 300 m/s^2 [4] (EN 60068-2-6) ≤ 2000 m/s^2 (EN 60068-2-27)			
Max. operating temp.	115 °C			
Min. operating temp.	–40 °C			
Protection EN 60529	IP 40 when mounted			
Weight	Approx. 0.25 kg			

* Please select when ordering

[1] Restricted tolerances

Signal amplitude:	0.8 to 1.2 V_{PP}
Asymmetry:	0.05
Amplitude ratio:	0.9 to 1.1
Phase angle:	90° ± 5° elec.
Signal-to-noise ratio E, F:	≥ 100 mV

[2] Velocity-dependent deviations between the absolute and incremental signals

[3] Evaluation optimized for KTY 84-130

[4] As per standard for room temperature; the following applies for operating temperature Up to 100 °C: ≤ 300 m/s^2; to 115 °C: ≤ 150 m/s^2

Functional Safety for ECN 1325 and EQN 1337 upon request For dimensions and specifications see the Product Information document.

ECN/EQN 400 series



Absolute rotary encoders
- **07B stator coupling with anti-rotation element for axial mounting**
- **Taper shaft 65B**
- **Encoders available with functional safety**
- **Fault exclusion for rotor and stator coupling as per EN 61800-5-2 possible**

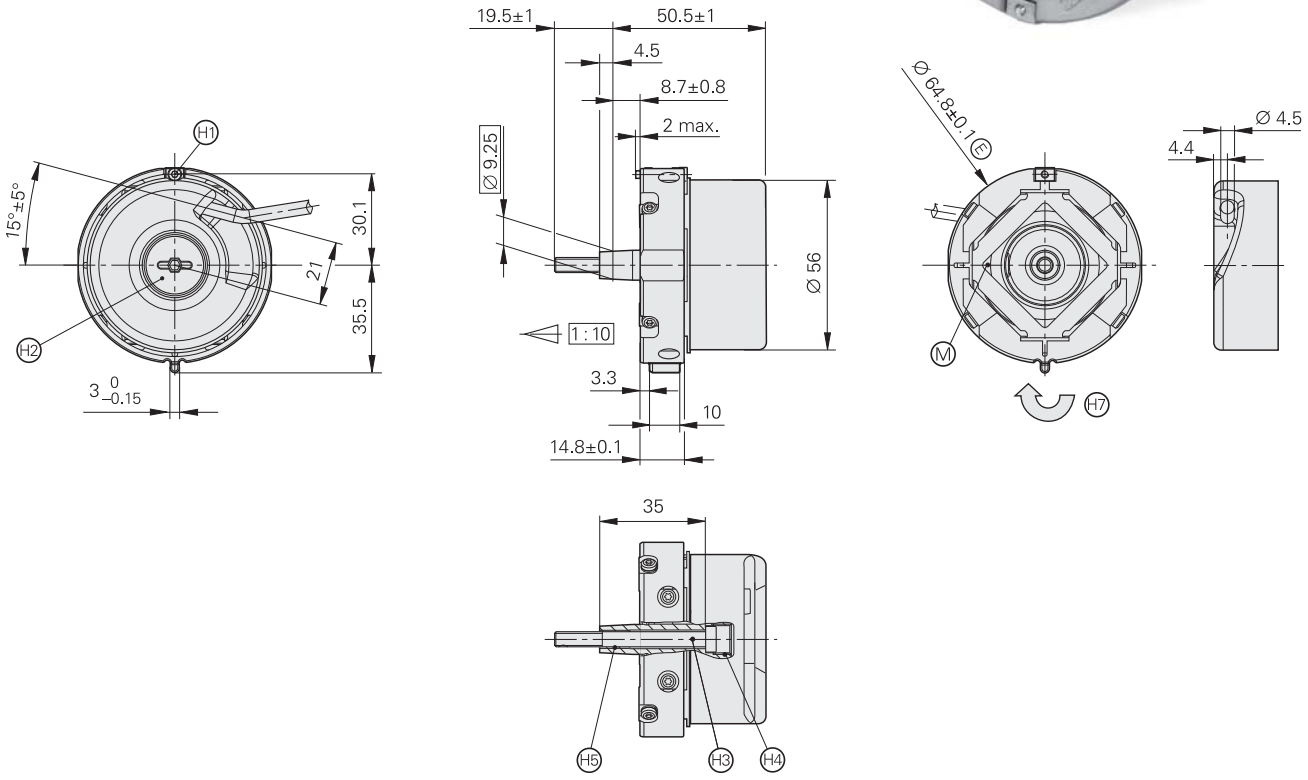

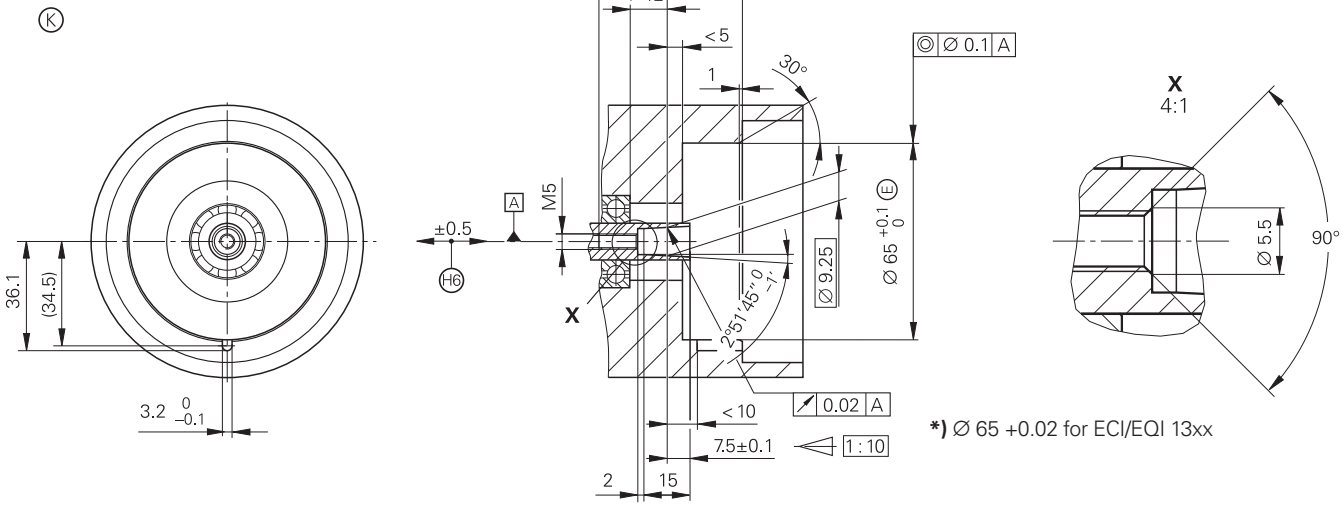

***)** Ø 65 +0.02 for ECI/EQI 13xx

mm
Tolerancing ISO 8015
ISO 2768 - m H
< 6 mm: ±0.2 mm

A = Bearing of mating shaft
K = Required mating dimensions
M = Measuring point for operating temperature
H1 = Clamping screw for coupling ring, width A/F 2, tightening torque 1.25–0.2 Nm
H2 = Screw plug, widths A/F 3 and 4, tightening torque 5+0.5 Nm
H3 = Self-locking screw M5 x 50 DIN 6912 SW4 (*for use in safety-related applications:* with materially bonding anti-rot. lock), tightening torque 5+0.5 Nm
H4 = M10 back-off thread
H5 = Back-off thread M6
H6 = Compensation of mounting tolerances and thermal expansion, no dynamic motion permitted
H7 = Direction of shaft rotation for output signals as per the interface description

	Absolute			
	ECN 413	**ECN 425** Functional Safety	**EQN 425**	**EQN 437** Functional Safety
Interface	EnDat 2.2			
Ordering designation	EnDat01	EnDat22	EnDat01	EnDat22
Position values/rev	8192 (13 bits)	33554432 (25 bits)	8192 (13 bits)	33554432 (25 bits)
Revolutions	–		4096 (12 bits)	
Elec. permissible speed/ Deviation[2]	1500 min^{-1}/± 1 LSB 12000 min^{-1}/± 50 LSB	15000 min^{-1} (for continuous position value)	1500 min^{-1}/± 1 LSB 12000 min^{-1}/± 50 LSB	15000 min^{-1} (for continuous position value)
Calculation time t_{cal} Clock frequency	≤ 9 µs ≤ 2 MHz	≤ 7 µs ≤ 8 MHz	≤ 9 µs ≤ 2 MHz	≤ 7 µs ≤ 8 MHz
Incremental signals	∿ 1 V_{PP}[1]	–	∿ 1 V_{PP}[1]	–
Line count	2048			
Cutoff frequency –3 dB	≥ 400 kHz	–	≥ 400 kHz	–
System accuracy	± 20"			
Electrical connection*	Cable 5 m, with or without M23 coupling	Cable 5 m, with M12 coupling	Cable 5 m, with or without M23 coupling	Cable 5 m, with M12 coupling
Voltage supply	3.6 V to 14 V DC			
Power consumption (maximum)	*3.6 V:* ≤ 600 mW *14 V:* ≤ 700 mW		*3.6 V:* ≤ 700 mW *14 V:* ≤ 800 mW	
Current consumption (typical)	*5 V:* 85 mA (without load)		*5 V:* 105 mA (without load)	
Shaft	Taper shaft ∅ 9.25 mm; taper 1:10			
Mech. permiss. speed n	≤ 15000 min^{-1}		≤ 12000 min^{-1}	
Starting torque	≤ 0.01 Nm (at 20 °C)			
Moment of inertia of rotor	2.6 · 10^{-6} kgm^2			
Natural frequency of the stator coupling	≥ 1800 Hz			
Permissible axis motion of measured shaft	± 0.5 mm			
Vibration 55 to 2000 Hz **Shock** 6 ms	≤ 300 m/s^2 (EN 60068-2-6) ≤ 2000 m/s^2 (EN 60068-2-27)			
Max. operating temp.	100 °C			
Min. operating temp.	*Fixed cable:* –40 °C *Moving cable:* –10 °C			
Protection EN 60529	IP 64 when mounted			
Weight	Approx. 0.25 kg			

***** Please select when ordering

[1] Restricted tolerances

Signal amplitude:	0.8 to 1.2 V_{PP}
Asymmetry:	0.05
Amplitude ratio:	0.9 to 1.1
Phase angle:	90° ± 5° elec.

[2] Velocity-dependent deviations between the absolute and incremental signals

Functional Safety for ECN 425 and EQN 437 upon request. For dimensions and specifications see the Product Information document.

ERN 1300 series

Incremental rotary encoders
- **Stator coupling 06 for axis mounting**
- **Taper shaft 65B**



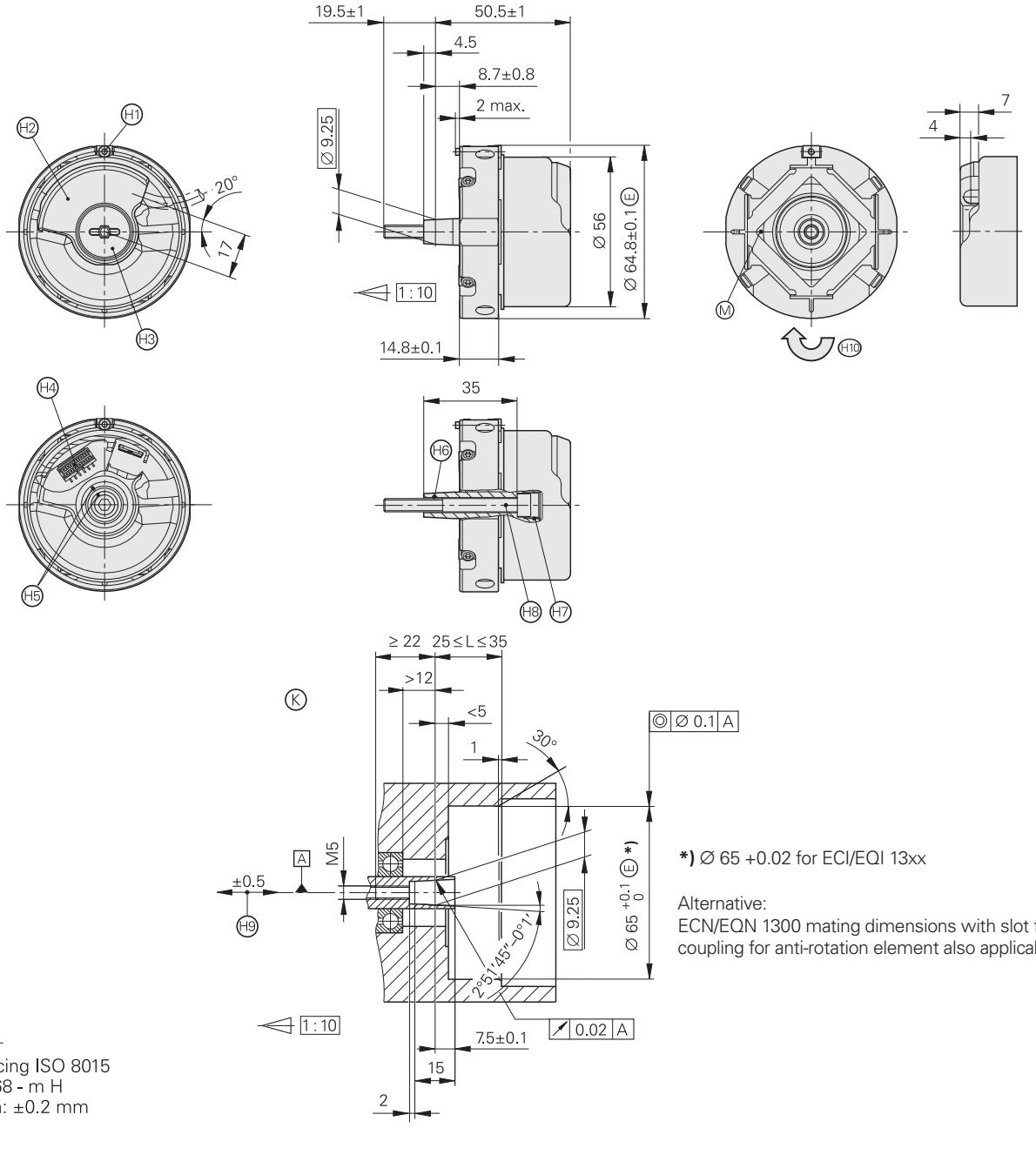

***)** Ø 65 +0.02 for ECI/EQI 13xx

Alternative:
ECN/EQN 1300 mating dimensions with slot for stator coupling for anti-rotation element also applicable.

mm
Tolerancing ISO 8015
ISO 2768 - m H
< 6 mm: ±0.2 mm

Ⓐ = Bearing of mating shaft
Ⓚ = Required mating dimensions
Ⓜ = Measuring point for operating temperature
Ⓗ1 = Clamping screw for coupling ring, width A/F 2. Tightening torque: 1.25–0.2 Nm
Ⓗ2 = Die-cast cover
Ⓗ3 = Screw plug, width A/F 3 and 4. Tightening torque: 5+0.5 Nm
Ⓗ4 = PCB connector
Ⓗ5 = Reference mark position indicated on shaft and cap
Ⓗ6 = M10 back-off thread
Ⓗ7 = M10 back-off thread
Ⓗ8 = Self-tightening screw, M5 x 50, DIN 6912, width A/F 4. Tightening torque: 5+0.5 Nm
Ⓗ9 = Compensation of mounting tolerances and thermal expansion, no dynamic motion permitted
Ⓗ10 = Direction of shaft rotation for output signals as per the interface description

	Incremental				
	ERN 1321	**ERN 1381**	**ERN 1387**	**ERN 1326**	
Interface	⊓⊔TTL	∿ 1 V_{PP} [1]		⊓⊔TTL	
Line count*/system accuracy	1024/± 64" 2048/± 32" 4096/± 16"	512/± 60" 2048/± 20" 4096/± 16"	2048/± 20"	1024/± 64" 2048/± 32" 4096/± 16"	8192/± 16" [5]
Reference mark	One				
Scanning frequency Edge separation a Cutoff frequency –3 dB	≤ 300 kHz ≥ 0.35 µs –	– ≥ 210 kHz		≤ 300 kHz ≥ 0.35 µs –	≤ 150 kHz ≥ 0.22 µs
Commutation signals	–		∿ 1 V_{PP} [1]	⊓⊔TTL	
Width*	–		Z1 track [2]	3 x 120°; 4 x 90° [3]	
Electrical connection	Via 12-pin PCB connector		Via PCB connector, 14-pin	Via PCB connector, 16-pin	
Voltage supply	5 V DC ± 0.5 V		5 V DC ± 0.25 V	5 V DC ± 0.5 V	
Current consumption (without load)	≤ 120 mA		≤ 130 mA	≤ 150 mA	
Shaft	Taper shaft Ø 9.25 mm; taper 1:10				
Mech. permiss. speed n	≤ 15000 min^{-1}				
Starting torque	≤ 0.01 Nm (at 20 °C)				
Moment of inertia of rotor	2.6 · 10^{-6} kgm^2				
Natural frequency of the stator coupling	≥ 1800 Hz				
Permissible axis motion of measured shaft	± 0.5 mm				
Vibration 55 to 2000 Hz **Shock** 6 ms	≤ 300 m/s^2 [4] (EN 60068-2-6) ≤ 2000 m/s^2 (EN 60068-2-27)				
Max. operating temp.	120 °C	120 °C *4096 lines:* 80 °C	120 °C		
Min. operating temp.	–40 °C				
Protection EN 60529	IP 40 when mounted				
Weight	Approx. 0.25 kg				

* Please select when ordering

[1] Restricted tolerances
- Signal amplitude: 0.8 to 1.2 V_{PP}
- Asymmetry: 0.05
- Amplitude ratio: 0.9 to 1.1
- Phase angle: 90° ± 5° elec.
- Signal-to-noise ratio E, F: 100 mV

[2] One sine and one cosine signal per revolution; see *Interfaces* catalog

[3] Three square-wave signals with signal periods of 90° or 120° mechanical phase shift; see *Interfaces* catalog

[4] As per standard for room temperature, for operating temperature
Up to 100 °C: ≤ 300 m/s^2
Up to 120 °C: ≤ 150 m/s^2

[5] Through integrated signal doubling

EQN/ERN 400 series

Absolute and incremental rotary encoders
- **Torque support**
- **Blind hollow shaft**
- **Replacement for Siemens 1XP8000**



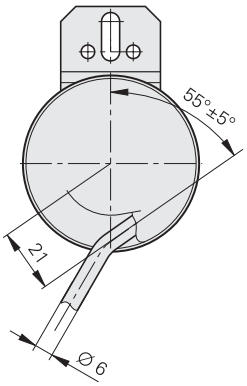

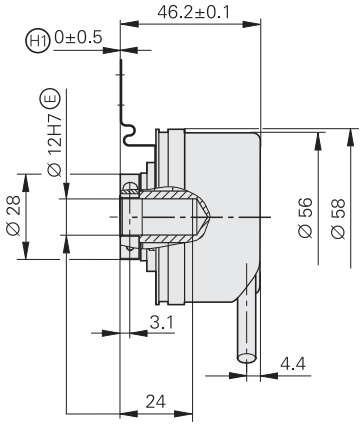

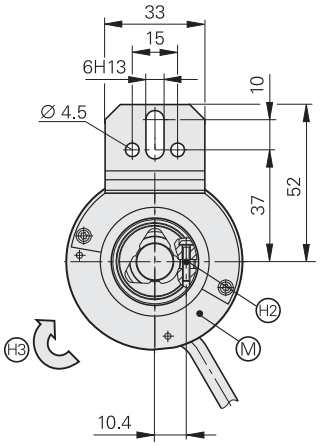

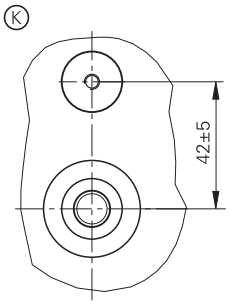

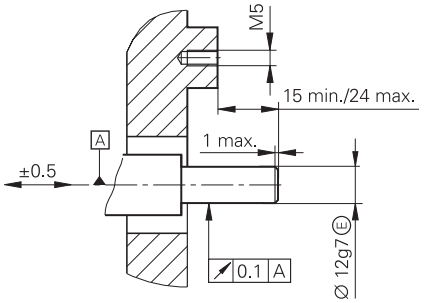

mm

Tolerancing ISO 8015
ISO 2768 - m H
< 6 mm: ±0.2 mm

Siemens model	Replacement model		ID	Description
1XP8012-10	ERN 430[1)]	HTL	597331-76	Cable 0.8 m with mounted coupling and M23 central fastening, 17-pin
1XP8032-10	ERN 430	HTL		
1XP8012-20	ERN 420[1)]	TTL	597330-74	
1XP8032-20	ERN 420	TTL		
1XP8014-10	EQN 425[1)]	EnDat	649989-74	Cable 1 m with M23 coupling, 17-pin
1XP8024-10	EQN 425	EnDat		
1XP8014-20	EQN 425[1)]	SSI	649990-73	
1XP8024-20	EQN 425	SSI		

[1)] Original Siemens encoder features M23 flange socket, 17-pin

A = Bearing of mating shaft
K = Required mating dimensions
M = Measuring point for operating temperature
H1 = Distance from clamping ring to coupling
H2 = Clamping screw with hexalobular socket X8, tightening torque: 1.1±0.1 Nm
H3 = Direction of shaft rotation for output signals as per the interface description

	Absolute		Incremental	
	EQN 425		**ERN 420**	**ERN 430**
Interface*	EnDat 2.1	SSI	⊓⊔ TTL	⊓⊔ HTL
Ordering designation	EnDat01	SSI41r1	–	–
Positions per revolution	8192 (13 bits)		–	–
Revolutions	4096		–	–
Code	Pure binary	Gray	–	–
Elec. permissible speed Deviations[1]	≤ 1500/10000 min^{-1} ± 1 LSB/± 50 LSB	≤ 12000 min^{-1} ± 12 LSB	–	–
Calculation time t_{cal} Clock frequency	≤ 9 µs ≤ 2 MHz	≤ 5 µs –	–	–
Incremental signals	∿ 1 V_{PP}[2]		⊓⊔ TTL	⊓⊔ HTL
Line counts	2048	512	1024	
Cutoff frequency –3 dB Scanning frequency Edge separation a	≥ 400 kHz – –	≥ 130 kHz – –	– ≤ 300 kHz ≥ 0.39 µs	
System accuracy	± 20"	± 60"	1/20 of grating period	
Electrical connection	Cable 1 m, without coupling		Cable 0.8 m with mounted coupling and central fastening	
Voltage supply	3.6 V to 14 V DC	10 V to 30 V DC	5 V DC ± 0.5 V	10 V to 30 V DC
Power consumption (maximum)	*3.6 V:* ≤ 700 mW *14 V:* ≤ 800 mW	*10 V:* ≤ 750 mW *30 V:* ≤ 1100 mW	–	–
Current consumption (typical; without load)	*5 V:* 105 mA	*5 V:* 120 mA *24 V:* 28 mA	≤ 120 mA	≤ 150 mA
Shaft	Blind hollow shaft, D = 12 mm			
Mech. permiss. speed n	≤ 6000 min^{-1}			
Starting torque	≤ 0.01 Nm at 20 °C			
Moment of inertia of rotor	≤ $4.3 \cdot 10^{-6}$ kgm^2			
Permissible axial motion of measured shaft	± 1 mm			
Vibration 55 to 2000 Hz **Shock** 6 ms	≤ 300 m/s^2 (EN 60068-2-6) ≤ 1000 m/s^2 (EN 60068-2-27)			
Max. operating temp.	100 °C			
Min. operating temp.	*Fixed cable:* –40 °C *Moving cable:* –10 °C			
Protection EN 60529	IP 66			
Weight	Approx. 0.3 kg			

***** Please select when ordering
[1] Speed-dependent deviations between the absolute value and incremental signal
[2] Restricted tolerances: Signal amplitudes 0.8 to 1.2 V_{PP}

ERN 401 series

Incremental rotary encoders
- **Stator coupling via fastening clips**
- **Blind hollow shaft**
- **Replacement for Siemens 1XP8000**



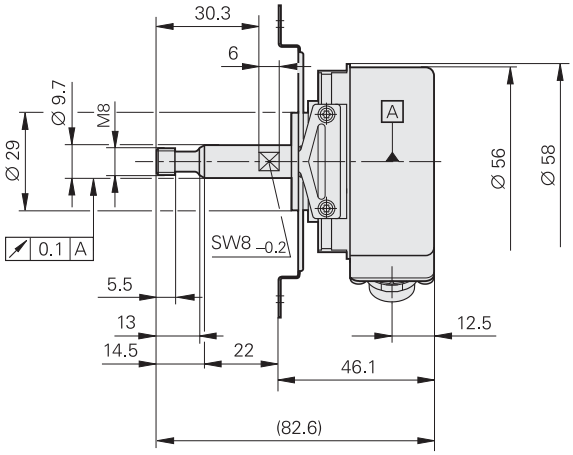

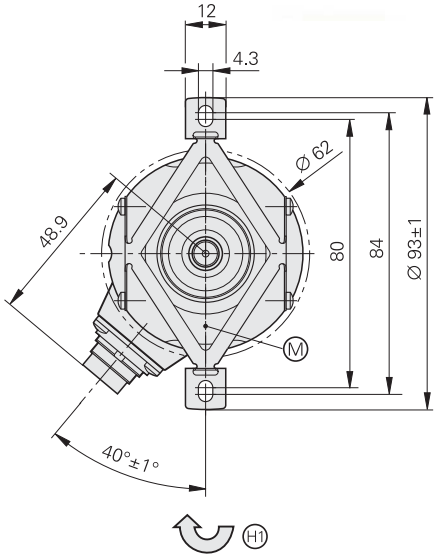

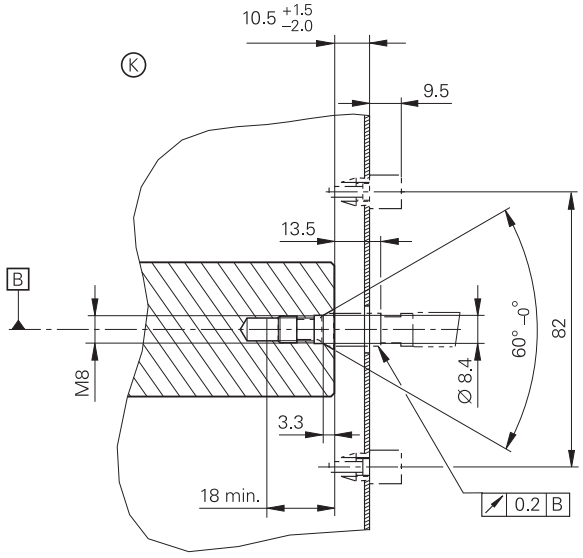

mm

Tolerancing ISO 8015
ISO 2768 - m H
< 6 mm: ±0.2 mm

Siemens model	Replacement model	ID
1XP8001-2	ERN 421	538724-71
1XP8001-1	ERN 431	538725-02

Ⓐ = Bearing of mating shaft
Ⓑ = Bearing of encoder
Ⓚ = Required mating dimensions
Ⓜ = Measuring point for operating temperature
Ⓗ1 = Direction of shaft rotation for output signals as per the interface description

	Incremental	
	ERN 421	**ERN 431**
Interface	⊓⊔TTL	⊓⊔ HTL
Line counts	1 024	
Reference mark	One	
Scanning frequency Edge separation a	≤ 300 kHz ≥ 0.39 µs	
System accuracy	1/20 of grating period	
Electrical connection	Binder **flange socket,** radial	
Voltage supply	5 V DC ± 0.5 V	10 V to 30 V DC
Current consumption without load	≤ 120 mA	≤ 150 mA
Shaft	Solid shaft with M8 external thread, 60° centering taper	
Mech. permiss. speed n [1)]	≤ 6000 min^{-1}	
Starting torque At 20 °C Below –20 °C	≤ 0.01 Nm ≤ 1 Nm	
Moment of inertia of rotor	≤ $4.3 \cdot 10^{-6}$ kgm^2	
Permissible axial motion of measured shaft	± 1 mm	
Vibration 55 to 2000 Hz **Shock** 6 ms	≤ 100 m/s^2 (EN 60068-2-6); higher values on request ≤ 1000 m/s^2 (EN 60068-2-27)	
Max. operating temp.	100 °C	
Min. operating temp.	–40 °C	
Protection EN 60529	IP 66	
Weight	Approx. 0.3 kg	

[1)] For the correlation between the operating temperature and the shaft speed or supply voltage, see *General mechanical information*

ECI/EQI 1100 series



Absolute rotary encoders
- **Flange for axis mounting**
- **Blind hollow shaft**
- **Without integral bearing**

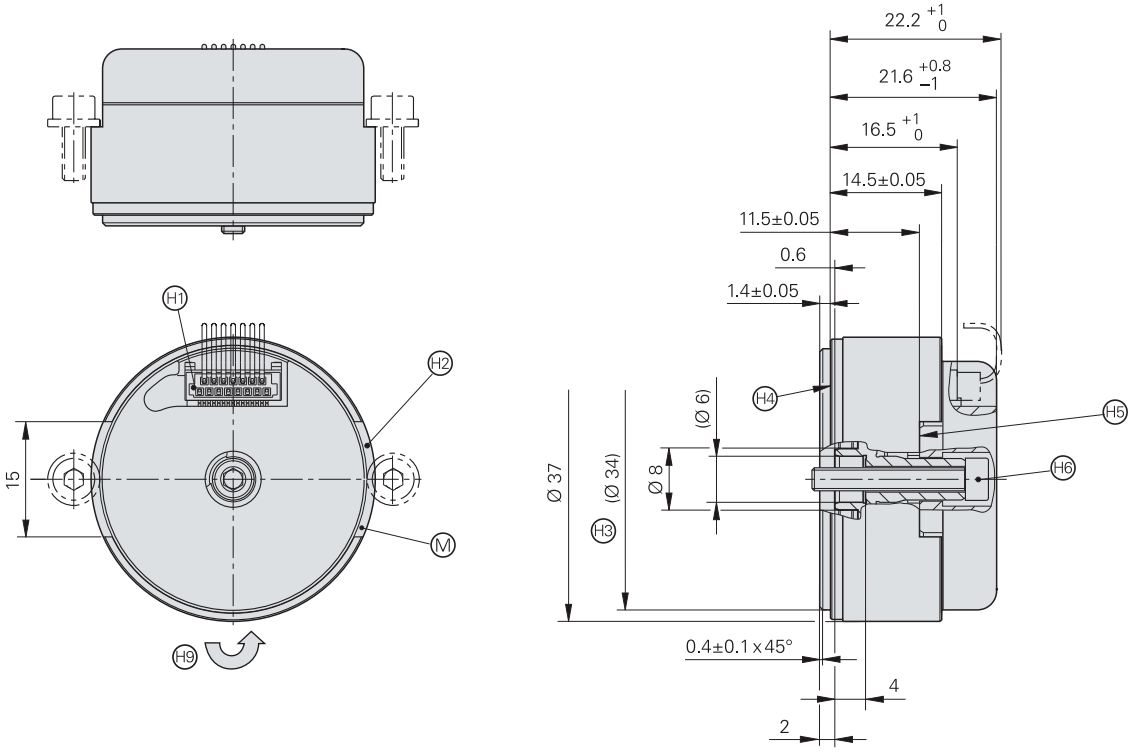

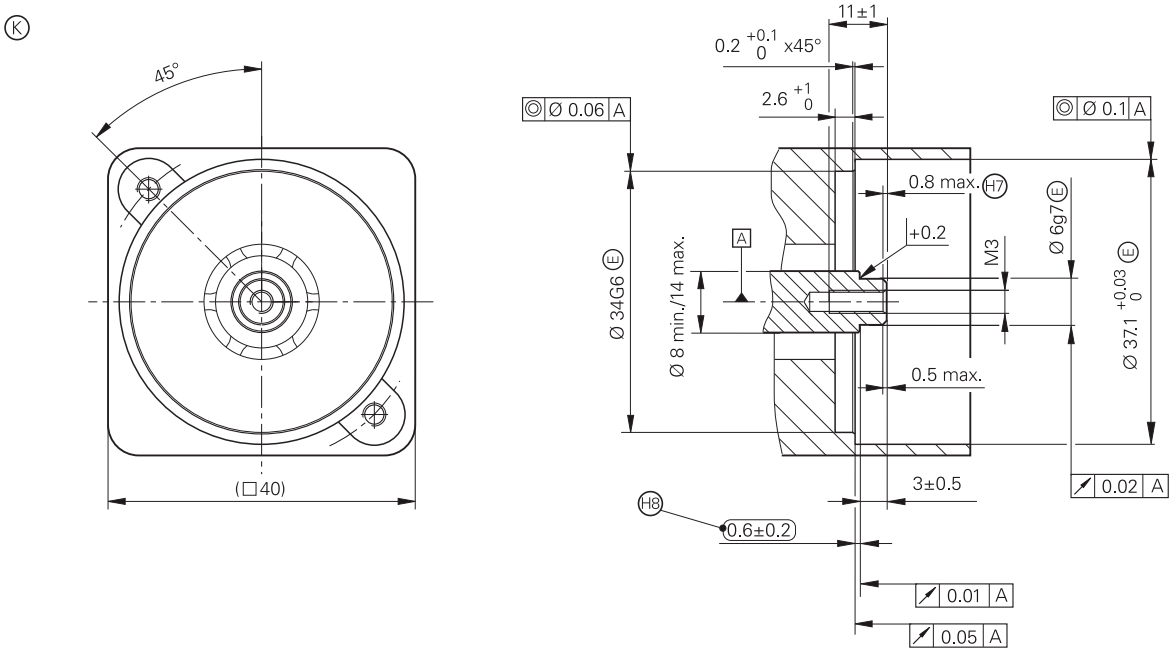

mm

Tolerancing ISO 8015
ISO 2768 - m H
< 6 mm: ±0.2 mm

A = Bearing of mating shaft
K = Required mating dimensions
M = Measuring point for operating temperature
H1 = PCB connector, 15-pin
H2 = Permissible surface pressure (material: aluminum 230 N/mm^2)
H3 = Centering collar
H4 = Bearing surface
H5 = Clamping surfaces
H6 = Self-locking screw M3 x 20, ISO 4762, width A/F 2.5, tightening torque: 1.2 ±0.1 Nm
H7 = Start of thread
H8 = Maximum permissible deviation between shaft and flange surfaces.
Compensation of mounting tolerances and thermal expansion, no dynamic motion permitted
H9 = Direction of shaft rotation for output signals as per the interface description

	Absolute			
	ECI 1118		**EQI 1130**	
Interface	EnDat 2.1			
Ordering designation*	EnDat01	EnDat21	EnDat01	EnDat21
Position values/revolution	262 144 (18 bits)			
Revolutions	–		4096 (12 bits)	
Elec. permissible speed/ deviations[1)]	4000 min^{-1}/± 400 LSB 15000 min^{-1}/± 800 LSB	15000 min^{-1} (for continuous position value)	4000 min^{-1}/± 400 LSB 12000 min^{-1}/± 800 LSB	12000 min^{-1} (for continuous position value)
Calculation time t_{cal} Clock frequency	≤ 8 µs ≤ 2 MHz			
Incremental signals	~ 1 V_{PP}	Without	~ 1 V_{PP}	Without
Line count	16	–	16	–
Cutoff frequency –3 dB	≥ 6 kHz typical	–	≥ 6 kHz typical	–
System accuracy	± 280"			
Electrical connection	Via PCB connector, 15-pin			
Voltage supply	5 V DC ± 0.25 V			
Power consumption (max.)	≤ 0.85 W		≤ 1.00 W	
Current consumption (typical)	120 mA (without load)		145 mA (without load)	
Shaft	Blind hollow shaft Ø 6 mm, axial clamping			
Mech. permiss. speed n	≤ 15000 min^{-1}		≤ 12000 min^{-1}	
Moment of inertia of rotor	$0.8 \cdot 10^{-6}$ kgm^2			
Permissible axial motion of measured shaft	± 0.2 mm			
Vibration 55 to 2000 Hz **Shock** 6 ms	≤ 300 m/s^2 (EN 60068-2-6) ≤ 1000 m/s^2 (EN 60068-2-27)			
Max. operating temp.	115 °C			
Min. operating temp.	–20 °C			
Protection EN 60529	IP 20 when mounted			
Weight	Approx. 0.06 kg			

***** Please select when ordering
[1)] Velocity-dependent deviations between the absolute and incremental signals

ECI 1118



Absolute rotary encoders
- **Flange for axis mounting**
- **Blind hollow shaft**
- **Without integral bearing**

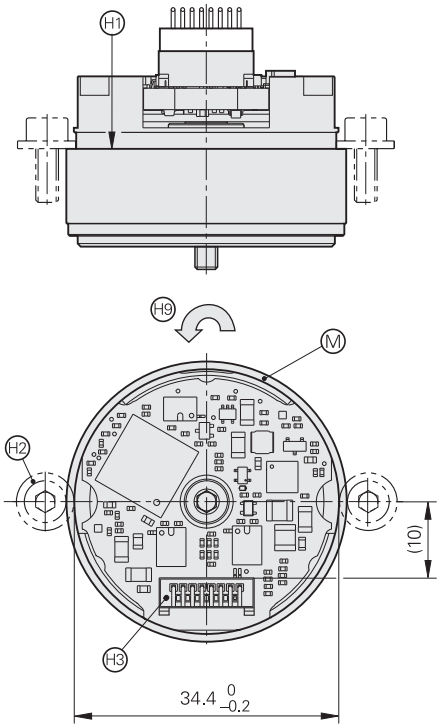

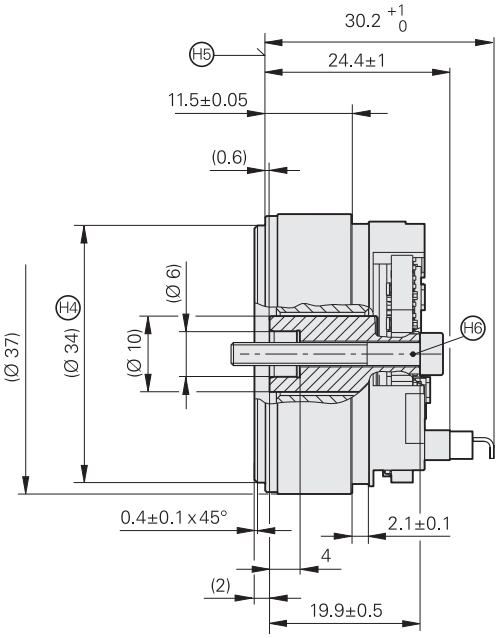

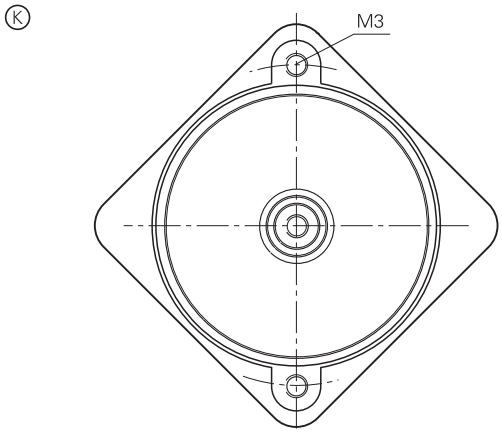

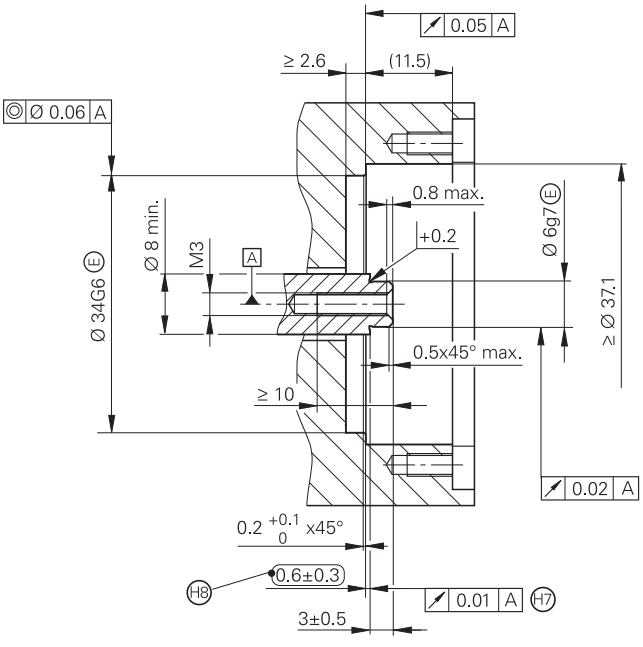

mm

Tolerancing ISO 8015
ISO 2768 - m H
< 6 mm: ±0.2 mm

A = Bearing of mating shaft
K = Required mating dimensions
M = Measuring point for operating temperature
H1 = Clamping surface
H2 = Proposed attachment: washer and self-locking screw M3, ISO 4762, width A/F 2.5. Tightening torque: 1.2±0.1 Nm
H3 = PCB connector, 15-pin
H4 = Centering collar
H5 = Bearing surface of stator
H6 = Self-locking screw M3 x 25, ISO 4762, width A/F 2.5, tightening torque: 1.2 ±0.1 Nm
H7 = Shaft surface
H8 = Maximum permissible distance between shaft and bearing surface of stator during mounting and operation
H9 = Direction of shaft rotation for output signals as per the interface description

	Absolute **ECI 1118**
Interface	EnDat 2.2
Ordering designation	EnDat22
Position values/revolution	262 144 (18 bits)
Revolutions	–
Elec. permissible speed/ deviations[1)]	15 000 min^{-1} for continuous position value
Calculation time t_{cal} Clock frequency	≤ 6 µs ≤ 8 MHz
System accuracy	± 120"
Electrical connection	Via PCB connector, 15-pin
Voltage supply	3.6 V to 14 V DC
Power consumption (max.)	*3.6 V:* ≤ 520 mW *14 V:* ≤ 600 mW
Current consumption (typical)	*5 V:* 80 mA (without load)
Shaft	Blind hollow shaft Ø 6 mm, axial clamping
Mech. permiss. speed n	≤ 15 000 min^{-1}
Moment of inertia of rotor	$0.3 \cdot 10^{-6}$ kgm^2
Permissible axial motion of measured shaft	± 0.3 mm
Vibration 55 to 2 000 Hz **Shock** 6 ms	≤ 300 m/s^2 (EN 60 068-2-6) ≤ 1 000 m/s^2 (EN 60 068-2-27)
Max. operating temp.	115 °C
Min. operating temp.	–20 °C
Protection EN 60 529	IP 00[2)]
Weight	Approx. 0.05 kg

[1)] Velocity-dependent deviations between the absolute and incremental signals
[2)] CE compliance of the complete system must be ensured by taking the correct measures during installation.

EBI 1135



Absolute rotary encoders
- **Flange for axis mounting**
- **Blind hollow shaft**
- **Without integral bearing**
- **Multiturn function via battery-buffered revolution counter**

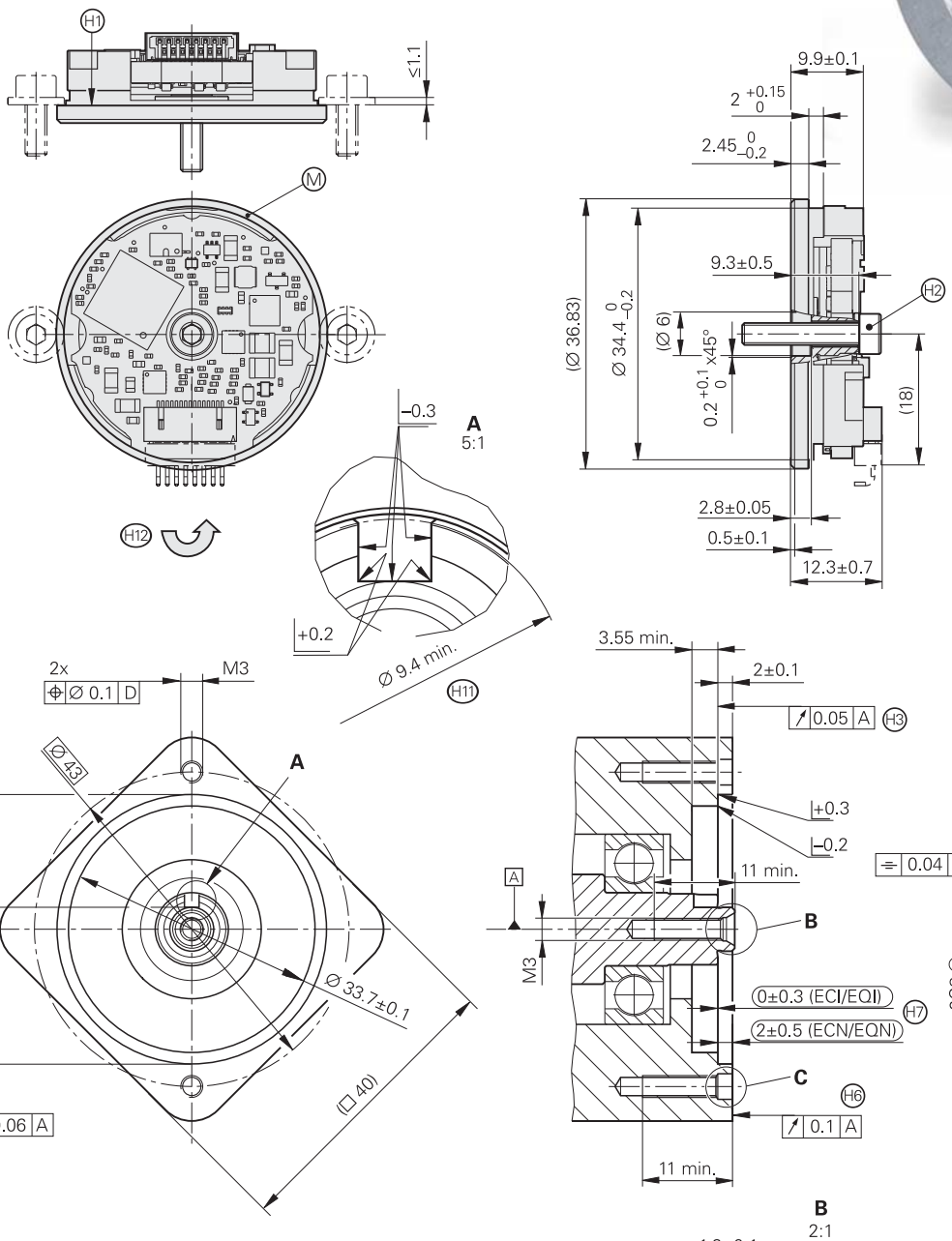

mm

Tolerancing ISO 8015
ISO 2768 - m H
< 6 mm: ±0.2 mm

A = Bearing of mating shaft
K = Required mating dimensions
M = Measuring point for operating temperature
H1 = Clamping surface
H2 = Screw ISO 4762 – M3x16, tightening torque 1.15±0.05 Nm
H3 = Flange surface ECI/EQI; ensure full-surface contact!
H4 = Shaft; ensure full-surface contact!
H5 = Slot required for ECN/EQN
H6 = Coupling surface
H7 = Maximum permissible distance between shaft and coupling surface (ECN/EQN) or flange surface (ECI/EQI)
Compensation of mounting tolerances and thermal expansion
H8 = Chamfer is obligatory at start of thread for materially bonding anti-rotation lock
H9 = Possible centering hole
H10 = Undercut
H11 = Contact surface of slot
H12 = Direction of shaft rotation for output signals as per the interface description

	Absolute **EBI 1135**
Interface	EnDat 2.2
Ordering designation	EnDat22[1]
Position values/revolution	262 144 (18 bits; 19-bit data word length with LSB = 0)
Revolutions	65 536 (16 bits)
Elec. permissible speed	≤ 12 000 min^{-1} for continuous position value
Calculation time t_{cal} Clock frequency	≤ 6 µs ≤ 8 MHz
System accuracy	± 120"
Electrical connection	Via PCB connector, 15-pin
Voltage supply	*Rotary encoders U_P:* 3.6 V to 14 V DC *Buffer battery U_{BAT}:* 3.6 V to 5.25 V DC
Power consumption (max.)	*Normal operation with 3.6 V:* 520 mW *Normal operation with 14 V:* 600 mW
Current consumption (typical)	*Normal operation with 5 V:* 80 mA (without load) *Buffer battery[2]:* 22 µA (with rotating shaft) 12 µA (at standstill)
Shaft	Blind hollow shaft Ø 6 mm, axial clamping
Mech. permiss. speed n	≤ 12 000 min^{-1}
Mech. permissible acceleration	≤ 10^5 rad/s^2
Moment of inertia of rotor	0.2 · 10^{-6} kgm^2
Permissible axial motion of measured shaft	± 0.3 mm
Vibration 55 to 2 000 Hz **Shock** 6 ms	≤ 300 m/s^2 (EN 60 068-2-6) ≤ 1 000 m/s^2 (EN 60 068-2-27)
Max. operating temp.	115 °C
Min. operating temp.	–20 °C
Protection EN 60 529	IP 00 [3]
Weight	Approx. 0.02 kg

[1] External temperature sensor and online diagnostics are not supported. Compliance with the EnDat specification 297 403 and the EnDat Application Notes 722 024, Chapter 11, *Battery-buffered encoders* is required for correct control of the encoder.
[2] At T = 25 °C; U_{BAT} = 3.6 V
[3] CE compliance of the complete system must be ensured by taking the correct measures during installation.

ECI/EQI 1300 series

Absolute rotary encoders
- **Flange for axis mounting; adjusting tool required**
- **Taper shaft or blind hollow shaft**
- **Without integral bearing**



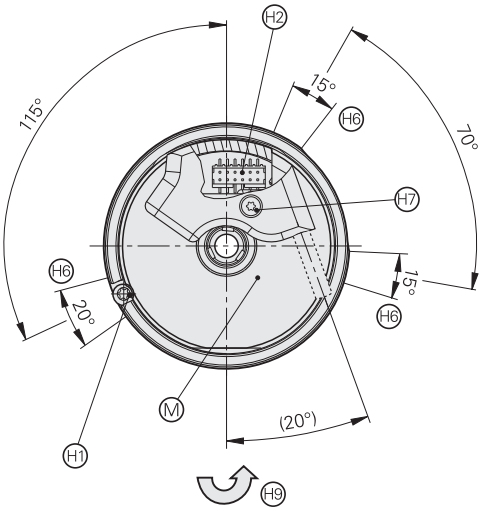

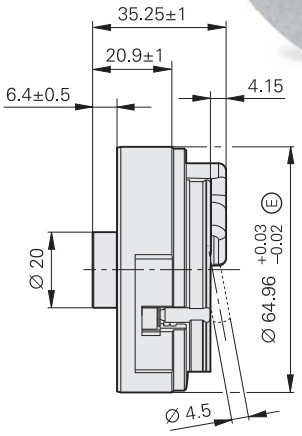

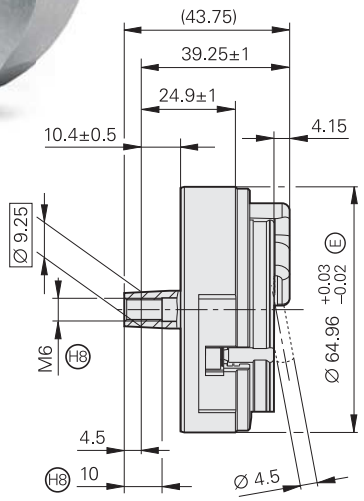

All dimensions under operating conditions

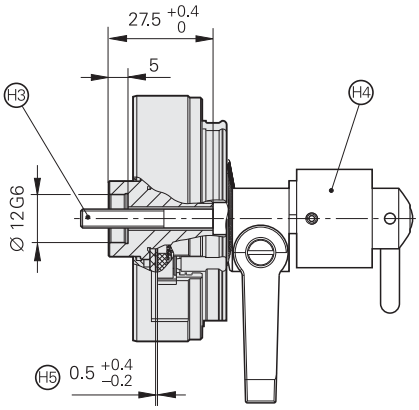

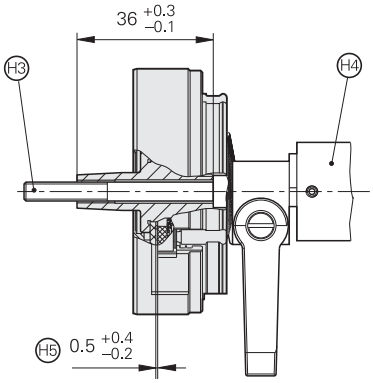

mm
Tolerancing ISO 8015
ISO 2768 - m H
< 6 mm: ±0.2 mm

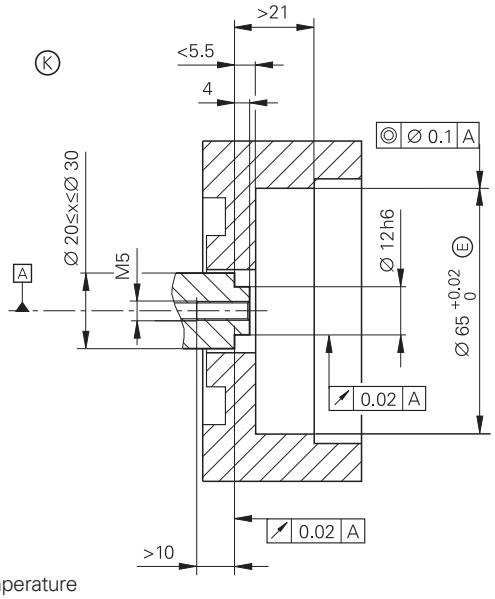

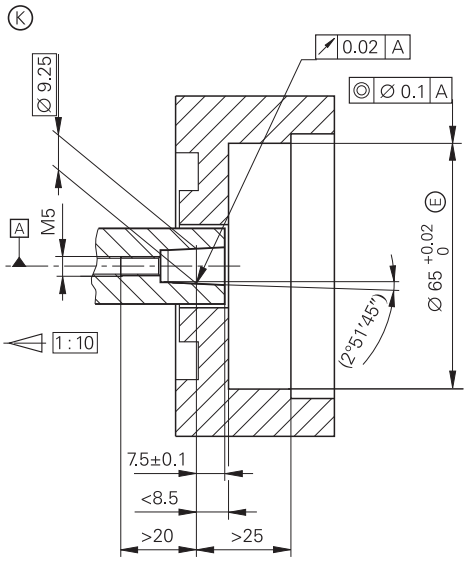

A = Bearing
K = Required mating dimensions
M = Measuring point for operating temperature
H1 = Eccentric bolt. For mounting: Turn back and tighten with 2–0.5 Nm torque (Torx 15)
H2 = 12-pin PCB connector
H3 = Cylinder head screw: ISO 4762 – M5x35–8.8, tightening torque 5+0.5 Nm for hollow shaft
Cylinder head screw: ISO 4762 – M5x50–8.8, tightening torque 5+0.5 Nm for taper shaft
H4 = Setting tool for scanning gap
H5 = Permissible scanning gap range over all conditions
H6 = Minimum clamping and support surface; a closed diameter is best
H7 = Mounting screw for cable cover M2.5 Torx 8, tightening torque 0.4±0.1 Nm
H8 = M6 back-off thread
H9 = Direction of shaft rotation for output signals as per the interface description

	Absolute	
	ECI 1319	**EQI 1331**
Interface	EnDat 2.2	
Ordering designation	EnDat01	
Position values/revolution	524288 (19 bits)	
Revolutions	–	4096 (12 bits)
Elec. permissible speed/ deviations[1)]	≤ 3750 min^{-1}/± 128 LSB ≤ 15000 min^{-1}/± 512 LSB	≤ 4000 min^{-1}/± 128 LSB ≤ 12000 min^{-1}/± 512 LSB
Calculation time t_{cal} Clock frequency	≤ 8 µs ≤ 2 MHz	
Incremental signals	⌒ 1 V_{PP}	
Line count	32	
Cutoff frequency –3 dB	≥ 6 kHz typical	
System accuracy	± 180“	
Electrical connection	Via 12-pin PCB connector	
Voltage supply	4.75 V to 10 V DC	
Power consumption (max.)	*4.75 V:* ≤ 615 mW *10 V:* ≤ 630 mW	*4.75 V:* ≤ 725 mW *10 V:* ≤ 740 mW
Current consumption (typical)	*5 V:* 85 mA (without load)	*5 V:* 102 mA (without load)
Shaft*	Taper shaft Ø 9.25 mm; Taper 1:10 Blind hollow shaft for axial clamping Ø 12.0 mm; Length 5 mm	
Moment of inertia of rotor	*Tapered shaft:* 2.1 x 10^{-6} kgm^2 *Hollow shaft:* 2.8 x 10^{-6} kgm^2	
Mech. permiss. speed n	≤ 15000 min^{-1}	≤ 12000 min^{-1}
Permissible axial motion of measured shaft	–0.2/+0.4 mm with 0.5 mm scanning gap	
Vibration 55 to 2000 Hz **Shock** 6 ms	≤ 200 m/s^2 (EN 60068-2-6) ≤ 2000 m/s^2 (EN 60068-2-27)	
Max. operating temp.	115 °C	
Min. operating temp.	–20 °C	
Protection EN 60529	IP 20 when mounted	
Weight	Approx. 0.13 kg	

***** Please select when ordering
[1)] Velocity-dependent deviations between the absolute and incremental signals

ECI/EQI 1300 series



Absolute rotary encoders
- **Mounting-compatible to photoelectric rotary encoders with 07B stator coupling**
- **0YA flange for axis mounting**
- **Blind hollow shaft Ø 12.7 mm 44C**
- **Without integral bearing**
- **Cost-optimized mating dimensions upon request**

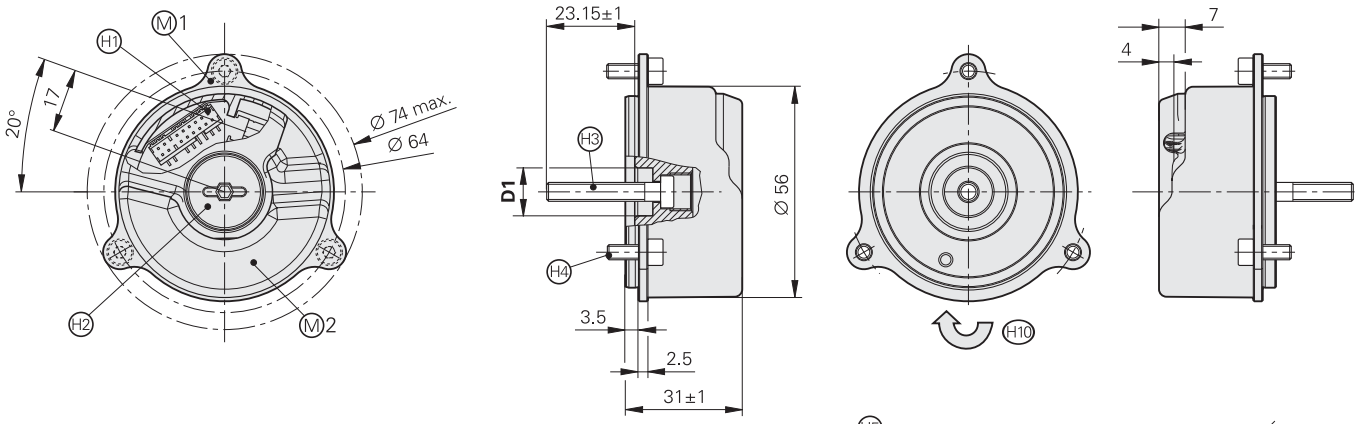

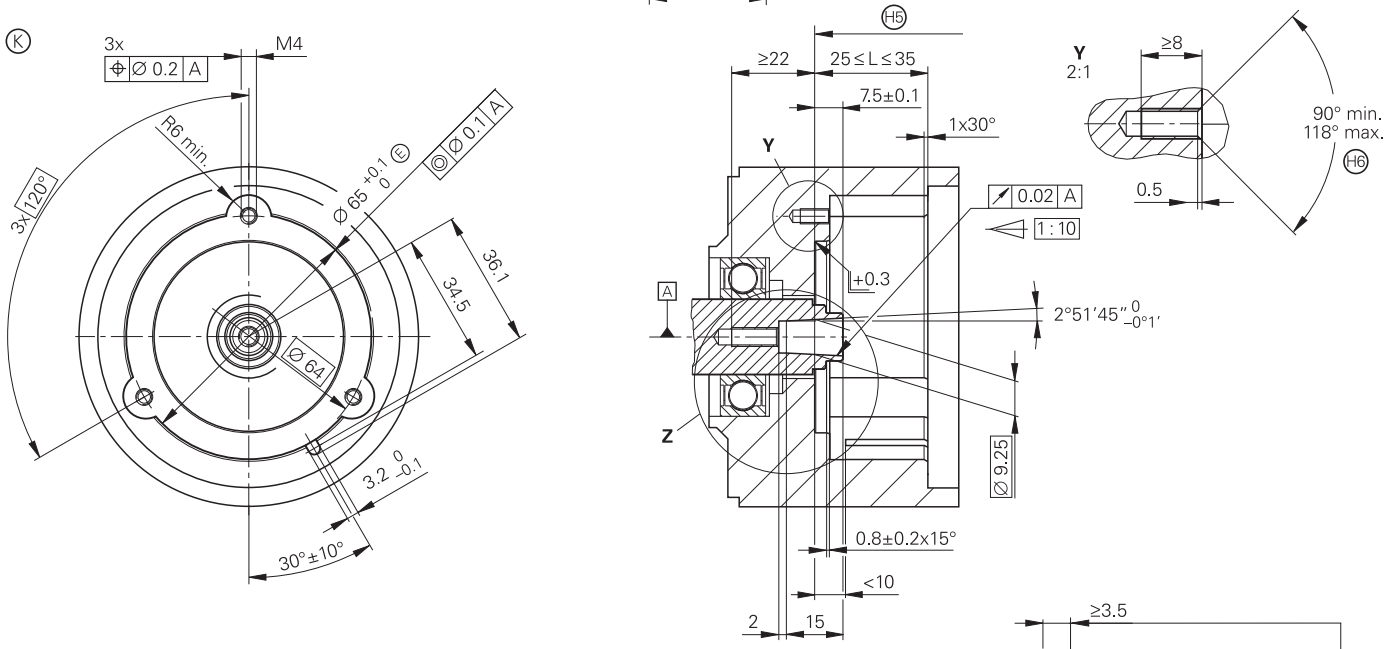

D1	D2
Ø 12.7G6 E	Ø 12.7h6 E

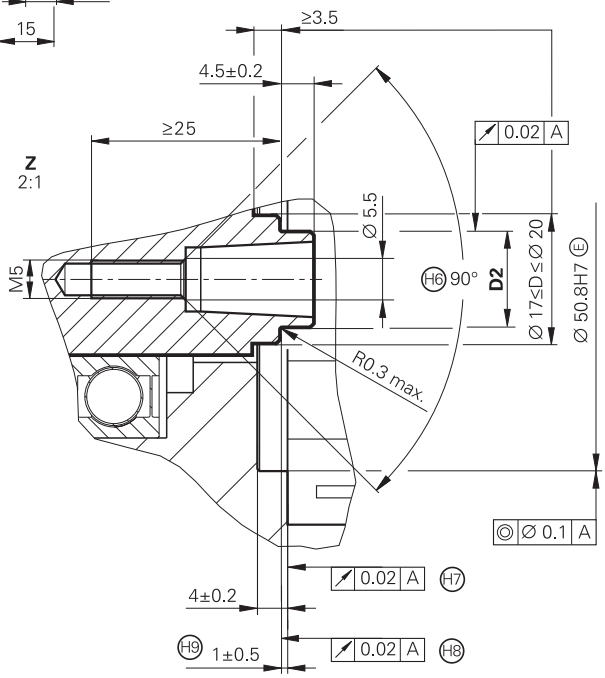

mm

Tolerancing ISO 8015
ISO 2768 - m H
< 6 mm: ±0.2 mm

A = Bearing
M1 = Measuring point for operating temperature
M2 = Measuring point for vibration
K = Required mating dimensions
H1 = PCB connector, 12-pin and 4-pin
H2 = Screw plug width A/F 3 and 4, tightening torque 5 +0.5 Nm
H3 = Screw DIN 6912 – M5x30 – 8.8 – SW4 tightening torque 5+0.5 Nm
H4 = Screw ISO 4762 – M4x10 – 8.8 – SW3 tightening torque 2±0.1 Nm
H5 = Functional diameter of taper for ECN/EQN 13xx
H6 = Chamfer is obligatory at start of thread for materially bonding anti-rotation lock
H7 = Flange surface ExI/resolver; ensure full-surface contact!
H8 = Shaft; ensure full-surface contact!
H9 = Maximum permissible deviation between shaft and flange surfaces. Compensation of mounting tolerances and thermal expansion. ECI/EQI: Dynamic motion permitted over entire range. If the tolerance range differs, please consult HEIDENHAIN
H10 = Direction of shaft rotation for output signals as per the interface description

	Absolute **ECI 1319**	**EQI 1331**
Interface	EnDat 2.2	
Ordering designation	EnDat22	
Position values/revolution	524288 (19 bits)	
Revolutions	–	4096 (12 bits)
Elec. permissible speed/ deviations[1]	≤ 15000 min^{-1} (for continuous position value)	
Calculation time t_{cal} Clock frequency	≤ 5 µs ≤ 16 MHz	
System accuracy	± 65″	
Electrical connection via PCB connector	*Rotary encoder:* 12-pin *Thermistor*[1]*:* 4-pin	
Cable length	≤ 100 m	
Voltage supply	3.6 V to 14 V DC	
Power consumption (maximum)	*At 3.6 V:* ≤ 650 mW *At 14 V:* ≤ 700 mW	*At 3.6 V:* ≤ 750 mW *At 14 V:* ≤ 850 mW
Current consumption (typical)	*At 5 V:* 95 mA (without load)	*At 5 V:* 115 mA (without load)
Shaft*	Blind hollow shaft for axial clamping Ø 12.7 mm	
Mech. permiss. speed n	≤ 15000 min^{-1}	≤ 12000 min^{-1}
Moment of inertia of rotor	2.6 x 10^{-6} kgm^2	
Permissible axial motion of measured shaft	± 0.5 mm	
Vibration 55 to 2000 Hz[2] **Shock** 6 ms	*Stator:* ≤ 400 m/s^2; *rotor:* ≤ 600 m/s^2 (EN 60068-2-6) ≤ 2000 m/s^2 (EN 60068-2-27)	
Max. operating temp.	115 °C	
Min. operating temp.	–40 °C	
Protection EN 60529	IP 20 when mounted	
Weight	Approx. 0.13 kg	

[1] Evaluation optimized for KTY 84-130
[2] 10 Hz to 55 Hz, constant over distance, 4.9 mm peak to peak
Functional safety available. For dimensions and specifications, see the Product Information document.

ECI/EBI 100 series



Absolute rotary encoders
- **Flange for axis mounting**
- **Hollow through shaft**
- **Without integral bearing**
- **EBI 135: Multiturn function via battery-buffered revolution counter**

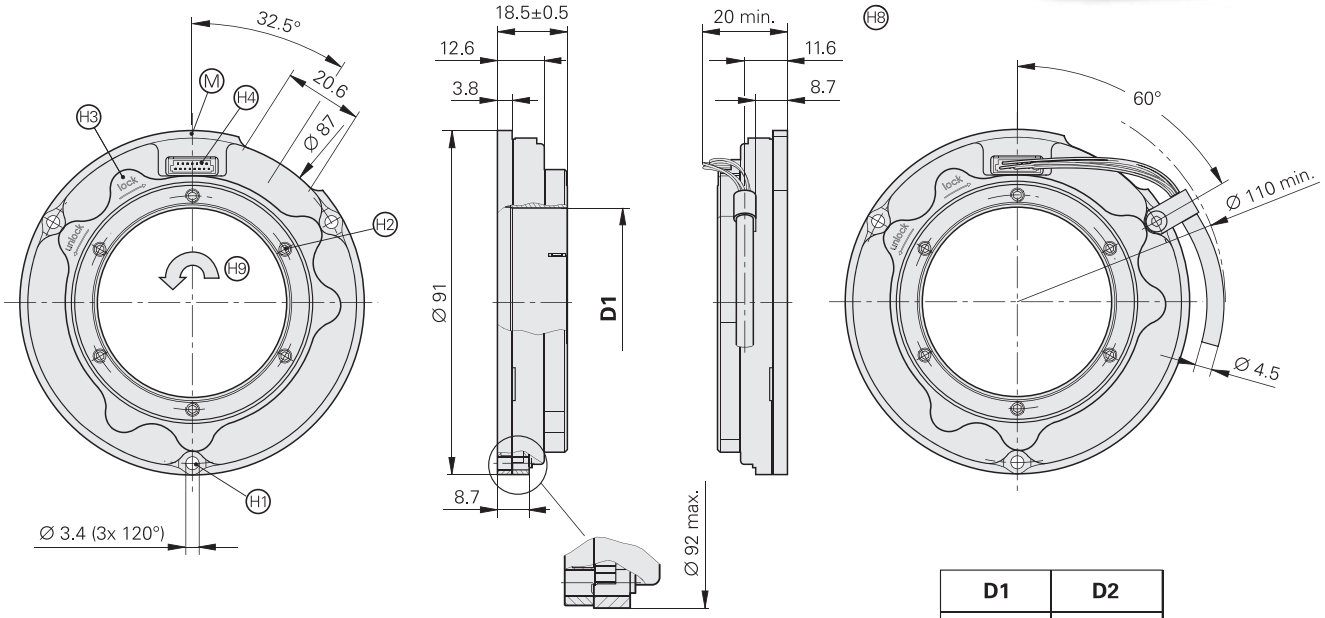

D1	D2
∅ 30G6	∅ 30h7
∅ 38G6	∅ 38h7
∅ 50G6	∅ 50h7

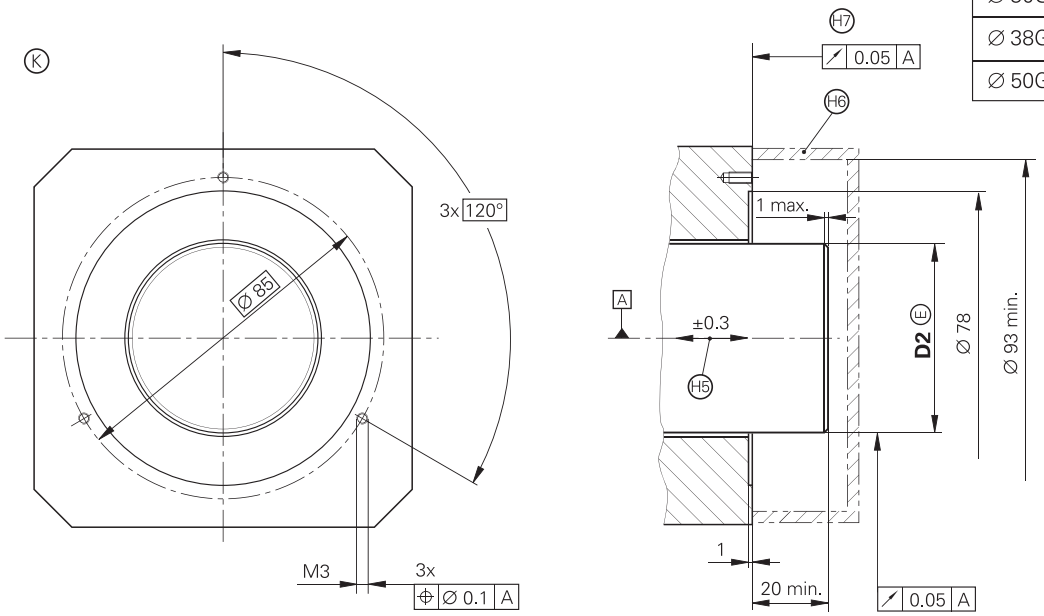

mm

Tolerancing ISO 8015
ISO 2768 - m H
< 6 mm: ±0.2 mm

Ⓐ = Bearing of mating shaft
Ⓚ = Required mating dimensions
Ⓜ = Measuring point for operating temperature
Ⓗ1 = Cylinder head screw ISO 4762-M3 with ISO 7092 (3x) washer. Tightening torque 0.9±0.05 Nm
Ⓗ2 = SW2.0 (6x). Evenly tighten crosswise with increasing tightening torque; final tightening torque 0.5±0.05 Nm
Ⓗ3 = Shaft detent: For function, see Mounting Instructions
Ⓗ4 = PCB connector, 15-pin
Ⓗ5 = Compensation of mounting tolerances and thermal expansion, no dynamic motion
Ⓗ6 = Protection as per EN 60 529
Ⓗ7 = Required up to max. Ø 92 mm
Ⓗ8 = Required mounting frame for output cable with cable clamp (accessory). Bending radius of connecting wires min. R3
Ⓗ9 = Direction of shaft rotation for output signals as per the interface description

	Absolute		
	ECI 119		**EBI 135**
Interface	EnDat 2.1	EnDat 2.2	EnDat 2.2
Order designation*	EnDat01	EnDat22[1]	EnDat22[1]
Position values per revolution	524288 (19 bits)		
Revolutions	–		65536 (16 bits)[2]
Elec. permissible speed/ Deviations[3]	≤ 3750 min^{-1}/± 128 LSB ≤ 6000 min^{-1}/± 512 LSB	≤ 6000 min^{-1} (for continuous position value)	
Calculation time t_{cal} Clock frequency	≤ 8 µs ≤ 2 MHz	≤ 6 µs ≤ 16 MHz	
Incremental signals	~ 1 V_{PP}	–	–
Line count	32	–	–
Cutoff frequency –3 dB	≥ 6 kHz typical	–	–
System accuracy	± 90"		
Electrical connection via PCB connector	15-pin	15-pin (with connection for temperature sensor [5])	
Voltage supply	3.6 V to 14 V DC		*Rotary encoders* U_P: 3.6 V to 14 V DC *Buffer battery* U_{BAT}: 3.6 V to 5.25 V DC
Power consumption (max.)	*3.6 V:* ≤ 580 mW *14 V:* ≤ 700 mW	*Normal operation with 3.6 V:* 530 mW *Normal operation with 14 V:* 630 mW	
Current consumption (typical)	*5 V:* 80 mA (without load)	*5 V:* 75 mA (without load)	*Normal operation with 5 V:* 75 mA (without load) *Buffer battery*[4]: 25 µA (with rotating shaft) 12 µA (at standstill)
Shaft*	Hollow through shaft D = 30 mm, 38 mm, 50 mm		
Mech. permiss. speed n	≤ 6000 min^{-1}		
Moment of inertia of rotor	*D = 30 mm:* 64 · 10^{-6} kgm^2 *D = 38 mm:* 58 · 10^{-6} kgm^2 *D = 50 mm:* 64 · 10^{-6} kgm^2		
Permissible axial motion of measured shaft	± 0.3 mm		
Vibration 55 to 2000 Hz[6] **Shock** 6 ms	≤ 300 m/s^2 (EN 60068-2-6) ≤ 1000 m/s^2 (EN 60068-2-27)		
Max. operating temp.	115 °C		
Min. operating temp.	–20 °C		
Protection EN 60529	IP 20 when mounted[7]		
Weight	*D = 30 mm:* approx. 0.19 kg *D = 38 mm:* approx. 0.16 kg *D = 50 mm:* approx. 0.14 kg		

***** Please select when ordering

[1] Online diagnostics not supported.

[2] Compliance with the EnDat specification 297403 and the EnDat Application Notes 722024, Chapter 11, *Battery-buffered encoders* are required for correct control of the encoder.

[3] Velocity-dependent deviations between the absolute and incremental signals

[4] At T = 25 °C; U_{BAT} = 3.6 V

[5] Evaluation optimized for KTY 84-130

[6] 10 to 55 Hz constant over distance 4.9 mm peak to peak

[7] CE compliance of the complete system must be ensured by taking the correct measures during installation.

ERO 1200 series

Incremental rotary encoders
- **Flange for axis mounting**
- **Hollow through shaft**
- **Without integral bearing**



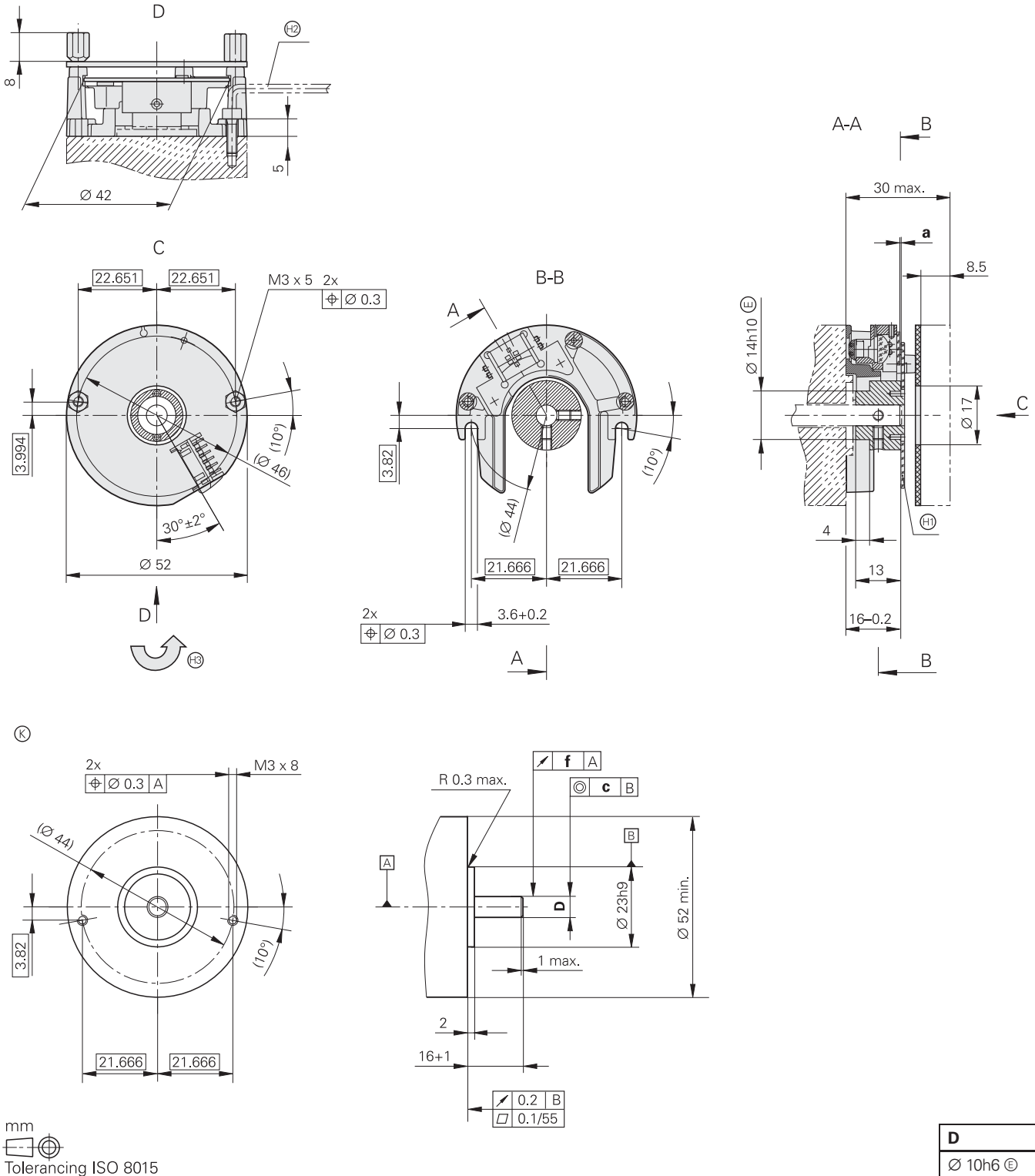

mm

Tolerancing ISO 8015
ISO 2768 - m H
< 6 mm: ±0.2 mm

D
Ø 10h6 Ⓔ
Ø 12h6 Ⓔ

	Z	a	f	c
ERO 1225	1024	0.6 ± 0.2	Ø 0.05	Ø 0.02
	2048	0.2 ± 0.05		
ERO 1285	1024 2048	0.2 ± 0.03	Ø 0.03	Ø 0.02

Ⓐ = Bearing
Ⓚ = Required mating dimensions
Ⓗ1 = Disk/hub assembly
Ⓗ2 = Offset screwdriver ISO 2936 – 2.5 (I_2 shortened)
Ⓗ3 = Direction of shaft rotation for output signals as per the interface description

	Incremental	
	ERO 1225	**ERO 1285**
Interface	⊓⊔TTL	∿ 1 V_{PP}
Line count*	1024 2048	
Accuracy of the graduation[2]	± 6"	
Reference mark	One	
Scanning frequency Edge separation a Cutoff frequency –3 dB	≤ 300 kHz ≥ 0.39 µs –	– – ≥ Typically 180 kHz
System accuracy[1]	*1024 lines:* ± 92" *2048 lines:* ± 73"	*1024 lines:* ± 67" *2048 lines:* ± 60"
Electrical connection	Via 12-pin PCB connector	
Voltage supply	5 V DC ± 10 %	
Current consumption (without load)	≤ 150 mA	
Shaft*	Hollow through shaft Ø 10 mm or Ø 12 mm	
Moment of inertia of rotor	*Shaft Ø 10 mm:* $2.2 \cdot 10^{-6}$ kgm^2 *Shaft Ø 12 mm:* $2.15 \cdot 10^{-6}$ kgm^2	
Mech. permiss. speed n	≤ 25000 min^{-1}	
Permissible axial motion of measured shaft	*1024 lines:* ± 0.2 mm *2048 lines:* ± 0.05 mm	± 0.03 mm
Vibration 55 to 2000 Hz **Shock** 6 ms	≤ 100 m/s^2 (EN 60068-2-6) ≤ 1000 m/s^2 (EN 60068-2-27)	
Max. operating temp.	100 °C	
Min. operating temp.	–40 °C	
Protection EN 60529	IP 00 [3]	
Weight	Approx. 0.07 kg	

***** Please select when ordering
[1] Without installation. Additional error caused by mounting inaccuracy and inaccuracy from the bearing of the measured shaft is not included.
[2] For other errors, see *Measuring accuracy*
[3] CE compliance of the complete system must be ensured by taking the correct measures during installation.

ERO 1400 series



Incremental rotary encoders
- **Flange for axis mounting**
- **Hollow through shaft**
- **Without integral bearing; self-centering**

With cable outlet

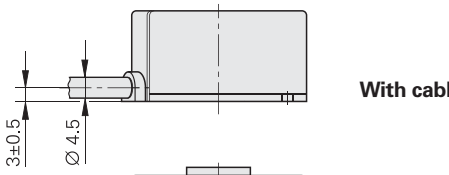

With axial PCB connector

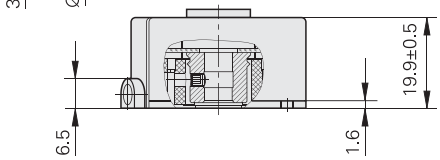

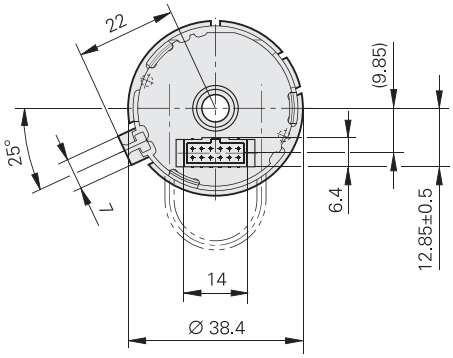

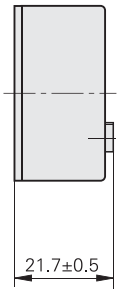

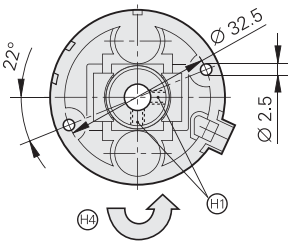

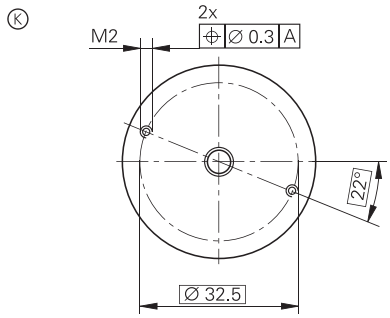

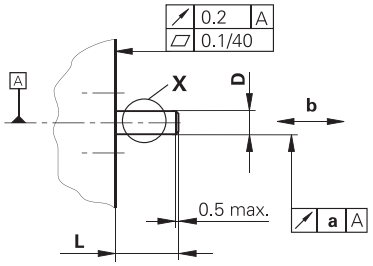

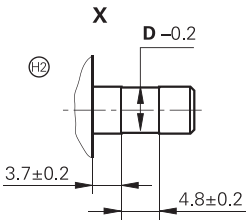

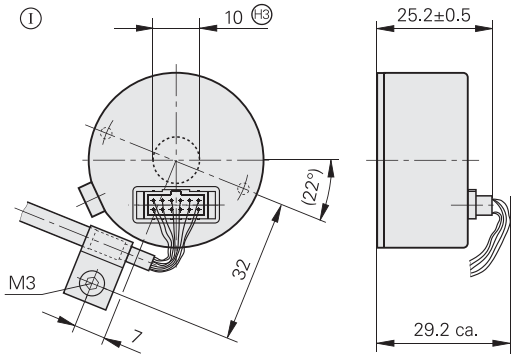

Axial PCB connector and round cable

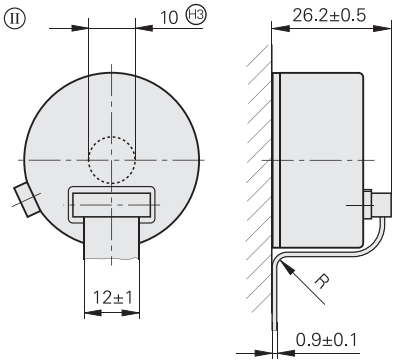

Axial PCB connector and ribbon cable

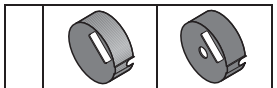

L	13+4.5/–3	10 min.

mm

Tolerancing ISO 8015
ISO 2768 - m H
< 6 mm: ±0.2 mm

A = Bearing
K = Required mating dimensions
I = Accessory: Round cable
II = Accessory: Ribbon cable
H1 = Setscrew, 2x90° offset, M3, width A/F 1.5 Md = 0.25 ±0.05 Nm
H2 = Version for repeated assembly
H3 = Version featuring housing with central hole (accessory)
H4 = Direction of shaft rotation for output signals as per the interface description

Bend radius R	**Fixed cable**	**Moving cable**
Ribbon cable	R ≥ 2 mm	R ≥ 10 mm

	a	**b**
ERO 1420	0.03	± 0.1
ERO 1470	0.02	± 0.05
ERO 1480		

D
Ø 4h6 E
Ø 6h6 E
Ø 8h6 E

	Incremental					
	ERO 1420	**ERO 1470**				**ERO 1480**
Interface	⊓⊔TTL					∿ 1 V_{PP}
Line count*	512 **1000** **1024**	**1000** 1500				512 **1000** **1024**
Integrated interpolation*	–	5-fold	**10-fold**	20-fold	25-fold	–
Signal periods/revolution	512 1000 1024	5000 7500	10000 15000	20000 30000	25000 37500	512 1000 1024
Edge separation a	≥ 0.39 µs	≥ 0.47 µs	≥ 0.22 µs	≥ 0.17 µs	≥ 0.07 µs	–
Scanning frequency	≤ 300 kHz	≤ 100 kHz		≤ 62.5 kHz	≤ 100 kHz	–
Cutoff frequency –3 dB	–					≥ 180 kHz
Reference mark	One					
System accuracy[1]	*512 lines:* ± 139" *1000 lines:* ± 112" *1024 lines:* ± 112"	*1000 lines:* ± 130" *1500 lines:* ± 114"				*512 lines:* ± 190" *1000 lines:* ± 163" *1024 lines:* ± 163"
Electrical connection*	• Over 12-pin axial **PCB connector** • Cable 1 m, radial, without connecting element (not with ERO 1470)					
Voltage supply	5 V DC ± 0.5 V	5 V DC ± 0.25 V				5 V DC ± 0.5 V
Current consumption (without load)	≤ 150 mA	≤ 155 mA		≤ 200 mA		≤ 150 mA
Shaft*	**Blind hollow shaft** ∅ 4 mm; **∅ 6 mm** or ∅ 8 mm or hollow through shaft in housing with bore (accessory)					
Moment of inertia of rotor	*Shaft ∅ 4 mm:* 0.28 · 10^{-6} kgm^2 *Shaft ∅ 6 mm:* 0.27 · 10^{-6} kgm^2 *Shaft ∅ 8 mm:* 0.25 · 10^{-6} kgm^2					
Mech. permiss. speed n	≤ 30000 min^{-1}					
Permissible axial motion of measured shaft	± 0.1 mm	± 0.05 mm				
Vibration 55 to 2000 Hz **Shock** 6 ms	≤ 100 m/s^2 (EN 60068-2-6) ≤ 1000 m/s^2 (EN 60068-2-27)					
Max. operating temp.	70 °C					
Min. operating temp.	–10 °C					
Protection EN 60529	*With PCB connector:* IP 00[2] *With cable outlet:* IP 40					
Weight	Approx. 0.07 kg					

Bold: These preferred versions are available on short notice
***** Please select when ordering
[1] Without installation. Additional error caused by mounting inaccuracy and inaccuracy from the bearing of the measured shaft is not included.
[2] CE compliance of the complete system must be ensured by taking the correct measures during installation.

Interfaces
Incremental signals ∿ 1 V_{PP}

HEIDENHAIN encoders with ∿ 1 V_{PP} interface provide voltage signals that can be highly interpolated.

The sinusoidal **incremental signals** A and B are phase-shifted by 90° elec. and have an amplitude of typically 1 V_{PP}. The illustrated sequence of output signals—with B lagging A—applies for the direction of motion shown in the dimension drawing.

The **reference mark signal** R has an unambiguous assignment to the incremental signals. The output signal might be somewhat lower next to the reference mark.

Comprehensive descriptions of all available interfaces as well as general electrical information is included in the *Interfaces for HEIDENHAIN Encoders* brochure, ID 1078628-xx.

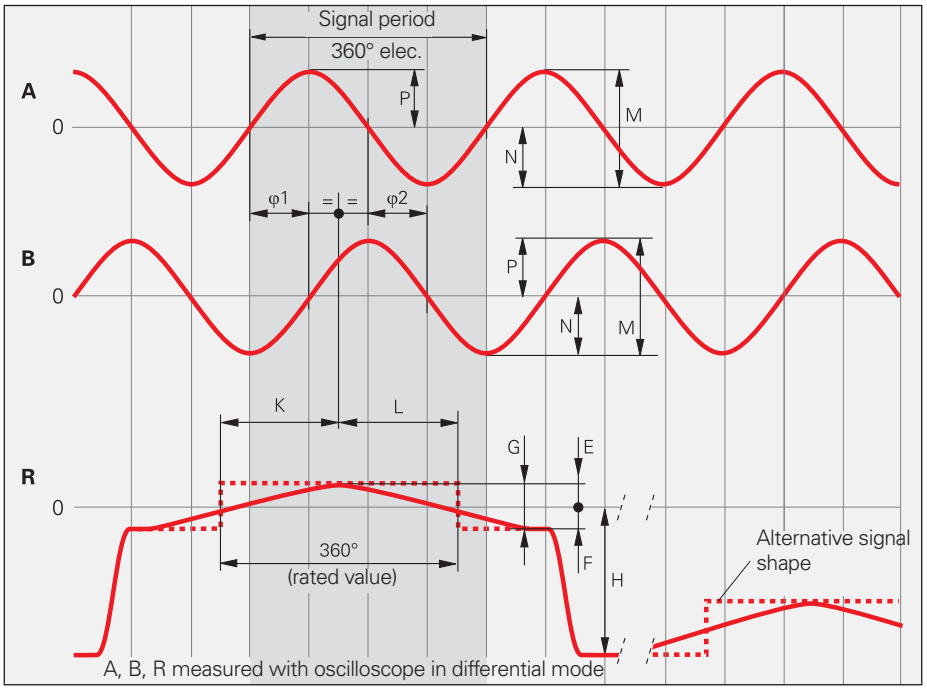

Pin layout

12-pin coupling, M23

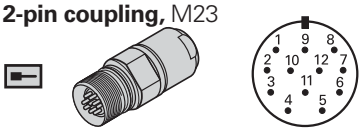

15-pin D-sub connector for PWM 20

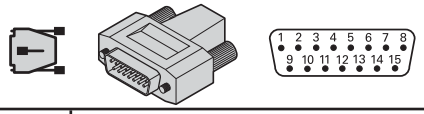

12-pin PCB connector

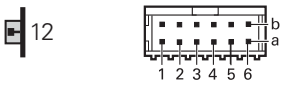

	Power supply				Incremental signals						Other signals		
	12	**2**	**10**	**11**	**5**	**6**	**8**	**1**	**3**	**4**	**9**	**7**	**/**
	4	**12**	**2**	**10**	**1**	**9**	**3**	**11**	**14**	**7**	**5/6/8/15**	**13**	**/**
12	**2a**	**2b**	**1a**	**1b**	**6b**	**6a**	**5b**	**5a**	**4b**	**4a**	**3b**	**3a**	**/**
	U_P	**Sensor**[1] U_P	**0 V**	**Sensor**[1] 0 V	**A+**	**A–**	**B+**	**B–**	**R+**	**R–**	**Vacant**	**Vacant**	**Vacant**
	Brown/ Green	Blue	White/ Green	White	Brown	Green	Gray	Pink	Red	Black	/	Violet	Yellow

Output cable for ERN 1381 in the motor
ID 667343-01

17-pin flange socket, M23

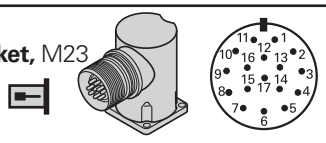

12-pin PCB connector

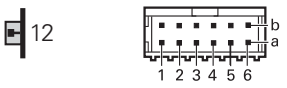

	Power supply				Incremental signals						Other signals		
	7	**1**	**10**	**4**	**15**	**16**	**12**	**13**	**3**	**2**	**5**	**6**	**8/9/11/ 14/17**
12	**2a**	**2b**	**1a**	**1b**	**6b**	**6a**	**5b**	**5a**	**4b**	**4a**	**/**	**/**	**3a/3b**
	U_P	**Sensor** U_P	**0 V**	**Sensor** 0 V	**A+**	**A–**	**B+**	**B–**	**R+**	**R–**	**T+**[2]	**T–**[2]	**Vacant**
	Brown/ Green	Blue	White/ Green	White	Brown	Green	Gray	Pink	Red	Black	Brown[2]	White[2]	/

Cable shield connected to housing; **U_P** = power supply; [1] **LIDA 2xx:** vacant; [2] Only for encoder cable inside the motor housing
Sensor: The sensor line is connected in the encoder with the corresponding power line.
Vacant pins or wires must not be used!

Incremental signals ⊓⊔TTL

HEIDENHAIN encoders with ⊓⊔TTL interface incorporate electronics that digitize sinusoidal scanning signals with or without interpolation.

The **incremental signals** are transmitted as the square-wave pulse trains U_{a1} and U_{a2}, phase-shifted by 90° elec. The **reference mark signal** consists of one or more reference pulses U_{a0}, which are gated with the incremental signals. In addition, the integrated electronics produce their **inverted signals** $\overline{U_{a1}}$, $\overline{U_{a2}}$ and $\overline{U_{a0}}$ for noise-proof transmission. The illustrated sequence of output signals—with U_{a2} lagging U_{a1}—applies to the direction of motion shown in the dimension drawing.

The **fault detection signal** $\overline{U_{aS}}$ indicates fault conditions such as an interruption in the supply lines, failure of the light source, etc.

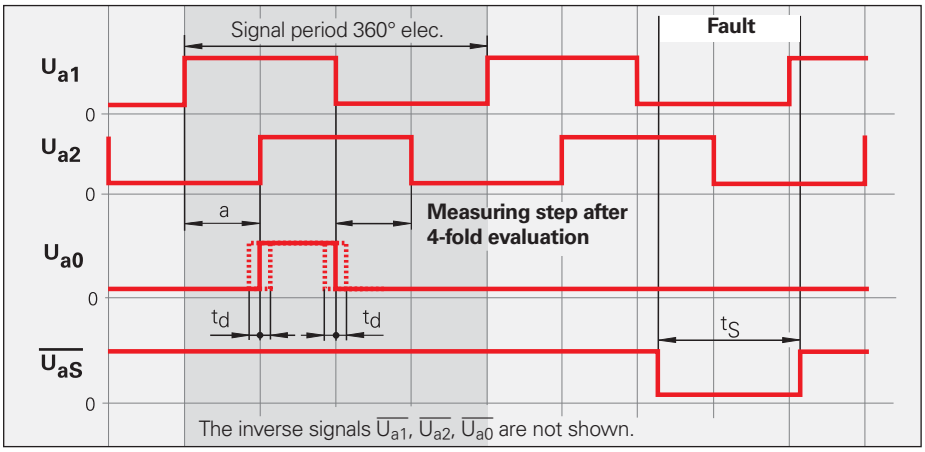

The distance between two successive edges of the incremental signals U_{a1} and U_{a2} through 1-fold, 2-fold or 4-fold evaluation is one **measuring step.**

Comprehensive descriptions of all available interfaces as well as general electrical information is included in the *Interfaces for HEIDENHAIN Encoders* brochure, ID 1078628-xx.

Pin layout

12-pin flange socket or coupling, M23

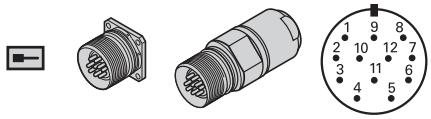

12-pin Connector M23

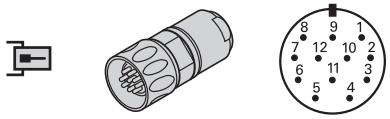

15-pin D-sub connector For IK 215/PWM 20

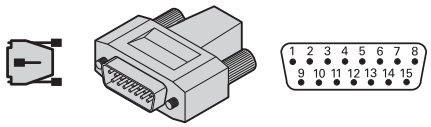

12-pin PCB connector



	Power supply				Incremental signals						Other signals		
	12	**2**	**10**	**11**	**5**	**6**	**8**	**1**	**3**	**4**	**7**	**/**	**9**
	4	**12**	**2**	**10**	**1**	**9**	**3**	**11**	**14**	**7**	**13**	**5/6/8**	**15**
12	**2a**	**2b**[1]	**1a**	**1b**[1]	**6b**	**6a**	**5b**	**5a**	**4b**	**4a**	**3a**	**3b**	**/**
	U_P	**Sensor** U_P	**0 V**	**Sensor** 0 V	**U_{a1}**	**$\overline{U_{a1}}$**	**U_{a2}**	**$\overline{U_{a2}}$**	**U_{a0}**	**$\overline{U_{a0}}$**	**$\overline{U_{aS}}$**[1]	**Vacant**	**Vacant**[2]
	Brown/ Green	Blue	White/ Green	White	Brown	Green	Gray	Pink	Red	Black	Violet	/	Yellow

Cable shield connected to housing; **U_P** = power supply voltage
Sensor: The sensor line is connected in the encoder with the corresponding power line.
Vacant pins or wires must not be used!
[1] **ERO 14xx:** Vacant
[2] **Exposed linear encoders:** Switchover TTL/11 μA_{PP} for PWT, otherwise vacant

Pin layout

Output cable for ERN 1321 in the motor
ID 667343-01

17-pin flange socket, M23

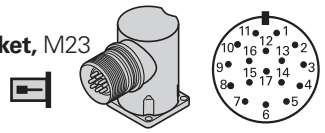

12-pin PCB connector

12

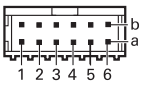

	Power supply				Incremental signals						Other signals		
	7	**1**	**10**	**4**	**15**	**16**	**12**	**13**	**3**	**2**	**5**	**6**	**8/9/11/ 14/17**
12	**2a**	**2b**	**1a**	**1b**	**6b**	**6a**	**5b**	**5a**	**4b**	**4a**	**/**	**/**	**3a/3b**
	U_P	**Sensor** U_P	**0 V**	**Sensor** 0 V	**U_{a1}**	**$\overline{U_{a1}}$**	**U_{a2}**	**$\overline{U_{a2}}$**	**U_{a0}**	**$\overline{U_{a0}}$**	**T+**[1]	**T–**[1]	**Vacant**
	Brown/ Green	Blue	White/ Green	White	Brown	Green	Gray	Pink	Red	Black	Brown[1]	White[1]	/

ERN 421 pin layout

12-pin Binder flange socket



	Power supply				Incremental signals						Other signals	
	M	**B**	**K**	**L**	**E**	**F**	**H**	**A**	**C**	**D**	**G**	**J**
	U_P	**Sensor** U_P	**0 V**	**Sensor** 0 V	**U_{a1}**	**$\overline{U_{a1}}$**	**U_{a2}**	**$\overline{U_{a2}}$**	**U_{a0}**	**$\overline{U_{a0}}$**	**$\overline{U_{aS}}$**	**Vacant**
	Brown/ Green	Blue	White/ Green	White	Brown	Green	Gray	Pink	Red	Black	Violet	Yellow

Cable shield connected to housing; **U_P** = power supply voltage
Sensor: The sensor line is connected in the encoder with the corresponding power line.
Vacant pins or wires must not be used!
[1] Only for encoder cable inside the motor housing

Incremental signals ⊓⊔ HTL, HTLs

HEIDENHAIN encoders with ⊓⊔ HTL interface incorporate electronics that digitize sinusoidal scanning signals with or without interpolation.

The **incremental signals** are transmitted as the square-wave pulse trains U_{a1} and U_{a2}, phase-shifted by 90° elec. The **reference mark signal** consists of one or more reference pulses U_{a0}, which are gated with the incremental signals. In addition, the integrated electronics produce their **inverted signals** $\overline{U_{a1}}$, $\overline{U_{a2}}$ and $\overline{U_{a0}}$ for noise-proof transmission (does not apply to HTLs). The illustrated sequence of output signals—with U_{a2} lagging U_{a1}—applies to the direction of motion shown in the dimension drawing.

The **fault detection signal** $\overline{U_{aS}}$ indicates fault conditions, for example a failure of the light source.

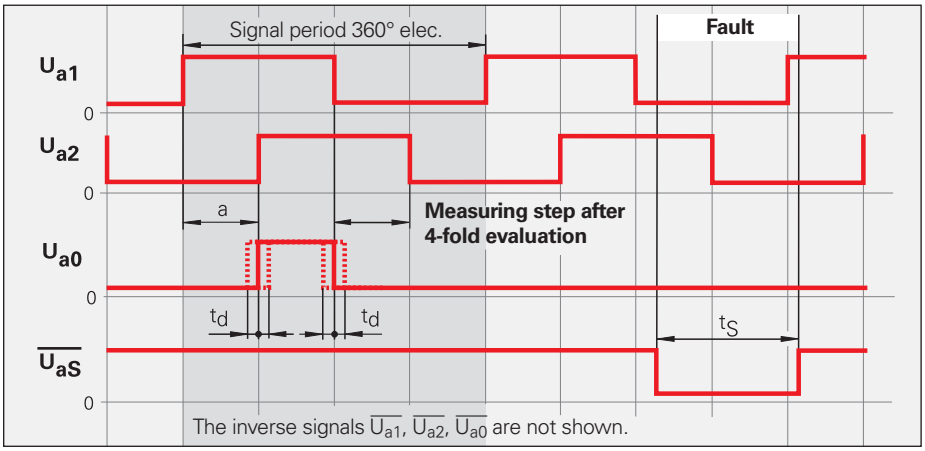

The distance between two successive edges of the incremental signals U_{a1} and U_{a2} through 1-fold, 2-fold or 4-fold evaluation is one **measuring step.**

Comprehensive descriptions of all available interfaces as well as general electrical information is included in the *Interfaces for HEIDENHAIN Encoders* brochure, ID 1078628-xx.

ERN 431 pin layout

12-pin Binder flange socket



	Power supply				Incremental signals						Other signals	
	M	**B**	**K**	**L**	**E**	**F**	**H**	**A**	**C**	**D**	**G**	**J**
	U_P	**Sensor** U_P	**0 V**	**Sensor** 0 V	**U_{a1}**	**$\overline{U_{a1}}$**	**U_{a2}**	**$\overline{U_{a2}}$**	**U_{a0}**	**$\overline{U_{a0}}$**	**$\overline{U_{aS}}$**	**Vacant**
	Brown/ Green	Blue	White/ Green	White	Brown	Green	Gray	Pink	Red	Black	Violet	Yellow

Cable shield connected to housing; **U_P** = power supply voltage
Sensor: The sensor line is connected in the encoder with the corresponding power line.
Vacant pins or wires must not be used!

Commutation signals for block commutation

The **block commutation signals U, V and W** are derived from three separate absolute tracks. They are transmitted as square-wave signals in TTL levels.

The **ERN 1x23** and **ERN 1326** are rotary encoders with commutation signals for block commutation.

Comprehensive descriptions of all available interfaces as well as general electrical information is included in the *Interfaces for HEIDENHAIN Encoders* brochure, ID 1078628-xx.

ERN 1123, ERN 1326 pin layout

17-pin flange socket, M23

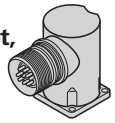



16-pin PCB connector

16

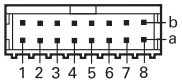

15-pin PCB connector

15

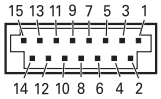

	Power supply				Incremental signals					
	7	**1**	**10**	**11**	**15**	**16**	**12**	**13**	**3**	**2**
16	**1b**	**2b**	**1a**	**/**	**5b**	**5a**	**4b**	**4a**	**3b**	**3a**
15	**13**	**/**	**14**	**/**	**1**	**2**	**3**	**4**	**5**	**6**
	U_P	**Sensor** U_P	**0 V**	**Internal shield**	**U_{a1}**	**$\overline{U_{a1}}$**	**U_{a2}**	**$\overline{U_{a2}}$**	**U_{a0}**	**$\overline{U_{a0}}$**
	Brown/ Green	Blue	White/ Green	/	Green/ Black	Yellow/ Black	Blue/ Black	Red/ Black	Red	Black

	Other signals						
	4	**5**	**6**	**14**	**17**	**9**	**8**
16	**2a**	**8b**	**8a**	**6b**	**6a**	**7b**	**7a**
15	**/**	**7**	**8**	**9**	**10**	**11**	**12**
	$\overline{U_{aS}}$	**U**	**$\overline{U}$**	**V**	**$\overline{V}$**	**W**	**$\overline{W}$**
	White	Green	Brown	Yellow	Violet	Gray	Pink

Cable shield connected to housing;
U_P = Power supply voltage
Sensor: The sensor line is connected in the encoder with the corresponding power line.
Vacant pins or wires must not be used!

Pin layout for ERN 1023

	Power supply		Incremental signals						Other signals					
	U_P	**0 V**	**U_{a1}**	**$\overline{U_{a1}}$**	**U_{a2}**	**$\overline{U_{a2}}$**	**U_{a0}**	**$\overline{U_{a0}}$**	**U**	**$\overline{U}$**	**V**	**$\overline{V}$**	**W**	**$\overline{W}$**
	White	Black	Red	Pink	Olive Green	Blue	Yellow	Orange	Beige	Brown	Green	Gray	Light Blue	Violet

Cable shield connected to housing;
U_P = Power supply voltage
Vacant pins or wires must not be used!

Commutation signals for sinusoidal commutation

The **commutation signals C and D** are taken from the Z1 track and form one sine or cosine period per revolution. They have a signal amplitude of typically 1 V_{PP} at 1 kΩ. The input circuitry of the subsequent electronics is the same as for the ⌒ 1 V_{PP} interface. The required terminating resistor of Z_0, however, is 1 kΩ instead of 120 Ω.

The **ERN 1387** is a rotary encoder with output signals for sinusoidal commutation.

Comprehensive descriptions of all available interfaces as well as general electrical information is included in the *Interfaces for HEIDENHAIN Encoders* brochure, ID 1078628-xx.

Pin layout

17-pin coupling or flange socket M23

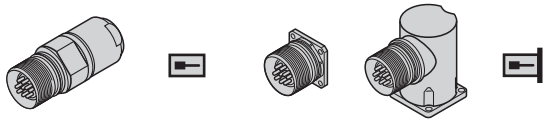

14-pin PCB connector

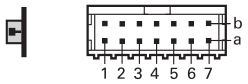

	Power supply					Incremental signals					
	7	**1**	**10**	**4**	**11**	**15**	**16**	**12**	**13**	**3**	**2**
	1b	**7a**	**5b**	**3a**	**/**	**6b**	**2a**	**3b**	**5a**	**4b**	**4a**
	U_P	**Sensor** U_P	**0 V**	**Sensor** 0 V	**Internal shield**	**A+**	**A–**	**B+**	**B–**	**R+**	**R–**
	Brown/ Green	Blue	White/ Green	White	/	Green/ Black	Yellow/ Black	Blue/ Black	Red/ Black	Red	Black

	Other signals					
	14	**17**	**9**	**8**	**5**	**6**
	7b	**1a**	**2b**	**6a**	**/**	**/**
	C+	**C–**	**D+**	**D–**	**T+**[1)]	**T–**[1)]
	Gray	Pink	Yellow	Violet	Green	Brown

Cable shield connected to housing;
U_P = Power supply; **T** = Temperature
Sensor: The sensor line is connected internally with the corresponding power line.
Vacant pins or wires must not be used!
[1)] Only for motor-internal adapter cables

Position values EnDat

The EnDat interface is a digital, **bidirectional** interface for encoders. It is capable both of transmitting **position values** as well as transmitting or updating information stored in the encoder, or saving new information. Thanks to the **serial transmission method**, only **four signal lines** are required. The DATA data is transmitted in **synchronism** with the CLOCK signal from the subsequent electronics. The type of transmission (position values, parameters, diagnostics, etc.) is selected through mode commands that the subsequent electronics send to the encoder. Some functions are available only with EnDat 2.2 mode commands.

Comprehensive descriptions of all available interfaces as well as general electrical information is included in the *Interfaces for HEIDENHAIN Encoders* brochure, ID 1078628-xx.

Ordering designation	Command set	Incremental signals
EnDat01	EnDat 2.1 or EnDat 2.2	With
EnDat21		Without
EnDat02	EnDat 2.2	With
EnDat22	EnDat 2.2	Without

Versions of the EnDat interface

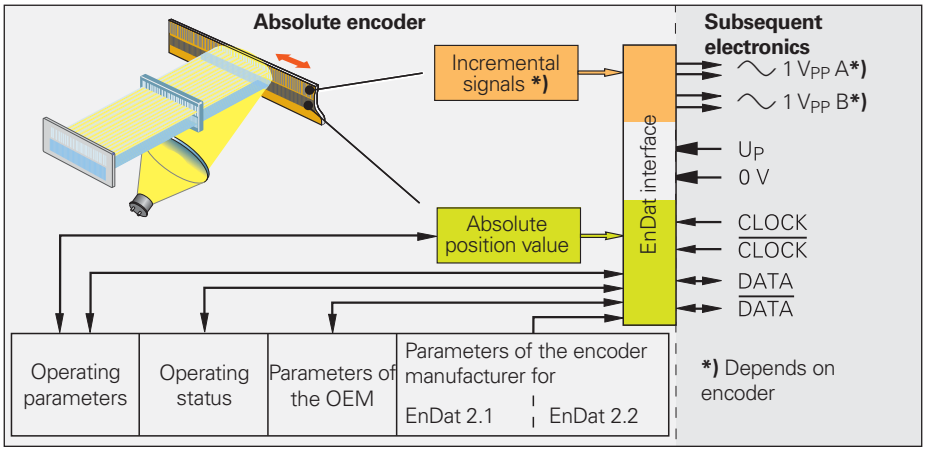

Pin layout

17-pin coupling or flange socket M23

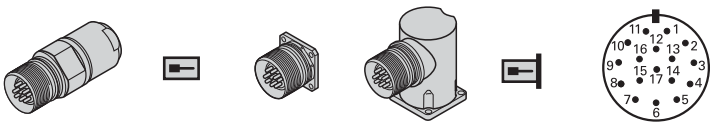

12-pin PCB connector

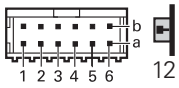

15-pin PCB connector

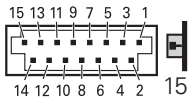

	Power supply					Incremental signals[1]				Position values			
	7	**1**	**10**	**4**	**11**	**15**	**16**	**12**	**13**	**14**	**17**	**8**	**9**
12	**1b**	**6a**	**4b**	**3a**	**/**	**2a**	**5b**	**4a**	**3b**	**6b**	**1a**	**2b**	**5a**
15	**13**	**11**	**14**	**12**	**/**	**1**	**2**	**3**	**4**	**7**	**8**	**9**	**10**
	UP	**Sensor** UP	**0 V**	**Sensor** 0 V	**Internal shield**	**A+**	**A–**	**B+**	**B–**	**DATA**	**$\overline{\text{DATA}}$**	**CLOCK**	**$\overline{\text{CLOCK}}$**
	Brown/ Green	Blue	White/ Green	White	/	Green/ Black	Yellow/ Black	Blue/ Black	Red/ Black	Gray	Pink	Violet	Yellow

	Other signals	
	5	**6**
12	**/**	**/**
15	**/**	**/**
	T+[2]	**T–**[2]
	Brown[2]	White[2]

Cable shield connected to housing; **UP** = power supply voltage; **T** = Temperature
Sensor: The sensor line is connected in the encoder with the corresponding power line.
Vacant pins or wires must not be used!
[1] Only with ordering designations EnDat 01 and EnDat 02
[2] Only with output cables inside the motor

Pin layout

8-pin coupling or flange socket M12

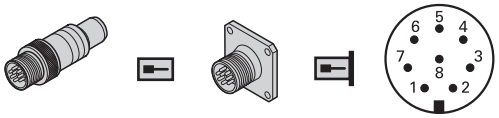

9-pin flange socket, M23

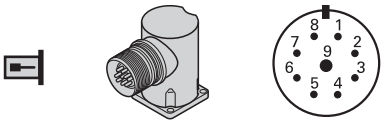

4-pin PCB connector

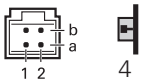

12-pin PCB connector

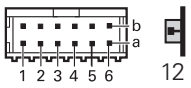

15-pin PCB connector

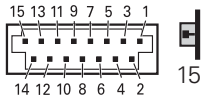

	Power supply				Position values				Other signals[3]			
M12	**8**	**2**	**5**	**1**	**3**	**4**	**7**	**6**	**/**	**/**	**/**	**/**
M23	**3**	**7**	**4**	**8**	**5**	**6**	**1**	**2**	**/**	**/**	**/**	**/**
4	**/**	**/**	**/**	**/**	**/**	**/**	**/**	**/**	**1a**	**1b**	**/**	**/**
12	**1b**	**6a**	**4b**	**3a**	**6b**	**1a**	**2b**	**5a**	**/**	**/**	**/**	**/**
15	**13**	**11**	**14**	**12**	**7**	**8**	**9**	**10**	**5**	**6**	**/**	**/**
	U_P	**Sensor** U_P[2]	**0 V**	**Sensor** 0 V[2]	**DATA**	**$\overline{\text{DATA}}$**	**CLOCK**	**$\overline{\text{CLOCK}}$**	**T+**[3]	**T–**[3]	**T+**[1] [3]	**T–**[1] [3]
	Brown/ Green	Blue	White/ Green	White	Gray	Pink	Violet	Yellow	Brown	Green	Brown	[4]

Cable shield connected to housing; **U_P** = power supply voltage; **T** = Temperature
Sensor: The sensor line is connected in the encoder with the corresponding power line.
Vacant pins or wires must not be used!
[1] Connections for external temperature sensor; connection in the M23 flange socket
[2] **ECI 1118 EnDat22:** Vacant
[3] Only EnDat22, except ECI 1118
[4] White with M23 flange socket; green with M12 flange socket

Pin layout of EBI 135/EBI 1135

15-pin
PCB connector



8-pin flange socket
M12

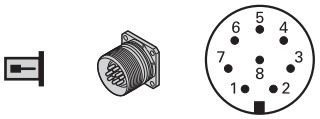

9-pin flange socket
M23

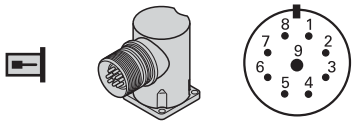

	Power supply				Position values				Other signals[1]	
15	**13**	**11**	**14**	**12**	**7**	**8**	**9**	**10**	**5**	**6**
M12	**8**	**2**	**5**	**1**	**3**	**4**	**7**	**6**	**/**	**/**
M23	**3**	**7**	**4**	**8**	**5**	**6**	**1**	**2**	**/**	**/**
	U_P	**U_{BAT}**	**0 V**	**0 V_{BAT}**	**DATA**	**$\overline{DATA}$**	**CLOCK**	**$\overline{CLOCK}$**	**T+**	**T–**
	Brown/ Green	Blue	White/ Green	White	Gray	Pink	Violet	Yellow	Brown	Green

U_P = power supply; **U_{BAT}** = external buffer battery (false polarity can result in damage to the encoder)
Vacant pins or wires must not be used!
[1] Only for EBI 135 with cable ID 824632-xx

EBI 135/EBI 1135 – external buffer battery

The multiturn function of the EBI 135 and EBI 1135 is realized through a revolution counter. To prevent loss of the absolute position information during power failure, the EBI must be driven with an external buffer battery.

A lithium thionyl chloride battery with 3.6 V and 1 500 mAh is recommended as buffer battery. A service life of over 10 years in appropriate conditions (one EBI per battery; ambient temperature 25 °C; shaft at standstill, self-discharge < 1 % per year) can be expected. To achieve this, the main power supply (U_P) must be connected to the encoder while connecting the buffer battery, or directly thereafter, in order for the encoder to become fully initialized after having been completely powerless. Otherwise the encoder will consume a significantly higher amount of battery current until main power is supplied the first time.

Ensure correct polarity of the buffer battery in order to avoid damage to the encoder.

If the application requires compliance with DIN EN 60086-4 or UL 1642, an appropriate protective circuit is required for protection from wiring errors.

If the battery voltage falls below certain limits, the EBI issues warnings or error messages over the EnDat interface:

- **"M Battery" warning**
  2.6 V to 2.9 V (typically 2.7 V)
- **"M All Power Down" error message**
  2.0 V to 2.4 V (typically 2.2 V): the encoder has to find a new reference.

The EBI uses low battery current even during normal operation. The amount of current depends on the ambient temperature.

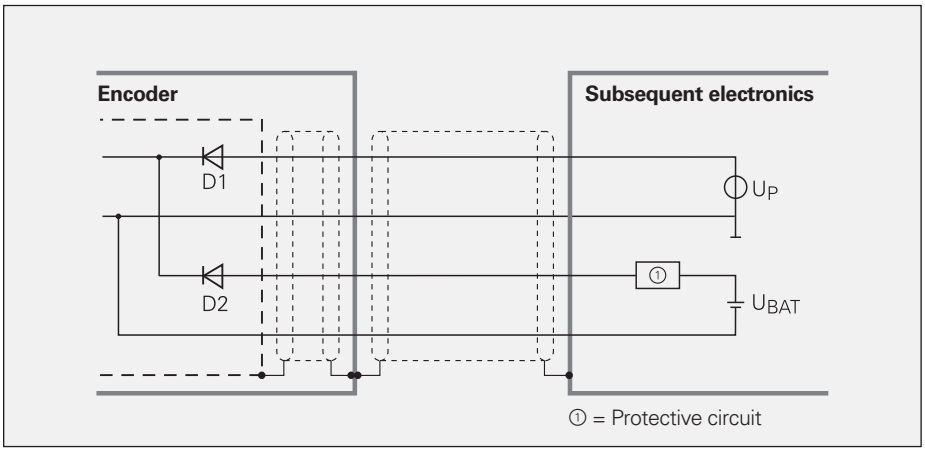

Connection of the buffer battery

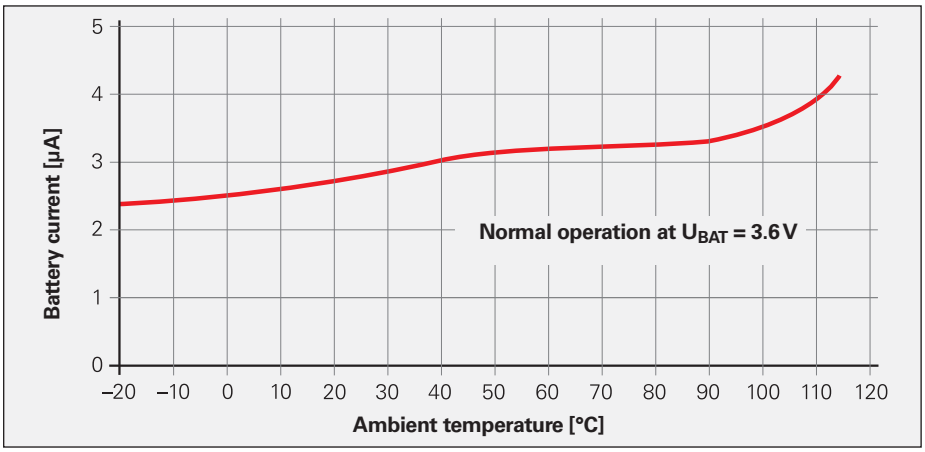

Typical discharge current in normal operation

SSI position values

The **position value** beginning with the Most Significant Bit (MSB first) is transferred on the DATA lines in synchronism with a CLOCK signal transmitted by the control. The SSI standard data word length for singleturn absolute encoders is 13 bits, and for multiturn absolute encoders 25 bits. In addition to the absolute position values, **incremental signals** can also be transmitted. For signal description see *Incremental signals 1 V_{PP}*.

The following **functions** can be activated through programming inputs:
- **Direction of rotation**
- **Zero rest** (setting to zero)

Data transfer

T = 1 to 10 µs
t_{cal} See *Specifications*
$t_1 \leq$ 0.4 µs (without cable)
t_2 = 17 to 20 µs
$t_R \geq$ 5 µs
n = Data word length
13 bits for ECN/ROC
25 bits for EQN/ROQ

$\overline{\text{CLOCK}}$ and $\overline{\text{DATA}}$ not shown

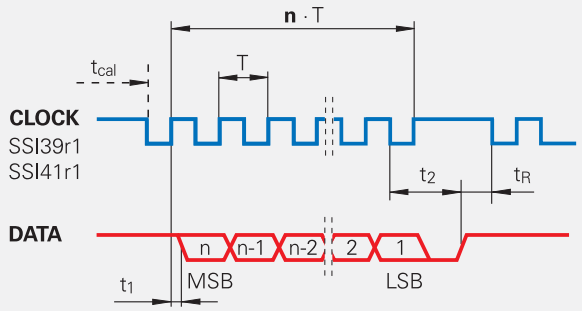

Comprehensive descriptions of all available interfaces as well as general electrical information is included in the *Interfaces for HEIDENHAIN Encoders* brochure, ID 1078628-xx.

Pin layout

17-pin coupling M23

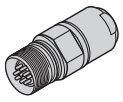



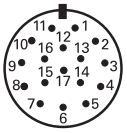

	Power supply					Incremental signals				Position values				Other signals	
	7	**1**	**10**	**4**	**11**	**15**	**16**	**12**	**13**	**14**	**17**	**8**	**9**	**2**	**5**
	U_P	**Sensor** U_P	**0 V**	**Sensor** 0 V	**Internal shield**	**A+**	**A–**	**B+**	**B–**	**DATA**	**$\overline{\text{DATA}}$**	**CLOCK**	**$\overline{\text{CLOCK}}$**	**Direction of rotation**[1]	**Zero reset**[1]
	Brown/ Green	Blue	White/ Green	White	/	Green/ Black	Yellow/ Black	Blue/ Black	Red/ Black	Gray	Pink	Violet	Yellow	Black	Green

Shield on housing; **U_P** = Power supply voltage
Sensor: With a 5 V supply voltage, the sensor line is connected in the encoder with the corresponding power line.
[1] Vacant on ECN/EQN 10xx and ROC/ROQ 10xx

Cables and connecting elements
General information

Connector (insulated): Connecting element with coupling ring; available with male or female contacts (see symbols).

Symbols

M12

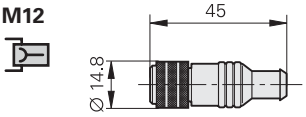

M12 right-angle connector

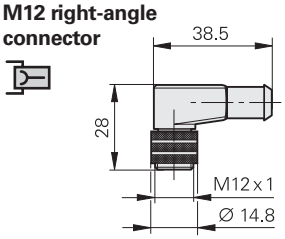

M23

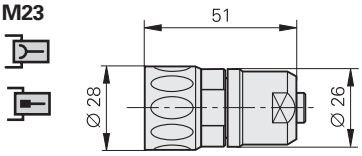

Coupling (insulated): Connecting element with external thread; available with male or female contacts (see symbols).

Symbols

M12

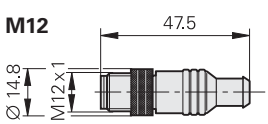

M23

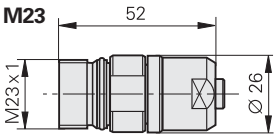

Mounted coupling with central fastening

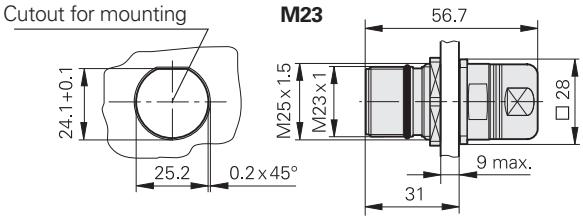

Mounted coupling with flange

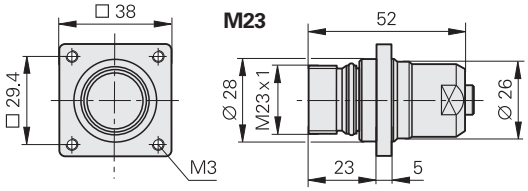

Flange socket With external thread; permanently mounted on a housing, available with male or female contacts.

Symbols

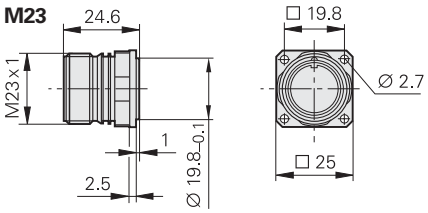

M12 **flange socket**
With motor-internal encoder cable

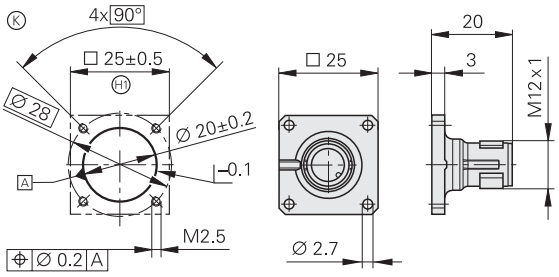

M23 **right-angle flange socket**
(Rotatable) with motor-internal encoder cable

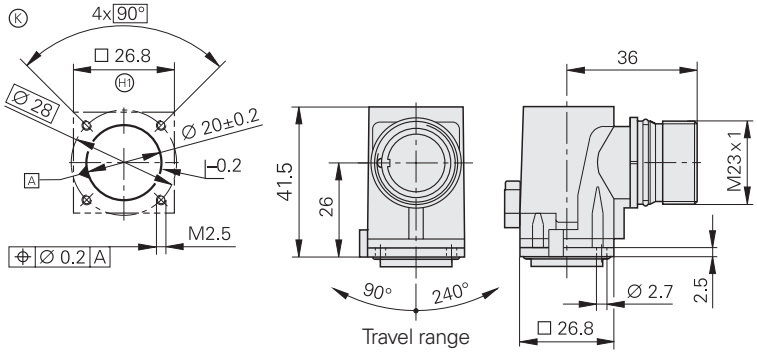

Ⓚ = Mating mounting holes
Ⓗ = Flatness 0.05 / Ra3.2

D-sub connector for HEIDENHAIN controls, counters and IK absolute value cards.

Symbols

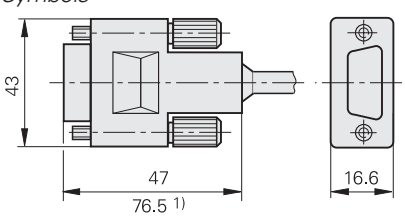

1) Interface electronics integrated in connector

The pins on connectors are **numbered** in the direction opposite to those on couplings or flange sockets, regardless of whether the connecting elements have

male or



female contacts.



When engaged, the connections are **protected** to IP 67 (D-sub connector: IP 50; EN 60529). When not engaged, there is no protection.

Accessories for flange sockets and M23 mounted couplings

Threaded metal dust cap
ID 219926-01

Accessory for M12 connecting element Insulation spacer
ID 596495-01

Cables inside the motor housing

Cables inside the motor housing Cable diameter: 4.5 mm or TPE single wire with shrink-wrap or braided sleeving Cable length: Available in fixed length increments up to the specified maximum length.				**Complete** With PCB connector and right-angle socket M23, 17-pin 
Rotary encoder	**Interface**	**PCB connector**	**Crimp sleeve**	
ECI 119	**EnDat01**	**15-pin**	**–**	–
ECI 119 **EBI 135**	**EnDat22**	**15-pin**	**–**	–
ECI 1118 **EQI 1130**	**EnDat01**	**15-pin**	**–**	–
	EnDat21	**15-pin**	**–**	–
	EnDat22	**15-pin**	**–**	–
EBI 1135	**EnDat22**	**15-pin**	**–**	–
ECI 1319 **EQI 1331**	**EnDat01**	**12-pin**	**Ø 6 mm**	332201-xx (length ≤ 0.3 m) EPG 16 x AWG30/7
	EnDat22	**12-pin** **4-pin**	**Ø 6 mm**	–
ECN 1113 **EQN 1125**	**EnDat01**	**15-pin**	**Ø 4.5 mm**	606079-xx (length ≤ 0.3 m) EPG 16 x AWG30/7
ECN 1123 **EQN 1135**	**EnDat22**	**15-pin**	**Ø 4.5 mm**	–
ECN 1313 **EQN 1325**	**EnDat01**	**12-pin**	**Ø 6 mm**	332201-xx (length ≤ 0.3 m) EPG 16 x AWG30/7
ECN 1325 **EQN 1337**	**EnDat22**	**12-pin** **4-pin**	**Ø 6 mm**	–
ERN 1123	**TTL**	**15-pin**	**–**	–
ERN 1321 **ERN 1381**	**TTL** **1 V_{PP}**	**12-pin**	**Ø 6 mm**	667343-xx (length ≤ 0.3 m) EPG 16 x AWG30/7
ERN 1326	**TTL**	**16-pin**	**Ø 6 mm**	341370-xx[3] (length ≤ 0.3 m) EPG 16 x AWG30/7
ERN 1387	**1 V_{PP}**	**14-pin**	**Ø 6 mm**	332199-xx (length ≤ 0.3 m) EPG 16 x AWG30/7
ERO 1225 **ERO 1285**	**TTL** **1 V_{PP}**	**12-pin**	**Ø 4.5 mm**	–
ERO 1420 **ERO 1470** **ERO 1480**	**TTL** **TTL** **1 V_{PP}**	**12-pin**	**Ø 4.5 mm**	–

Note: CE compliance in the complete system must be ensured for the encoder cable.
The shielding connection must be realized on the motor.

	Complete with PCB connector and 9-pin M23 right-angle socket 	**Complete** with PCB connector and M12, 8-pin flange socket, (TPE single wires with braided sleeving without shield connection) 	**Complete** with PCB connector and M23 coupling, 17-pin with mounted cable bushing 	**With one** PCB connector (free cable end or cable is cut off) 
	–	–	–	640067-xx[1] (length ≤ 2 m) EPG 16 x AWG30/7
	824632-xx[1] (length ≤ 0.3 m) EPG [6(2 x 0.09 mm²)]	–	–	826313-xx[1] (length ≤ 2 m) EPG [6(2 x 0.09 mm²)]
	–	–	675539-xx (max. 2 m) EPG 16 x AWG30/7	640030-xx[2] (length ≤ 0.15 m) TPE 12 x AWG26/19
	–	804201-xx[3] (length ≤ 0.3 m) TPE 8 x AWG26/19	675539-xx (max. 2 m) EPG 16 x AWG30/7	640030-xx[2] (length ≤ 0.15 m) TPE 12 x AWG26/19
	–	805320-xx[3] (length ≤ 0.3 m) TPE 6 x AWG26/19	–	735784-xx[2] (length ≤ 0.15 m) TPE 6 x AWG26/19
	–	804201-xx[3] (length ≤ 0.3 m) TPE 8 x AWG26/19	675539-xx (max. 2 m) EPG 16 x AWG30/7	640055-xx[2] (length ≤ 0.15 m) TPE 8 x AWG26/19
	–	–	–	332202-xx (length ≤ 2 m) EPG 16 x AWG30/7
	746254-xx (length ≤ 0.3 m) EPG [6(2 x 0.09 mm²)]	746820-xx (length ≤ 0.3 m) TPE 10 x AWG26/19	–	622540-xx (length ≤ 2 m) EPG [6(2 x 0.09 mm²)]
	–	–	–	605090-xx (length ≤ 2 m) EPG 16 x AWG30/7
	746170-xx (length ≤ 0.3 m) EPG [6(2 x 0.09 mm²)]	746795-xx (length ≤ 0.3 m) TPE 10 x AWG26/19	–	681161-xx (length ≤ 2 m) EPG [6(2 x 0.09 mm²)]
	–	–	–	332202-xx (length ≤ 2 m) EPG 16 x AWG30/7
	746254-xx (length ≤ 0.3 m) EPG [6(2 x 0.09 mm²)]	746820-xx (length ≤ 0.3 m) TPE 10 x AWG26/19	–	622540-xx (length ≤ 2 m) EPG [6(2 x 0.09 mm²)]
	–	–	–	738976-xx[2] (length ≤ 0.15 m) TPE 14 x AWG26/19
	–	–	–	333276-xx (length ≤ 6 m) EPG 16 x AWG30/7
	–	–	–	341369-xx (length ≤ 6 m) EPG 16 x AWG30/7
	–	–	–	332200-xx (length ≤ 6 m) EPG 16 x AWG30/7
	–	–	–	372164-xx[4] (length ≤ 6 m) PUR [4(2 x 0.05 mm²) + (4 x 0.14 mm²)]
	–	–	–	346439-xx[4] (length ≤ 6 m) PUR [4(2 x 0.05 mm²) + (4 x 0.14 mm²)]

[1] With cable clamp for shielding connection
[2] Single wires with heat-shrink tubing, without shield connection
[3] Without separate connections for temperature sensor
[4] Note max. temperature, see *Interfaces* catalog

Connecting cables 1 V_{PP}, TTL

12-pin
M23

PUR connecting cable [4(2 × 0.14 mm²) + (4 × 0.5 mm²)]; A_V = 0.5 mm²		**Ø 8 mm**	**~ 1 V_{PP}** **⊓⊔ TTL**
Complete with connector (female) and coupling (male)			298401-xx
Complete with connector (female) and connector (male)			298399-xx
Complete with connector (female) and D-sub connector (female), 15-pin, for TNC			310199-xx
Complete with connector (female) and D-sub connector (male), 15-pin, for PWM 20/EIB 741			310196-xx
With one connector (female)			309777-xx
Cable without connectors, Ø 8 mm			816317-xx

Mating element on connecting cable to connector on encoder cable	**Connector (female)** 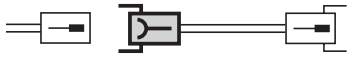	Cable dia. Ø 8 mm	291697-05
Connector on cable for connection to subsequent electronics	**Connector (male)** 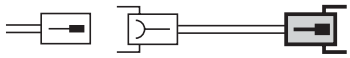	Cable dia. Ø 8 mm Ø 6 mm	291697-08 291697-07
Coupling on connecting cable	**Coupling (male)** 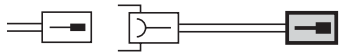	Cable dia. Ø 4.5 mm Ø 6 mm Ø 8 mm	291698-14 291698-03 291698-04
Flange socket for mounting on the subsequent electronics	**Flange socket (female)** 		315892-08

Mounted couplings	**With flange (female)** 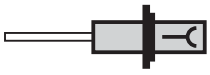	Ø 6 mm Ø 8 mm	291698-17 291698-07
	With flange (male) 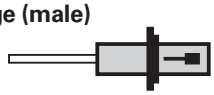	Ø 6 mm Ø 8 mm	291698-08 291698-31
	With central fastener (male) 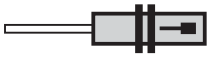	Ø 6 mm to 10 mm	741045-01

Adapter ~ 1 V_{PP}/11 µA_{PP} For converting the 1 V_{PP} signals to 11 µA_{PP}; M23 connector (female, 12-pin) and M23 connector (male, 9-pin)	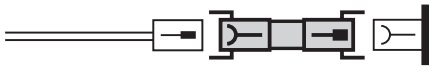	364914-01

A_P: Cross section of power supply lines

EnDat connecting cables

8-pin M12

17-pin M23

PUR connecting cables **8-pin:** [1(4 × 0.14 mm²) + (4 × 0.34 mm²)]; A_V = 0.34 mm² **17-pin:** [(4 × 0.14 mm²) + 4(2 × 0.14 mm²) + (4 x 0.5 mm²)]; A_V = 0.5 mm²		**EnDat** without incremental signals		**EnDat** with **SSI** incremental signals
	Cable diameter	6 mm	3.7 mm	8 mm
Complete with connector (female) and coupling (male)		368330-xx	801142-xx	323897-xx *340302-xx*
Complete with right-angle connector (female) and coupling (male)		373289-xx	801149-xx	–
Complete with connector (female) and D-sub connector (female), 15-pin, for TNC (position inputs)		533627-xx	–	332115-xx
Complete with connector (female) and D-sub connector (female), 25-pin, for TNC (rotational speed inputs)		*641926-xx*	–	*336376-xx*
Complete with connector (female) and D-sub connector (male), 15-pin, for IK 215, PWM 20, EIB 741 etc.		524599-xx	801129-xx	350376-xx
Complete with right-angle connector (female) and D-sub connector (male), 15-pin, for IK 215, PWM 20, EIB 741 etc.		722025-xx	801140-xx	–
With **one connector (female)**		634265-xx	–	309778-xx 309779-xx[1)]
With one right-angle connector, (female)		606317-xx	–	–
Cable only		–	–	816322-xx

Italics: Cable with assignment for "speed encoder" input (MotEnc EnDat)
[1)] Without incremental signals
A_P: Cross section of power supply lines

PUR adapter cable [1(4 × 0.14 mm²) + (4 × 0.34 mm²)]; A_V = 0.34 mm²		**EnDat** without incremental signals
	Cable diameter	6 mm
Complete with 9-pin M23 connector (female) and 8-pin M12 coupling (male)		745796-xx
Complete with 9-pin M23 connector (female) and 25-pin D-sub connector (female) for TNC		745813-xx

A_P: Cross section of power supply lines

Diagnostic and testing equipment

HEIDENHAIN encoders are provided with all information necessary for commissioning, monitoring and diagnostics. The type of available information depends on whether the encoder is incremental or absolute and which interface is used.

Incremental encoders mainly have 1 V_{PP}, TTL or HTL interfaces. TTL and HTL encoders monitor their signal amplitudes internally and generate a simple fault detection signal. With 1 V_{PP} signals, the analysis of output signals is possible only in external test devices or through computation in the subsequent electronics (analog diagnostics interface).

Absolute encoders operate with serial data transfer. Depending on the interface, additional 1 V_{PP} incremental signals can be output. The signals are monitored comprehensively within the encoder. The monitoring result (especially with valuation numbers) can be transferred along with the position value through the serial interface to the subsequent electronics (digital diagnostics interface). The following information is available:

- Error message: Position value not reliable
- Warning: An internal functional limit of the encoder has been reached
- Valuation numbers:
  - Detailed information on the encoder's functional reserve
  - Identical scaling for all HEIDENHAIN encoders
  - Cyclic output is possible

This enables the subsequent electronics to evaluate the current status of the encoder at little cost even in closed-loop mode.

HEIDENHAIN offers the appropriate PWM inspection devices and PWT test devices for encoder analysis. There are two types of diagnostics, depending on how they are integrated:

- Encoder diagnostics: The encoder is connected directly to the test or inspection device. This makes a comprehensive analysis of encoder functions possible.
- Diagnostics in the control loop: The PWM phase meter is looped into the closed control loop (e.g. through a suitable testing adapter). This makes a real-time diagnosis of the machine or system possible during operation. The functions depend on the interface.

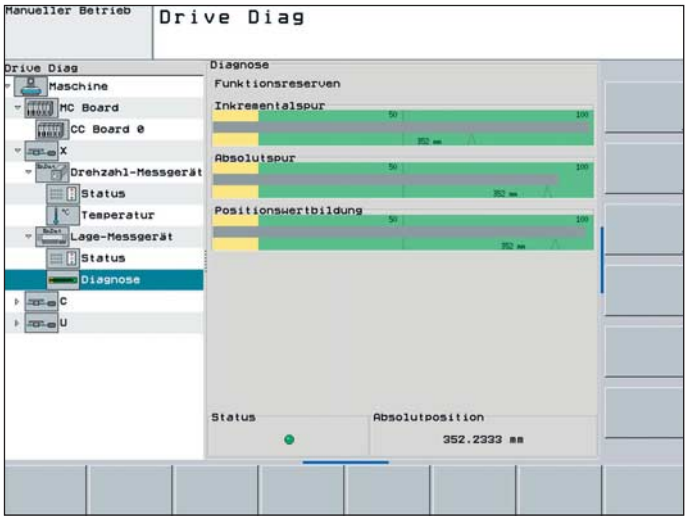

Diagnostics in the control loop on HEIDENHAIN controls with display of the valuation number or the analog encoder signals

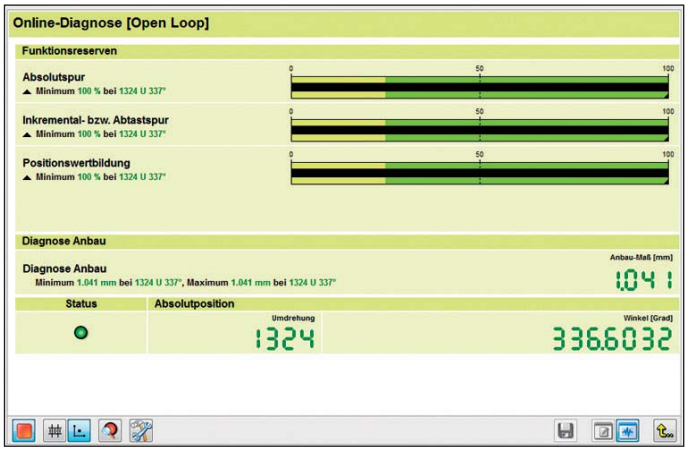

Diagnostics using PWM 20 and ATS software

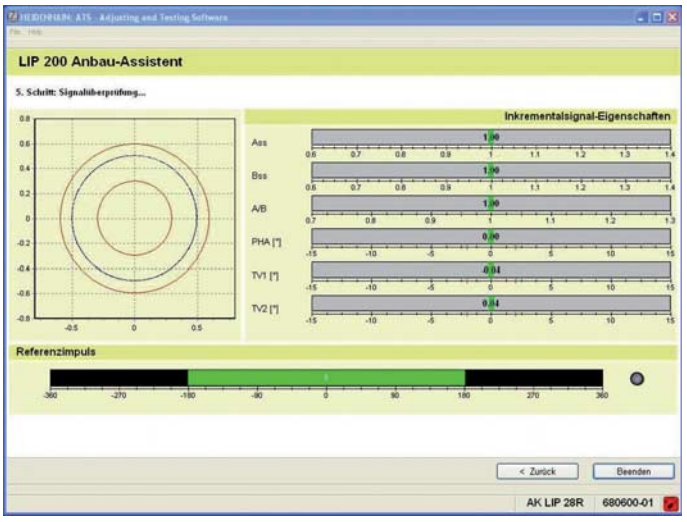

Commissioning using PWM 20 and ATS software

PWM 20
Together with the ATS adjusting and testing software, the PWM 20 phase angle measuring unit serves for diagnosis and adjustment of HEIDENHAIN encoders.



For more information, see the *PWM 20, ATS Software* Product Information sheet.

	PWM 20
Encoder input	• EnDat 2.1 or EnDat 2.2 (absolute value with/without incremental signals) • DRIVE-CLiQ • Fanuc serial interface • Mitsubishi high speed interface • Yaskawa serial interface • SSI • 1 V_{PP}/TTL/11 μA_{PP}
Interface	USB 2.0
Voltage supply	100 V to 240 V AC or 24 V DC
Dimensions	258 mm x 154 mm x 55 mm

	ATS
Languages	Choice between English and German
Functions	• Position display • Connection dialog • Diagnostics • Mounting wizard for EBI/ECI/EQI, LIP 200, LIC 4000 and others • Additional functions (if supported by the encoder) • Memory contents
System requirements and recommendations	PC (dual-core processor, > 2 GHz) RAM > 2 GB Windows operating systems XP, Vista, 7 (32-bit/64-bit), 8 200 MB free space on hard disk

DRIVE-CLiQ is a registered trademark of Siemens Aktiengesellschaft

The **PWM 9** is a universal measuring device for checking and adjusting HEIDENHAIN incremental encoders. Expansion modules are available for checking the various types of encoder signals. The values can be read on an LCD monitor. Soft keys provide ease of operation.



	PWM 9
Inputs	Expansion modules (interface boards) for 11 μA_{PP}; 1 V_{PP}; TTL; HTL; EnDat*/SSI*/commutation signals *No display of position values or parameters
Functions	• **Measures** signal amplitudes, current consumption, operating voltage, scanning frequency • **Graphically displays** incremental signals (amplitudes, phase angle and on-off ratio) and the reference-mark signal (width and position) • **Displays symbols** for the reference mark, fault-detection signal, counting direction • **Universal counter,** interpolation selectable from single to 1 024-fold • **Adjustment support** for exposed linear encoders
Outputs	• Inputs are connected through to the subsequent electronics • BNC sockets for connection to an oscilloscope
Power supply	10 V to 30 V DC, max. 15 W
Dimensions	150 mm × 205 mm × 96 mm

Interface electronics

Interface electronics from HEIDENHAIN adapt the encoder signals to the interface of the subsequent electronics. They are used when the subsequent electronics cannot directly process the output signals from HEIDENHAIN encoders, or if additional interpolation of the signals is necessary.

You can find more detailed information in the *Interface Electronics* Product Overview and the respective product information documents.

Input signals of the interface electronics
Interface electronics from HEIDENHAIN can be connected to encoders with sinusoidal signals of 1 V_{PP} (voltage signals) or 11 μA_{PP} (current signals). Encoders with the serial interfaces EnDat or SSI can also be connected to various interface electronics.

Output signals of the interface electronics
Interface electronics with the following interfaces to the subsequent electronics are available:
- TTL square-wave pulse trains
- EnDat 2.2
- DRIVE-CLiQ
- Fanuc serial interface
- Mitsubishi high speed interface
- Yaskawa serial interface
- PCI bus
- Ethernet
- Profibus

Interpolation of the sinusoidal input signals
In addition to being converted, the sinusoidal encoder signals are also interpolated in the interface electronics. This permits finer measuring steps and, as a result, higher control quality and better positioning behavior.

Formation of a position value
Some interface electronics have an integrated counting function. Starting from the last reference point set, an absolute position value is formed when the reference mark is traversed, and is transferred to the subsequent electronics.

Measured value memory
Interface electronics with integrated measured value memory can buffer measured values:
IK 220: Total of 8192 measured values
EIB 74x: Per input typically 250000 measured values

Box design



Bench-top design



Plug design



Version for integration



Top-hat rail design



Outputs		Inputs		Design – degree of protection	Interpolation[1] or subdivision	Model
Interface	Quantity	Interface	Quantity			
⊓⊔TTL	1	~ 1 V_{PP}	1	Box design – IP 65	5/10-fold	**IBV 101**
					20/25/50/100-fold	**IBV 102**
					Without interpolation	**IBV 600**
					25/50/100/200/400-fold	**IBV 660B**
				Plug design – IP 40	5/10/20/25/50/100-fold	**APE 371**
				Version for integration – IP 00	5/10-fold	**IDP 181**
					20/25/50/100-fold	**IDP 182**
		~ 11 μA_{PP}	1	Box design – IP 65	5/10-fold	**EXE 101**
					20/25/50/100-fold	**EXE 102**
					Without/5-fold	**EXE 602E**
					25/50/100/200/400-fold	**EXE 660B**
				Version for integration – IP 00	5-fold	**IDP 101**
⊓⊔TTL/ ~ 1 V_{PP} Adjustable	2	~ 1 V_{PP}	1	Box design – IP 65	2-fold	**IBV 6072**
					5/10-fold	**IBV 6172**
					5/10-fold and 20/25/50/100-fold	**IBV 6272**
EnDat 2.2	1	~ 1 V_{PP}	1	Box design – IP 65	≤ 16384-fold subdivision	**EIB 192**
				Plug design – IP 40	≤ 16384-fold subdivision	**EIB 392**
			2	Box design – IP 65	≤ 16384-fold subdivision	**EIB 1512**
DRIVE-CLiQ	1	EnDat 2.2	1	Box design – IP 65	–	**EIB 2391S**
Fanuc serial interface	1	~ 1 V_{PP}	1	Box design – IP 65	≤ 16384-fold subdivision	**EIB 192F**
				Plug design – IP 40	≤ 16384-fold subdivision	**EIB 392F**
			2	Box design – IP 65	≤ 16384-fold subdivision	**EIB 1592F**
Mitsubishi high speed interface	1	~ 1 V_{PP}	1	Box design – IP 65	≤ 16384-fold subdivision	**EIB 192M**
				Plug design – IP 40	≤ 16384-fold subdivision	**EIB 392M**
			2	Box design – IP 65	≤ 16384-fold subdivision	**EIB 1592M**
Yaskawa serial interface	1	EnDat 2.2[2]	1	Plug design – IP 40	–	**EIB 3391Y**
PCI bus	1	~ 1 V_{PP}; ~ 11 μA_{PP} EnDat 2.1; SSI Adjustable	2	Version for integration – IP 00	≤ 4096-fold subdivision	**IK 220**
Ethernet	1	~ 1 V_{PP} EnDat 2.1; EnDat 2.2 ~ 11 μA_{PP} upon request Adjustable by software	4	Bench-top design – IP 40	≤ 4096-fold subdivision	**EIB 741 EIB 742**
PROFIBUS-DP	1	EnDat 2.1; EnDat 2.2	1	Top-hat rail design	–	**PROFIBUS Gateway**

[1] Switchable

[2] Only LIC 4100, measuring step 5 nm; LIC 2000 in preparation

HEIDENHAIN

DR. JOHANNES HEIDENHAIN GmbH
Dr.-Johannes-Heidenhain-Straße 5
83301 Traunreut, Germany
☏ +49 8669 31-0
FAX +49 8669 5061
E-mail: info@heidenhain.de

www.heidenhain.de

Vollständige und weitere Adressen siehe www.heidenhain.de
For complete and further addresses see www.heidenhain.de

DE **HEIDENHAIN Vertrieb Deutschland**
83301 Traunreut, Deutschland
☏ 08669 31-3132
FAX 08669 32-3132
E-Mail: hd@heidenhain.de

HEIDENHAIN Technisches Büro Nord
12681 Berlin, Deutschland
☏ 030 54705-240

HEIDENHAIN Technisches Büro Mitte
07751 Jena, Deutschland
☏ 03641 4728-250

HEIDENHAIN Technisches Büro West
44379 Dortmund, Deutschland
☏ 0231 618083-0

HEIDENHAIN Technisches Büro Südwest
70771 Leinfelden-Echterdingen, Deutschland
☏ 0711 993395-0

HEIDENHAIN Technisches Büro Südost
83301 Traunreut, Deutschland
☏ 08669 31-1345

AR **NAKASE SRL.**
B1653AOX Villa Ballester, Argentina
www.heidenhain.com.ar

AT **HEIDENHAIN Techn. Büro Österreich**
83301 Traunreut, Germany
www.heidenhain.de

AU **FCR Motion Technology Pty. Ltd**
Laverton North 3026, Australia
E-mail: vicsales@fcrmotion.com

BE **HEIDENHAIN NV/SA**
1760 Roosdaal, Belgium
www.heidenhain.be

BG **ESD Bulgaria Ltd.**
Sofia 1172, Bulgaria
www.esd.bg

BR **DIADUR Indústria e Comércio Ltda.**
04763-070 – São Paulo – SP, Brazil
www.heidenhain.com.br

BY **GERTNER Service GmbH**
220026 Minsk, Belarus
www.heidenhain.by

CA **HEIDENHAIN CORPORATION**
Mississauga, OntarioL5T2N2, Canada
www.heidenhain.com

CH **HEIDENHAIN (SCHWEIZ) AG**
8603 Schwerzenbach, Switzerland
www.heidenhain.ch

CN **DR. JOHANNES HEIDENHAIN (CHINA) Co., Ltd.**
Beijing 101312, China
www.heidenhain.com.cn

CZ **HEIDENHAIN s.r.o.**
102 00 Praha 10, Czech Republic
www.heidenhain.cz

DK **TP TEKNIK A/S**
2670 Greve, Denmark
www.tp-gruppen.dk

ES **FARRESA ELECTRONICA S.A.**
08028 Barcelona, Spain
www.farresa.es

FI **HEIDENHAIN Scandinavia AB**
02770 Espoo, Finland
www.heidenhain.fi

FR **HEIDENHAIN FRANCE sarl**
92310 Sèvres, France
www.heidenhain.fr

GB **HEIDENHAIN (G.B.) Limited**
Burgess Hill RH15 9RD, United Kingdom
www.heidenhain.co.uk

GR **MB Milionis Vassilis**
17341 Athens, Greece
www.heidenhain.gr

HK **HEIDENHAIN LTD**
Kowloon, Hong Kong
E-mail: sales@heidenhain.com.hk

HR Croatia → **SL**

HU **HEIDENHAIN Kereskedelmi Képviselet**
1239 Budapest, Hungary
www.heidenhain.hu

ID **PT Servitama Era Toolsindo**
Jakarta 13930, Indonesia
E-mail: ptset@group.gts.co.id

IL **NEUMO VARGUS MARKETING LTD.**
Tel Aviv 61570, Israel
E-mail: neumo@neumo-vargus.co.il

IN **HEIDENHAIN Optics & Electronics India Private Limited**
Chetpet, Chennai 600 031, India
www.heidenhain.in

IT **HEIDENHAIN ITALIANA S.r.l.**
20128 Milano, Italy
www.heidenhain.it

JP **HEIDENHAIN K.K.**
Tokyo 102-0083, Japan
www.heidenhain.co.jp

KR **HEIDENHAIN Korea LTD.**
Gasan-Dong, Seoul, Korea 153-782
www.heidenhain.co.kr

MX **HEIDENHAIN CORPORATION MEXICO**
20235 Aguascalientes, Ags., Mexico
E-mail: info@heidenhain.com

MY **ISOSERVE SDN. BHD.**
43200 Balakong, Selangor
E-mail: isoserve@po.jaring.my

NL **HEIDENHAIN NEDERLAND B.V.**
6716 BM Ede, Netherlands
www.heidenhain.nl

NO **HEIDENHAIN Scandinavia AB**
7300 Orkanger, Norway
www.heidenhain.no

PH **Machinebanks` Corporation**
Quezon City, Philippines 1113
E-mail: info@machinebanks.com

PL **APS**
02-384 Warszawa, Poland
www.heidenhain.pl

PT **FARRESA ELECTRÓNICA, LDA.**
4470 - 177 Maia, Portugal
www.farresa.pt

RO **HEIDENHAIN Reprezentanţă Romania**
Braşov, 500407, Romania
www.heidenhain.ro

RS Serbia → **BG**

RU **OOO HEIDENHAIN**
125315 Moscow, Russia
www.heidenhain.ru

SE **HEIDENHAIN Scandinavia AB**
12739 Skärholmen, Sweden
www.heidenhain.se

SG **HEIDENHAIN PACIFIC PTE LTD.**
Singapore 408593
www.heidenhain.com.sg

SK **KOPRETINA TN s.r.o.**
91101 Trencin, Slovakia
www.kopretina.sk

SL **NAVO d.o.o.**
2000 Maribor, Slovenia
www.heidenhain.si

TH **HEIDENHAIN (THAILAND) LTD**
Bangkok 10250, Thailand
www.heidenhain.co.th

TR **T&M Mühendislik San. ve Tic. LTD. ŞTİ.**
34728 Ümraniye-Istanbul, Turkey
www.heidenhain.com.tr

TW **HEIDENHAIN Co., Ltd.**
Taichung 40768, Taiwan R.O.C.
www.heidenhain.com.tw

UA **Gertner Service GmbH Büro Kiev**
01133 Kiev, Ukraine
www.heidenhain.ua

US **HEIDENHAIN CORPORATION**
Schaumburg, IL 60173-5337, USA
www.heidenhain.com

VE **Maquinaria Diekmann S.A.**
Caracas, 1040-A, Venezuela
E-mail: purchase@diekmann.com.ve

VN **AMS Co. Ltd**
HCM City, Vietnam
E-mail: davidgoh@amsvn.com

ZA **MAFEMA SALES SERVICES C.C.**
Midrand 1685, South Africa
www.heidenhain.co.za

Zum Abheften hier falzen! / *Fold here for filing!*

208922-2E · 12 · 11/2013 · H · Printed in Germany

Automation and Metrology International, LLC
1-888-354-2525
auto-met.com