LEINE LINDE

INDUSTRIAL 600 SERIES

ABSOLUTE POSITION ENCODERS

Automation and Metrology International, LLC
8808 Tyler Blvd, Mentor, OH 44060

1-888-354-2525 | sales@auto-met.com
Request a quote: auto-met.com

Small but tough

When the need of a small encoder for harsh environments is of importance, the absolute inductive 600 series is the right choice. It is built to meet the requirements in environments where vibrations, moisture, interference, heat and cold are common. Depending on the application the encoder is available with either anodized aluminum or stainless steel enclosure. Moreover, the encoder is equipped with robust bearings, which makes it one of the most robust Ø58 mm encoder on the market and provides a long encoder service life.

Resolution up to a total of 31 bit multiturn

With the 600 series absolute encoder it is possible to get exact positioning since each position within the revolution of the encoder is made up of a unique code, allowing the shaft's exact position to be read directly on start-up. The total resolution for a 31 bit encoder is equivalent to 524 288 unique positions on each individual revolution, multiplied by 4096 distinguishable revolutions.

Stainless steel for increased robustness

As an option, the 600 series has variants that comply to ATEX for usage within the zone 2/22. The inductive 600 series in stainless steel has a high resistance to corrosion and is therefore suitable in demanding environments such as those common within marine and offshore applications or where aggressive liquids are used.

Robustness in its esse

Sustainable

Market leading vibration and shaft load resistance.

Encapsulation

Ingress protection class IP67 for protection against dust and liquids. Verified for use in salt water environments.

Resolution

High singleturn and multiturn resolution versions of the encoder available.

Shaft and flange

- Hollow shaft, either blind or through-going for fixing with a stator coupling. Shaft dimensions: Ø8 mm, Ø10 mm and Ø12 mm for blind hollow shaft, Ø12 mm for through-going hollow shaft.
- Solid shaft, either round or face for fixing with a flange of either synchro or clamping type. Shaft dimensions: Ø6 mm, Ø10 mm and Ø12 mm.

Material

- Anodized aluminium or
- Stainless steel A4, AISI 316L/EN 1.4404

Explosion-protection (optional)

II 3 G Ex ec IIC T4 Gc X
II 3 D Ex tc IIIC T135C Dc X

nce

PROFIBUS®

PROFINET®

CANopen®

DeviceNet™

EtherCAT® Conformance tested

EtherNet/IP™

DRIVE-CLiQ

SSI

EnDat 2.2

Connection

- M23 or M12 connectors
- Cable glands or premounted cable

Note that some features described in this overview may only be available in certain combinations. Please refer to page 10 for more details.

Mechanics

The 600 series features a robust and compact design with connection through cable glands, M12 or M23 connectors. This spread offers an overview of the different mechanical variants available in the 600 series. Other variants can be created according to the code key on page 10.

ISA 608 with synchro flange and pre-mounted cable

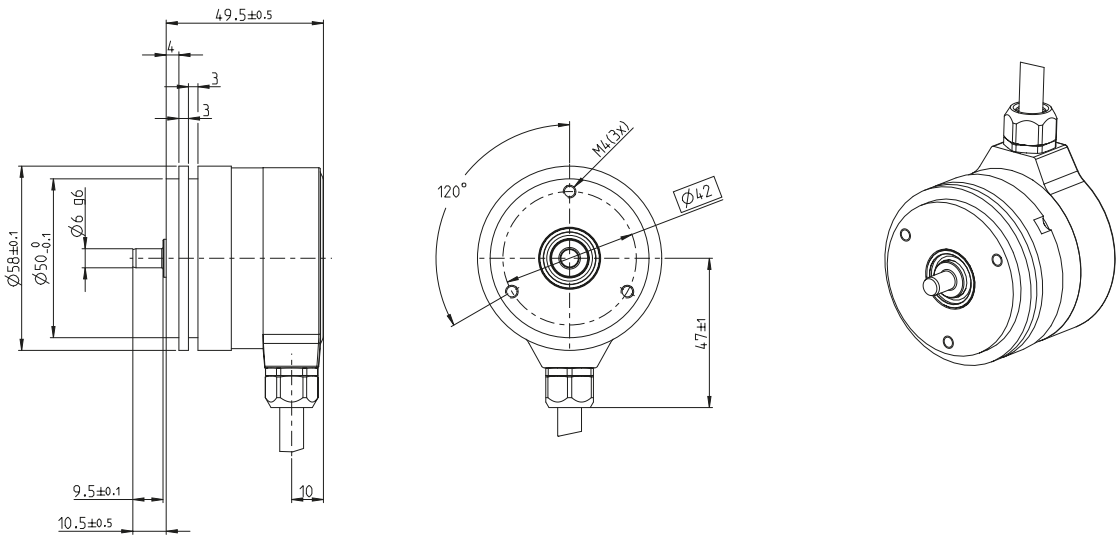

IHA 608 with stator coupling and M23 connector

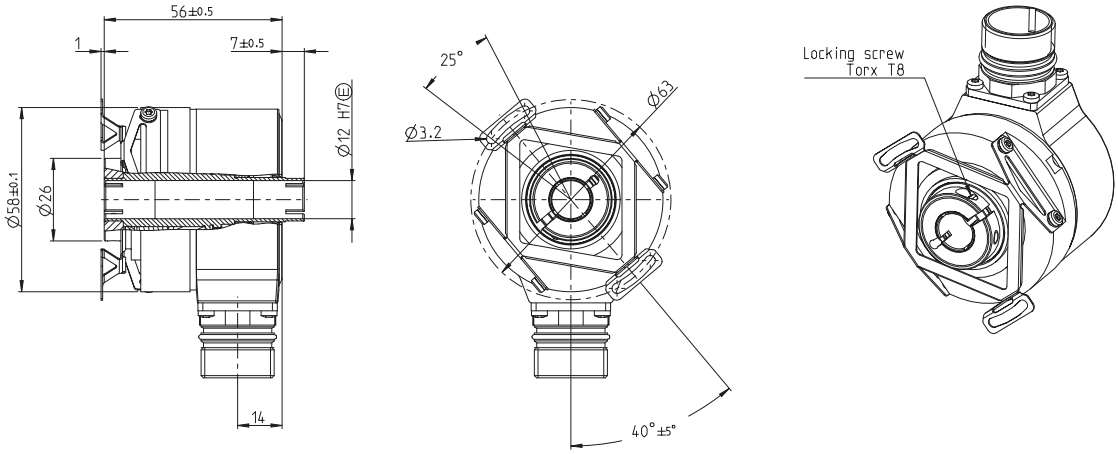

ISA 608 with clamping flange and 1 x M12 connector

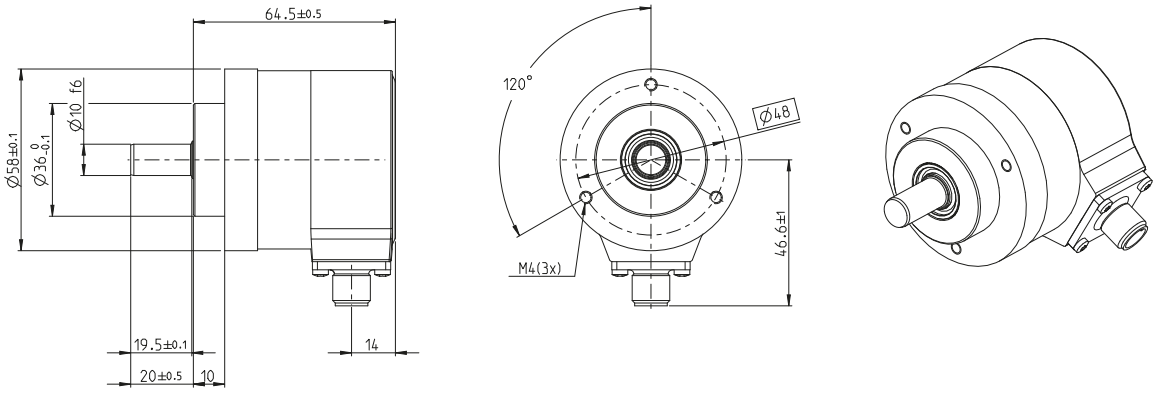

ISA 638 with clamping flange and 3 x M12 connector

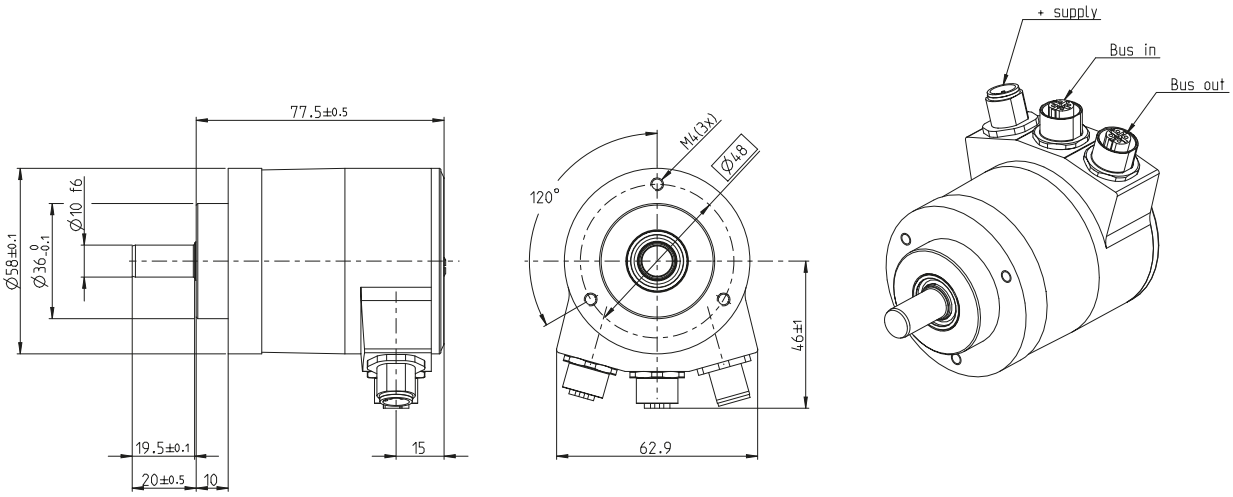

IHA 608 with stator coupling and 3 x cable gland

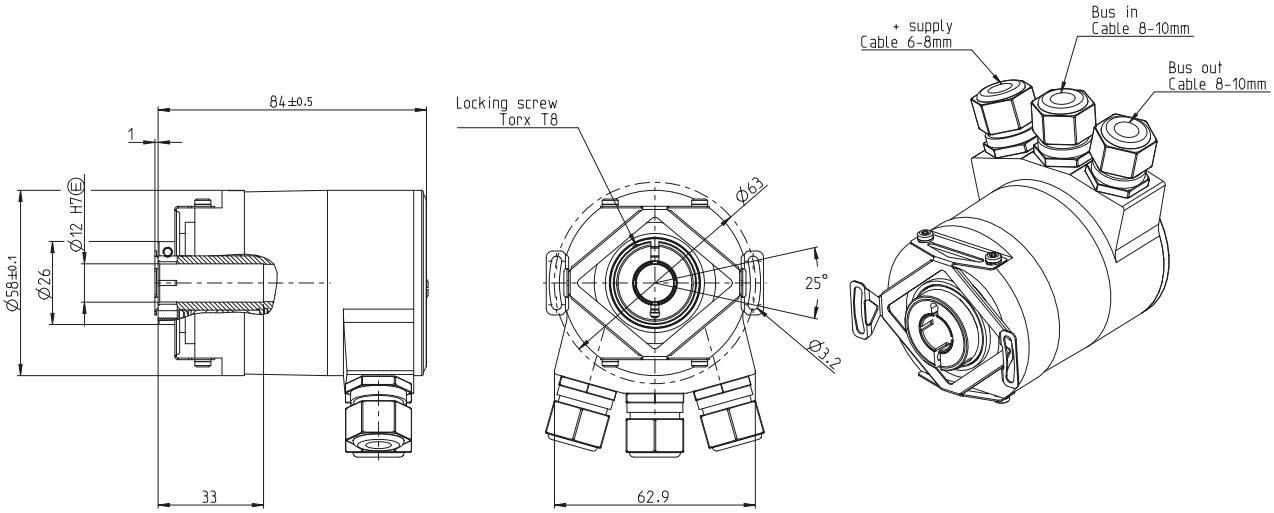

Interfaces

PROFIBUS

The 600 series supports the encoder profiles 3.062 (DVP0) and 3.162 version 4.1 (DVP2) which contains functions such as preset, scaling and code sequence. The encoder profile DVP2 also adds isochronous data exchange and slave-to-slave functions

PROFINET

PROFINET can in general be described as Ethernet-based PROFIBUS DP communication and contains functions such as preset, scaling, code sequence, slave-to-slave and isochronous data exchange.

CANopen

The 600 series CANopen encoder supports encoder profile DS-406 version 3.2 and is certified by the CIA (CAN In Automation) organization. Apart from the standard encoder functionality such as positioning, scaling and presetting commands, the encoder supports speed and acceleration read out as well as PDO mapping and LSS service.

DeviceNet

The 600 series also features support for DeviceNet protocol and the encoder functionality has been tested in compliance with the ODVA conformance test. The DeviceNet encoder supports profile revision 2 with the supported functionalities code sequence, preset, velocity and scaling.

EtherCAT

With no underlying subsystems EtherCAT has a fast Industrial Ethernet technology and is therefore suitable in applications where cycle time down to 31,25 µs is required. The encoder interface supports CANopen over EtherCAT according to CiA 301 and the device profile CiA 406. With objects for position value, speed, and acceleration, the encoder provides a wide usability for fast EtherCAT control systems.

EtherNet/IP

EtherNet/IP is an Industrial Ethernet network that combines standard Ethernet technologies with Common Industrial Protocol, CIP. The EtherNet/IP encoders support the device profile 0x22 with available features such as preset, velocity, speed and acceleration limits, code sequence and scaling.

DRIVE-CLiQ

DRIVE-CLiQ is an Ethernet-based protocol from Siemens. With a speed of 100 Mbit/s and a cycle time of 31.25 µs, DRIVE-CLiQ has the performance required for the most demanding applications. Components with DRIVE-CLiQ are automatically configured with each other since every component has an electronic label. The encoders are supplied with specially adapted connectors, with power supply and data in the same connector.

SSI

Synchronous Serial Interface is a digital point-to-point interface. It provides uni-directional communication at speeds up to 1.0 MHz by the use of only four wires.

EnDat 2.2

The EnDat 2.2 interface is a digital, bidirectional interface for encoders. It is capable of transmitting position values from absolute encoders, as well as reading and updating information stored in the encoder.

Code key

Inductive 600 series

I		A	6							

Shafts

S = Solid shaft
H = Hollow shaft

Material

0 = Anodized aluminium
3 = Stainless steel (A4)
Not available for DRIVE-CLiQ and EtherCAT

Resolution

73 = Singleturn 13 bit
79 = Singleturn 19 bit
85 = Multiturn 25 bit (13 + 12 bit)
81 = Multiturn 31 bit (19 + 12 bit) DRIVE-CLiQ only available with 31 bit

Shaft size

0 = Solid shaft Ø6mm round
1 = Solid shaft Ø6 mm with face
2 = Solid shaft Ø10 mm round
3 = Solid shaft Ø10 mm with face
4 = Blind hollow shaft Ø12 mm
5 = Through-going hollow shaft Ø12 mm (only for SSI, EnDat), only available in aluminium
6 = Solid shaft Ø12 mm with keyway acc. Ti DIN 6885, not available in A4 material
7 = Blind hollow shaft Ø10 mm, only available in aluminium
8 = Blind hollow shaft Ø8 mm, only available for aluminium enclosure, minimum operating temperature -30°C

Flange

6 = Solid shaft with synchro flange
7 = Solid shaft with clamping flange
8 = Hollow shaft

Electronics and connection

Electronics	Connection radial
09 = SSI Binary, with 1 Vpp 32 ppr	M23 connector 17 pin
10 = SSI Binary	Pre-mounted cable 1.5 m
11 = SSI Binary	Pre-mounted cable, specify length xx m
12 = SSI Gray, with 1 Vpp 32 ppr	M23 connector 17 pin
13 = SSI Gray	Pre-mounted cable 1.5 m
14 = SSI Gray	Pre-mounted cable, specify length xx m
15 = EnDat 2.2, with 1 Vpp 32 ppr	M23 connector 17 pin
16 = EnDat 2.2	Pre-mounted cable 1.5 m
17 = EnDat 2.2	Pre-mounted cable, specify length xx m
18 = PROFIBUS	3 x M12 connector
19 = PROFIBUS	3 x Cable gland
20 = PROFINET	3 x M12 connector
21 = CANopen	3 x M12 connector
22 = CANopen	3 x Cable gland
23 = DeviceNet	2 x M12 connector
24 = DeviceNet	2 x Cable gland
25 = DRIVE-CLiQ	1 x M12 connector
26 = EtherCAT	3 x M12 connector
27 = EtherNet/IP	3 x M12 connector

Other options may be available upon request.

Performance

Technical data (based on IHA 608 PROFIBUS)

Operating temperature	-40..+70 °C (+100 °C for SSI and EnDat)
Ingress protection class [IEC 60529]	IP67
Vibration [IEC 60068-2-6]	≤ 300 m/s²
Shock [IEC 60068-2-27]	≤ 2000 m/s²
Cover material	Anodized aluminium
Weight	340 g
Shaft load (axial / radial)	100 N / 140 N
Rotational speed max	12000 rpm
Shaft material	Stainless steel
Power supply	9-36 Vdc
Polarity protected	Yes
Output signal	PROFIBUS DP
Supported profile	Profile 3.062 (DVP0) and 3.162 (DVP2)
Current consumption	95 mA at 24 Vdc
Max. current consumption	150 mA at 24 Vdc

Encoder variants of the 600 series comply with the ATEX directive 2014/34/EU:
EX II 3 G Ex ec IIC T4 Gc X
EX II 3 D Ex tc IIIC T135C Dc X

Accessories

We have a wide range of accessories, from different variants of cables for the right connectivity to couplings suitable for your application.

Gateways
For use in applications where the need of a gateway is necessary for handling signals due to distance, surroundings or other disturbances. For connection with EnDat encoder.

CRG PROFIBUS	Robust DIN-rail-mounted gateway between EnDat and PROFIBUS.
CRG PROFINET	Robust DIN-rail-mounted gateway between EnDat and PROFINET.
CRG CANopen	Robust DIN-rail-mounted gateway between EnDat and CANopen.
CRG DeviceNet	Robust DIN-rail-mounted gateway between EnDat and DeviceNet.
CRG EtherNet/IP	Robust DIN-rail-mounted gateway between EnDat and EtherNet/IP.

For further information regarding our gateways and for our total range of the accessories, please visit our website www.leinelinde.com or contact your nearest Leine Linde office.

Through local presence we support our customers, wherever they are, with a high level of availability and service.

Call us at +46-(0)152 - 265 00.

Other solutions

Encoders with additional 1 Vpp signals, 512 ppr

The optical absolute encoder with additional 1 Vpp has an output of analogue sinus-oidal signals of 512 ppr, which makes it possible to use the encoder in safety-critical applications where detection of extremely small movements is required.

Encoders with additional square wave signals

Leine Linde offers absolute encoders with additional incremental square wave signals, such as HTL and RS422.

Programmable SSI

The SSI programmable 600 series encoder contains the following programmable parameters that can be set via PC software: preset, code sequence, code type, data format and scaling parameters.

For more information about our encoder series please visit our webpage, www.leinelinde.com. Datasheets for our encoders are to be found in the product finder at the webpage or contact your nearest Leine Linde office for further information.

Contact us

SWEDEN / HEAD OFFICE
T +46-(0)152-265 00
F +46-(0)152-265 05
info@leinelinde.com

BRAZIL
T +55-19-3291-8425
F +55-19-3367-5658
info@leinelinde.com.br

FINLAND
T +358-(0)9-561 72 00
F +358-(0)9-561 72 020
info@leinelinde.fi

ITALY
T +39-039-596 01 08
F +39-039-971 22 08
info@leinelinde.it

CHINA
T +86-(021)-525 835 66
F +86-(021)-525 835 99
info@leinelinde.cn

GERMANY
T +49-(0)40-3176758-60
F +49-(0)40-3176758-65
info@leinelinde.de

SOUTH KOREA
T +82-(0)51-746 5420
F +82-(0)51-746 5421
info@leinelinde.co.kr

DENMARK
T +45-862-308 34
info@leinelinde.dk

INDIA
T +91-11-2617 2504
F +91-11-2616 5449
info@leinelinde.in

SPAIN
T +34-93-574 23 02
F +34-93-560 57 60
info@leinelinde.es

Leine Linde's worldwide presence. Read more at www.leinelinde.com

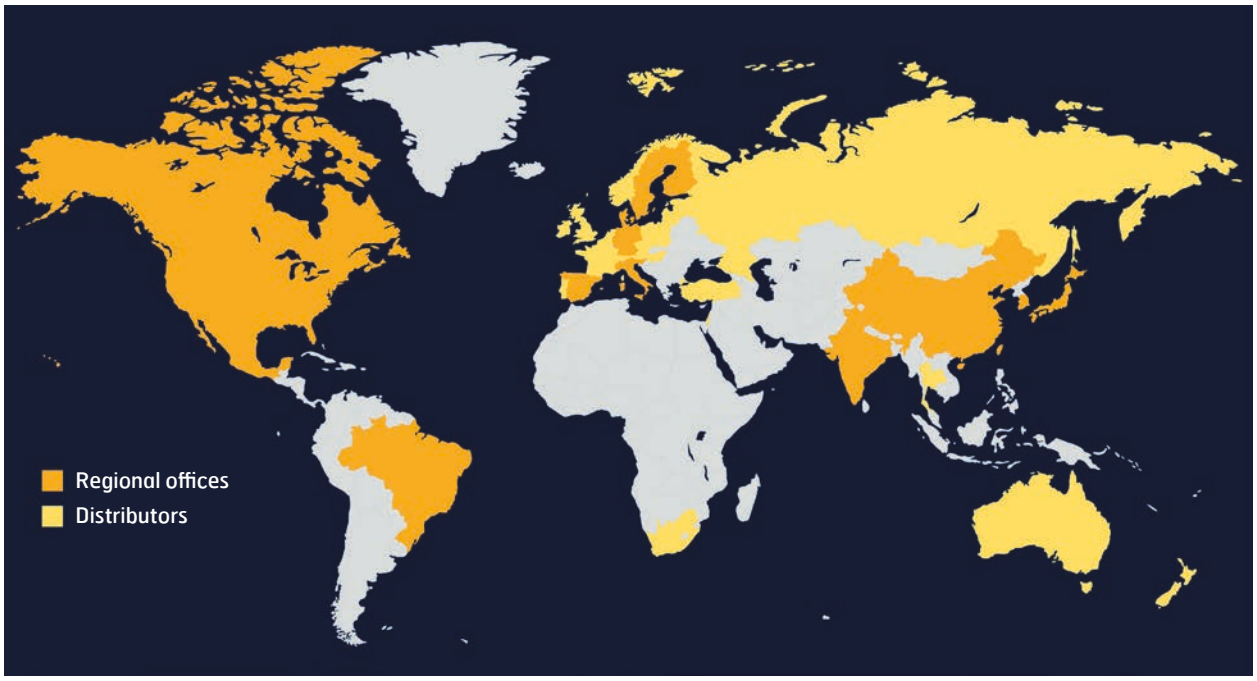

The best encoders are those you never have to think about. Those that simply do their job – year after year. Leine Linde develops and manufactures customised encoder solutions for demanding environments, advanced measuring systems for accurate feedback of speed and position.

LEINE LINDE

+46-(0)152-265 00 www.leinelinde.com

Part no. 1042511-02, ver. 05

Automation and Metrology International, LLC
1-888-354-2525
auto-met.com