# LH70

# Initial Setup Manual

LH70

## INITIAL SETUP FLOW

START → Advance Preparation (Check the conditions of use) → Basic Settings (STEP 1~3) → Detailed Settings (STEP 4~5) → Finished

### Table of contents


| Contents | Page |
|---|---|
| Preparations before making the initial settings (checking conditions of use) | 2 to 3 |
| How to set up **Basic Settings** STEP 1~3 | 4 to 6 |
| How to set up **Detailed Settings** (continued from Basic Settings) STEP 4~5 | 7 |
| Factory Default (All Clear) | 9 |
| Appendix 1: Front panel, Alarm indication | 10 |
| Appendix 2: Adapter connections (scales and gauges) | 11 to 12 |




AMI
Automation and Metrology International, LLC
8808 Tyler Blvd, Mentor, OH 44060
1-888-354-2525 | sales@auto-met.com
Request a quote: auto-met.com

# Preparations before making the initial setting (1/2)

By confirming the conditions of use in advance, the setting operation can be performed easily.
Let's start with the basic settings.

## Basic Setting Items

| Items | Indication (default) | Description | Setting |
|---|---|---|---|
| Type<br>(function selection)<br>TYPE<br>LH70-3 only | GENERAL | The function of LH70-3 (3 axes) can be selected according to the type of machine used.<br>Only GENERAL (general-purpose machine ) can be selected for LH70-1 / 2 (1 axis, 2 axes). | GENERAL: General-purpose machine<br>LATHE: Lathe function |
| Addition display<br>Add<br>Can be selected when "Lathe" (lathe function) is selected | 2 | Selection of addition axis, addition conditions, etc.<br><br>If you select LATHE (lathe function) in the type selection, this item will appear. | 2: No addition, count value of the 2nd axis<br>3: No addition, count value on the 3rd axis<br>2 Add 3: Count value of 2nd axis + 3rd axis<br>2 Add -3: Count value of 2nd axis-3rd axis<br>-2 Add 3: 3rd axis-2nd axis count value<br>-2Add-3: -2nd axis -3rd axis count value |
| Destination country<br>COUNTRY | Std | Please select the region to be used.<br>(Displayable units) | Std: General Area mm, inch<br>US: U.S.A. mm, inch<br>JPN: Japan mm |
| Measuring unit resolution<br>SIGRES | 0.5u | Set the resolution output from the measurement unit to be used for each axis.<br>The resolutions that can be selected are length and angle.<br>Expanded selections increase the number of options. | Length: 0.05 to 100μm<br>*See Tables 1, 2 and 3<br>or<br>Angle: 1 second to 1 degree<br><br>*Angular resolution (1sec to 1 degree) when using a rotary scale |

### Table1: Length scale output resolution

| Measuring Unit | Output resolution | connection cable | Adapter * |
|---|---|---|---|
| SR-1711<br>SR-1711R | 0.5μm | HK-**C<br>HK-**CR | SZ05-T01 |
| SR801/ MSS-101<br>SR801R | 0.5μm | HK-1**C<br>HK-2**C | SZ05-T01 |
| SR801/ MSS-101<br>SR801R | 0.5μm | CE07-**C | SZ51-MS01<br>+ SZ70-1 |
| SR10 / SR30 /<br>SR50<br>SR50-R | 0.5μm | HK-4**C<br>HK6-**CR | SZ05-T01 |
| SR118 | 0.5μm | CE05-**C<br>CH02-** | DZ51<br>+ SZ70-1 |
| SR108<br>SR107 | 0.5μm | | SZ51-MS01<br>+ SZ70-1 |
| SR128 | 0.5μm | CH01-**C | SZ70-1 |
| SR128 / SR127 | 0.5μm | CH01-LW**C | SZ51-MS01<br>+ SZ70-1 |
| SR138R(GB-ER) | 0.5μm | CH04-03C | |

### Table 2: Digiruler output resolution

| Measuring Unit | Output resolution | Adapter/ conversion cable | Adapter * |
|---|---|---|---|
| SL110<br>SL130 | 10μm | PL20B | SZ70-1 |
| SL110<br>SL130 | 10μm | PL20C | |
| SJ300 | 1μm | CH33-**CPD/CED | |
| SJ700 | 5μm | | SZ70-1 |
| SJ700A | 5μm | | |

### Table3: Digital gage output resolution

| Measuring Unit | Output resolution | Adapter/ conversion cable | Adapter * |
|---|---|---|---|
| DG | 0.5μm | | SZ05-T01 |
| DG-B | 0.5μm | DZ-51 | SZ70-1 |
| DL310B/330B | 10μm | DZ-51 | SZ70-1 |
| DK series | 0.1μm or<br>0.5μm | CE29-** | |

* For adapter information, refer to Appendix 2 Adapter Connection in this Manual

# Preparations before making the initial setting (2/2)

Check the usage conditions for Detailed Settings.
(Since the setting conditions can be changed later, use the default values to skip items for which the conditions have not been confirmed)

## Detailed Setting Items

| Items | Indication (default) | Description | Setting |
|---|---|---|---|
| Display resolution and polarity<br>dSP rES | 0.5 u | Sets the resolution to be displayed for each axis. A value lower than the input resolution cannot be set. Selects the value for each axis, including the polarity (+/-).<br>The default value is set by the basic setting. | Length: 0.05 to 100μm<br>or<br>Angle: 1 second to 1 degree |
| Display switching<br>INPUT CHANGE<br> 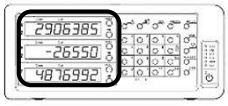 | Upper axis<br>IN - 1<br>Middle axis<br>IN - 2<br>Lower axis<br>IN - 3 | Each display axis can be selected for the length measurement unit input axis. | Input axis:<br>IN-1: 1st input axis<br>IN-2: 2nd input axis<br>IN-3: 3rd input axis<br>IN - -: No display |
| Axis label<br> 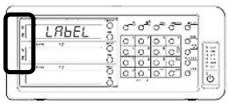 | Upper：X<br>Middle：Y | Display axis label selection<br>**Can be used with LH70-1 and LH70-2.** | Upper axis: "X" or "Z"<br>Middle axis: "Y" or "Z" |
| Compensation value<br>Err SET | Err OFF | Setting of linear compensation | Err OFF：off<br>Lin Err：linear compensation<br>±600μm/m<br>*Expanded selections ±1000μm/m |
| Flicker control<br>FLICKER | 2 | Flickering of the smallest displayed digit can be suppressed. Set the level of flicker suppression. | OFF: Function stop<br>1: Weak<br>2: Strong |
| Sleep<br>SLEEP | OFF | The display turns off when there is no movement of the length measurement unit or key operation for a certain period of time while the power is on.<br>It will return when the length measurement unit is moved or the Key operation is performed again. | OFF: Do not put to sleep<br>1: 1 minute later<br>5: 5 minutes later<br>10:10 minutes later<br>30:30 minutes later<br>60: 60 minutes later |

# How to set up Basic Settings (1/3)

**Step 1** Configure the basic settings.
Choose one of the following methods of operation.

**NOTE:**
If you change the basic settings,
Detailed Settings will be reset to the factory defaults.

## When the power is turned on for the first time after shipment from the factory

Connect the AC adapter and turn the primary power "on".

## When you want to change the basic settings

AC adapter is energized.
Turn on key, the LED light changes from "blinking" to "off" and then press and hold SET UP key for 3 seconds.

The following display appears

Connecting the AC Adapter

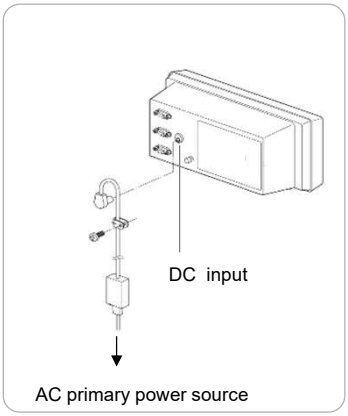


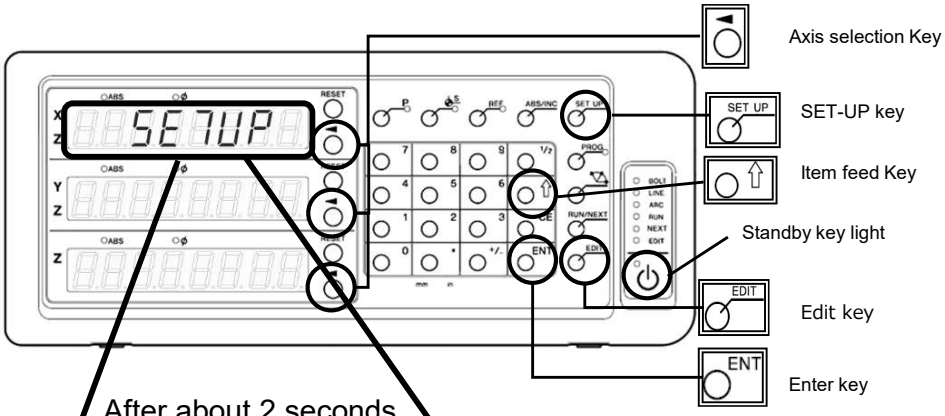


After about 2 seconds

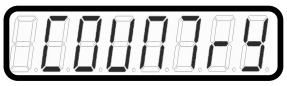


LH70 (1 axis / 2 axes input)

LH70 (3 axes input)

Continued on next page

Pressing key changes the basic setting mode in the order in which it is set.

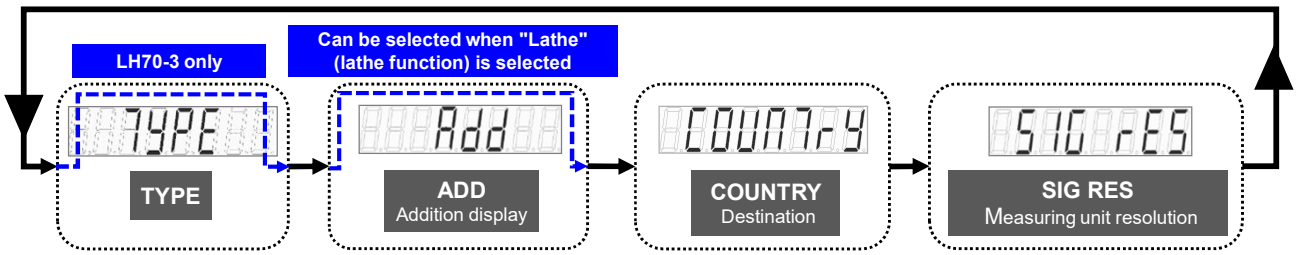


**TYPE:**
Switching of functional specifications between general-purpose machine (GENERAL) and lathe machine (LATHE).

**ADD (additional display):**
Selection of the 2nd and 3rd axes of the length measurement unit input and setting of addition display **(NOTE)**

**COUNTRY (destination country):**
Please select your region

**Signal resolution (Measuring unit resolution):**
Sets the output resolution of the scale to be connected. Supports the input of length and angle display units.

**NOTE: When "Lathe" (lathe function) is selected on the LH70-3 (3-axis input), be sure to connect a scale with high resolution to the length measuring unit input axis 2 to display the addition.**

**COUNTRY (Destination)**

| Symbol | | Destination | Unit |
|---|---|---|---|
| STD | Std | General area | mm, inch |
| US | US | U.S.A. | mm, inch |
| JPN | JPN | Japan | mm |

# How to set up Basic Settings (2/3)

**Step 2** Enter the settings confirmed in "Preparations before making initial settings (1/2)". Repeat steps (1), (2), and (3) to make the basic settings.

(1) Use key to change the basic setting item.

(2) The setting selection can be switched with key on the right side of the counter display.

(3) To define the new value, press ENT key.

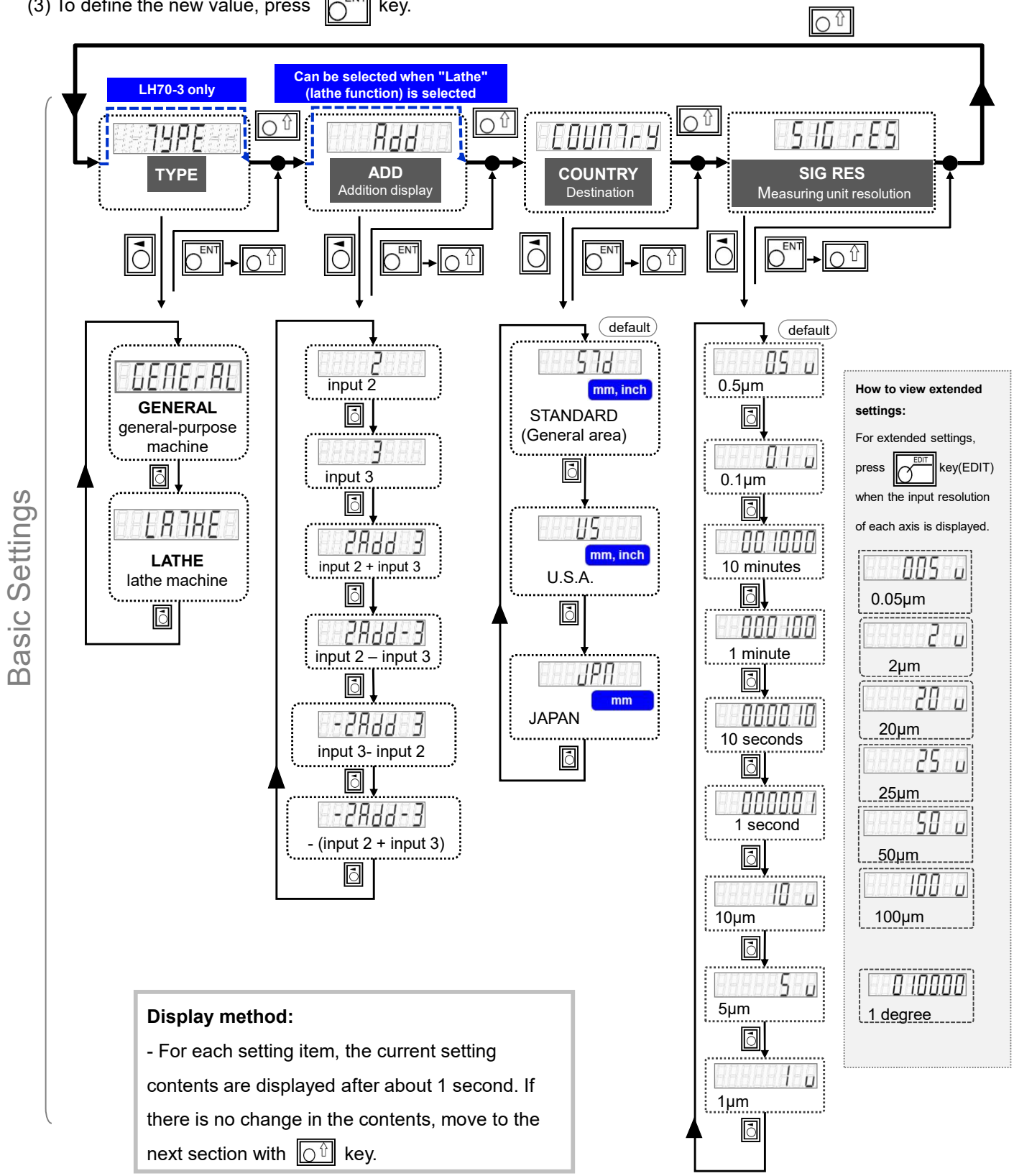


**Display method:**

- For each setting item, the current setting contents are displayed after about 1 second. If there is no change in the contents, move to the next section with key.

# How to set up Basic Settings (3/3)

**Step 3** Once you have completed the basic settings, exit this mode and move to Detailed Setting mode.

How to Exit Basic Setting Mode

① Press RESET key or SET UP key.

② The display changes to CANCEL .

③ Pressing ◄ key displays FINISH .

④ Press ENT key. The display will be dSP rES .

⑤ Press RESET key. The display returns to normal.

This completes the basic settings.

Key to be used at the end of the basic setting mode (LH70)

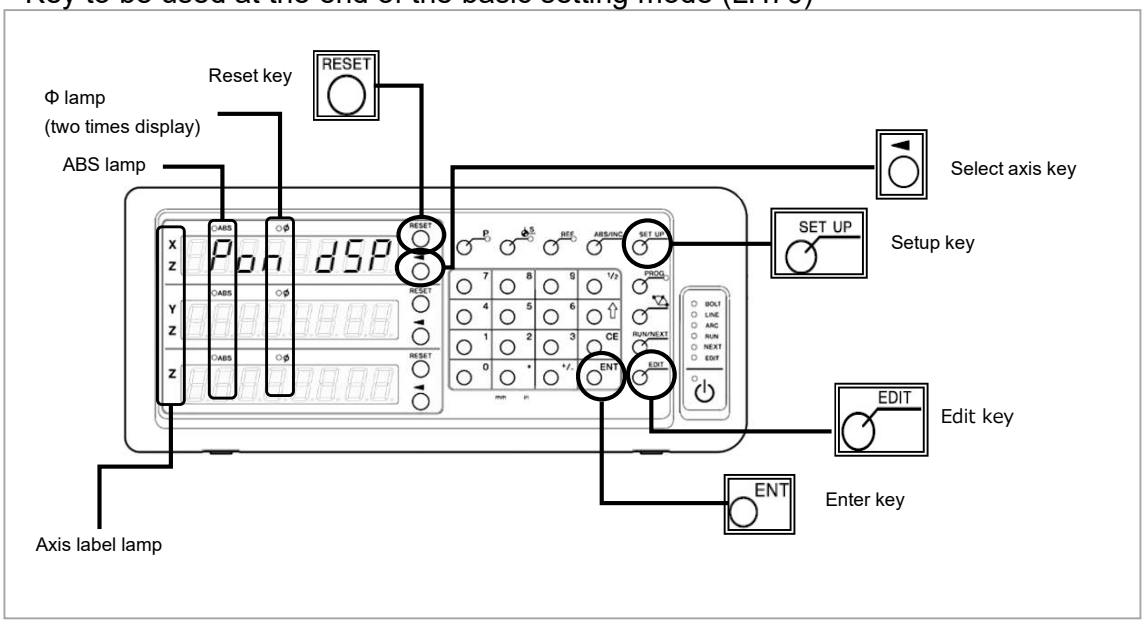

# How to set up Detailed Settings (1/1) (continued from Basic Settings)

## Step 4 Make the detailed settings.

*If you have already completed the basic settings and want to reconfigure only the advanced settings, you can do the same.

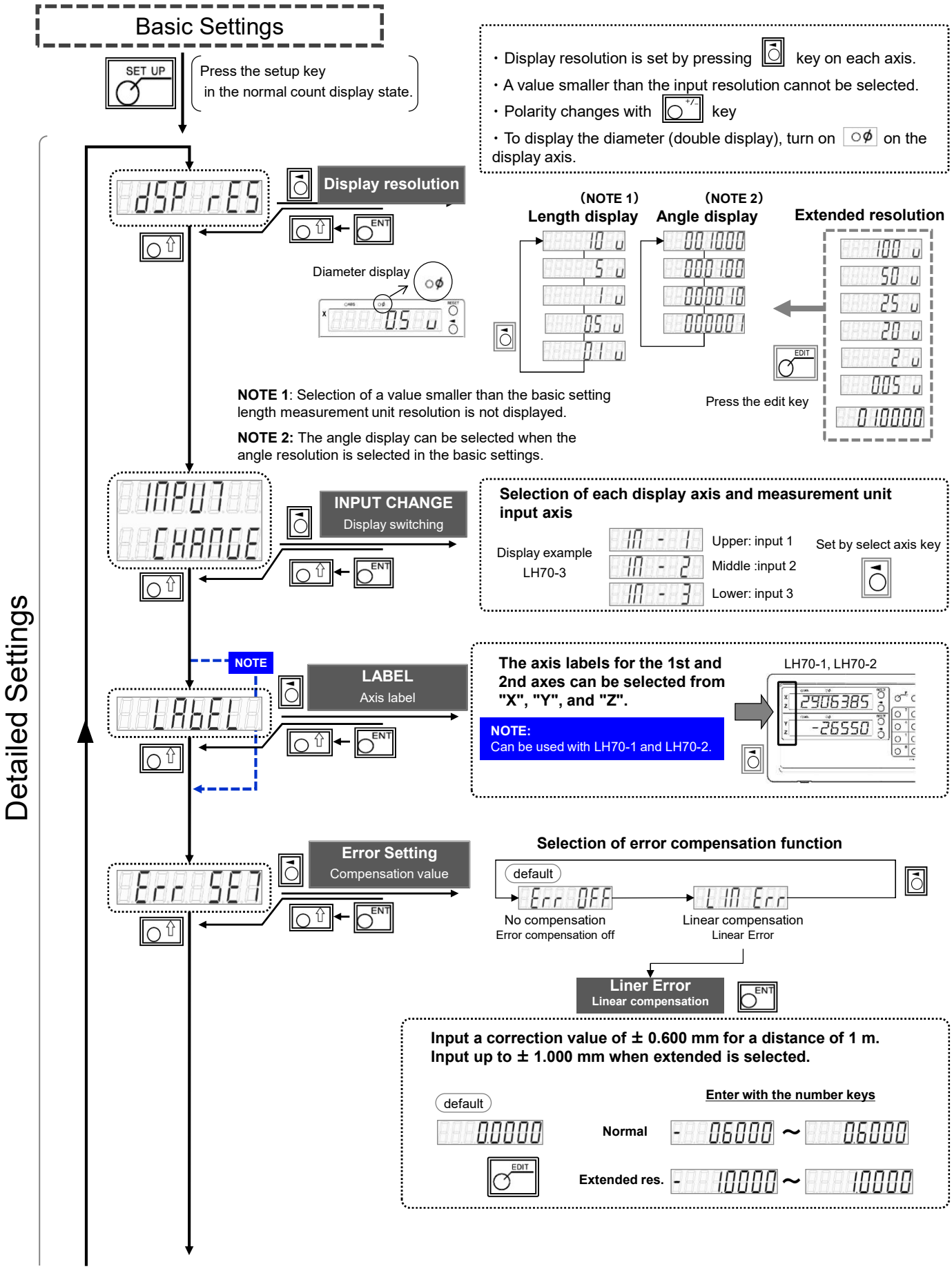

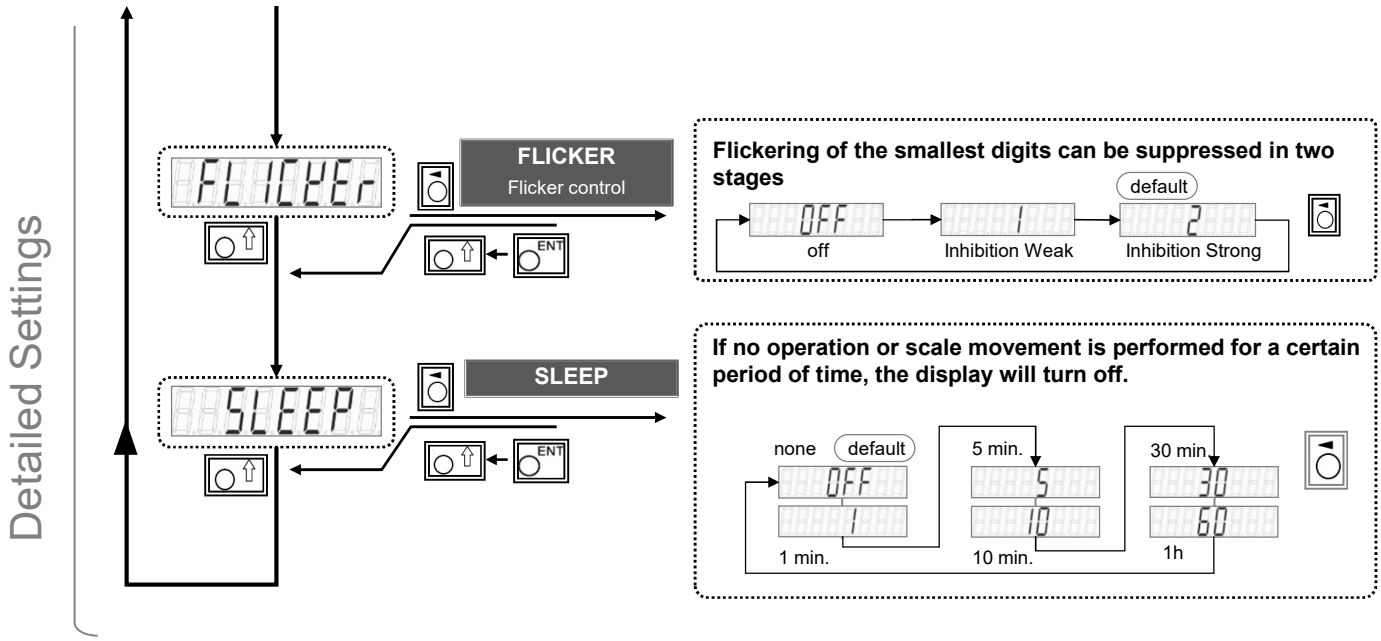


## Step 5

When the Detailed Settings are complete, switch to the normal display.

Press RESET key.

This completes the initial settings..

# Factory Default (All Clear)

To set the factory settings (all clear), perform the following operations.
Make preparation such as taking NOTEs in advance for necessary items.
Also, do not perform any operation other than the explanation.

**CAUTION: IF YOU DO THIS, ALL SETTINGS WILL BE THE FACTORY DEFAULE SETTINGS.**

**Mainly used keys**

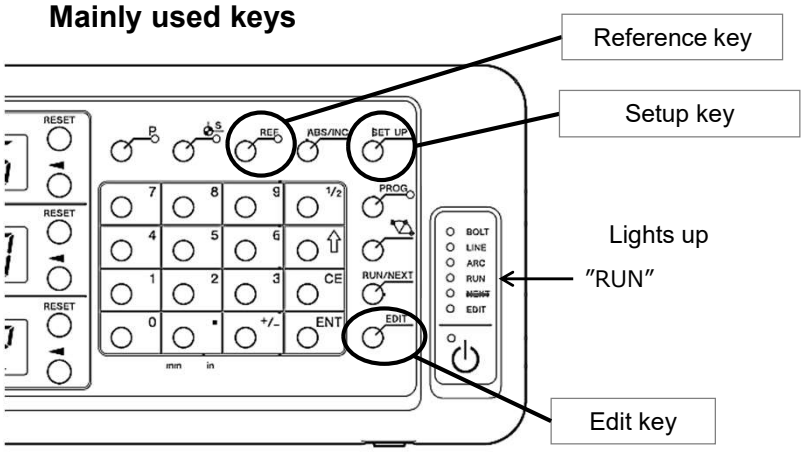


**Connecting the AC Adapter**

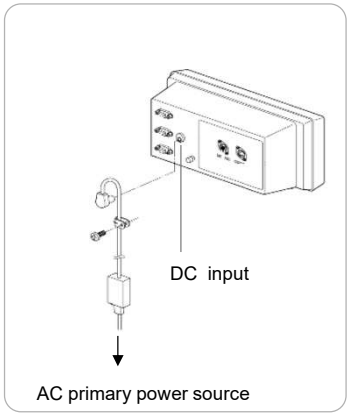


1. Hold down [REF] key and [SET UP] key at the same time to start the power supply.

Connect the AC adapter to the DC-IN input on the back of the counter and turn on the primary power supply.

⇒ The model name of the counter is displayed LH70

2. When you press [REF] key , SLF TST is displayed, followed by TST SEL .

3. Pressing [REF] key changes the display as shown below.

START → n.TST → n.TST → n.TST → n.TST → StrOU → ALL CLr → CLr OU → TST SEL → completion

4. "RUN" LEDs will be lit.

5. Press [EDIT] key to confirm the number of input axis.

In case of LH70-1, INPUT-1 is displayed.
In case of LH70-2, INPUT-2 is displayed.
In case of LH70-3, INPUT-3 is displayed.

6. Turn off the primary power supply of the AC adapter.

**How to check the software version:**

Power ON → Display LH → [Mset] Key → Version
Press any key to return to the LH display.

# Appendix 1

## Front panel

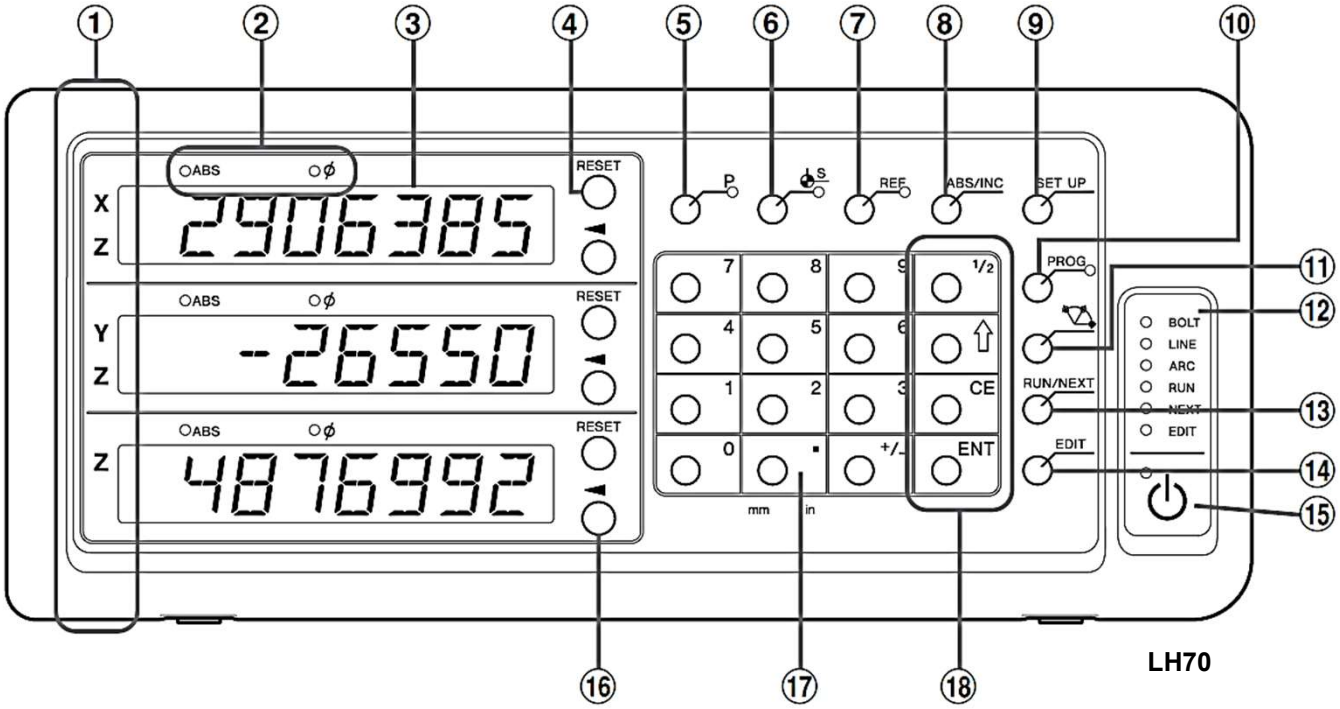


| No. | Name | No. | Name | No. | Name |
|---|---|---|---|---|---|
| ① | Axis label | ⑦ | REF key | ⑬ | RUN/NEXT key |
| ② | ABS lamp, Φ lamp | ⑧ | ABS/INC key | ⑭ | EDIT key |
| ③ | Counter display | ⑨ | SETUP key | ⑮ | Standby key |
| ④ | RESET key | ⑩ | PROG key (not usable) | ⑯ | Axis select key |
| ⑤ | P key | ⑪ | Canned cycle key | ⑰ | Numeric key |
| ⑥ | Datum point value setting key | ⑫ | Status lamp | ⑱ | Function key |

## Alarm indication

| Display | Status | Display | Status |
|---|---|---|---|
| Error | Measurement unit not connected | (Blinking) LH 8 | Storage data error |
| SPd Err | Speed over (NOTE) | rError | Error in reference point detection |
| F000000 | Overflow | | |
| LH | Power failure | | |

NOTE: When using an adapter connection (SZ**), no speed override indication is shown, but rather an error message.

# Appendix 2-1 Adapter connection (Length scale)

| Scale/ Head | Resolution | Adapter | Counter |
|---|---|---|---|
| SR128(GB-A) | 0.5μm | SZ70-1 | LG20<br>LH70/71/71A/72<br>LY71/72 |
| PL20B | 10μm | | |
| SJ700 | 5μm | | |

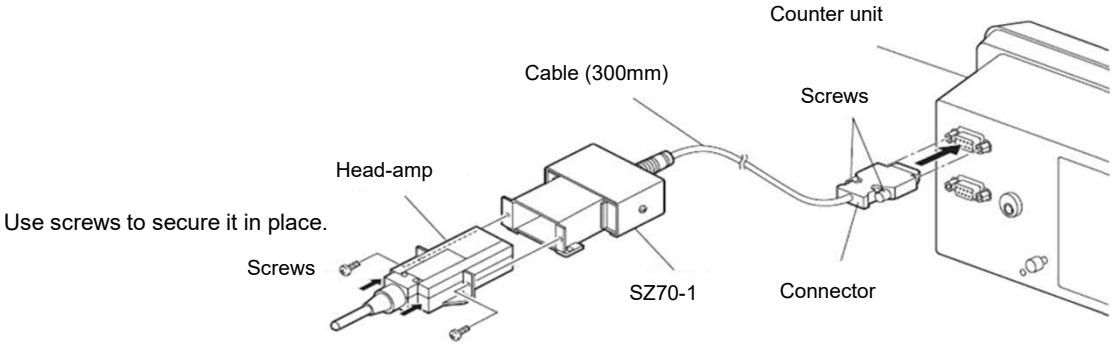


| Scale/ Head | Resolution | Adapter 1 | Adapter 2 | Counter |
|---|---|---|---|---|
| SR108(GB) | 0.5μm | SZ51-MS01 | SZ70-1 | LG20<br>LH70/71/71A/72<br>LY71/72 |
| PL20A | 10μm | SZ51-DR01 | | |

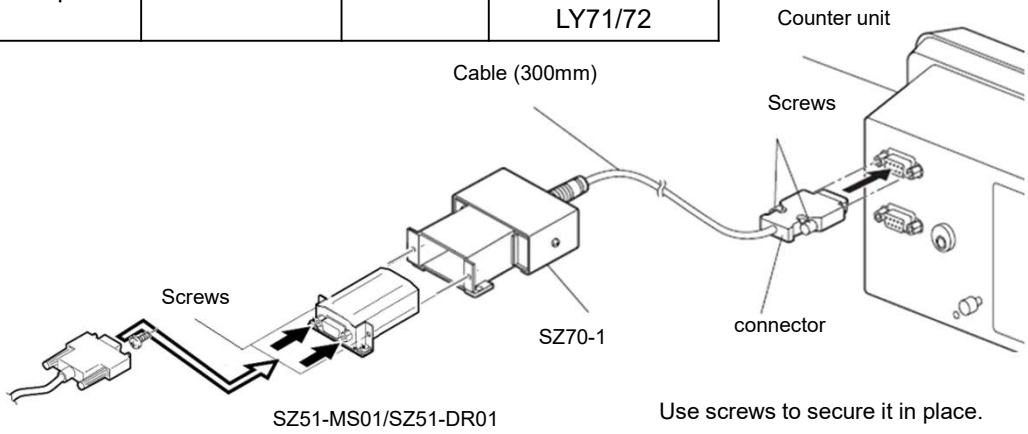


| Scale | Resolution | Adapter | Counter |
|---|---|---|---|
| SR-1711(GP)、SR10A/741(GS)、SR50A(GF,GF-R)、SR30A(GM)、SR801/801R(GL) | 0.5μm | SZ05-T01 | LG20<br>LH70/71/71A/72<br>LY71/72 |

* HA13A, 15A, 23A and 25A are used as head amps

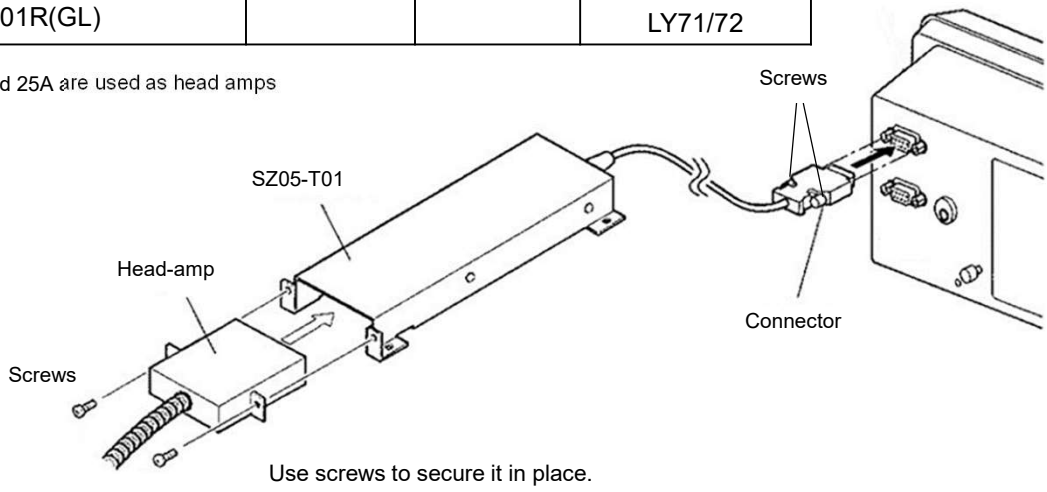

# Appendix 2-2 Adapter connection (Digital gauge)

| Gauge | Resolution | Connection cable | Counter |
|---|---|---|---|
| DK-** | 0.1μm<br>or<br>0.5μm | CE29-**<br>**: 003/01/03/05/10<br>(0.3 to 10m) | LG20<br>LH70/71/71A/72<br>LY71/72 |

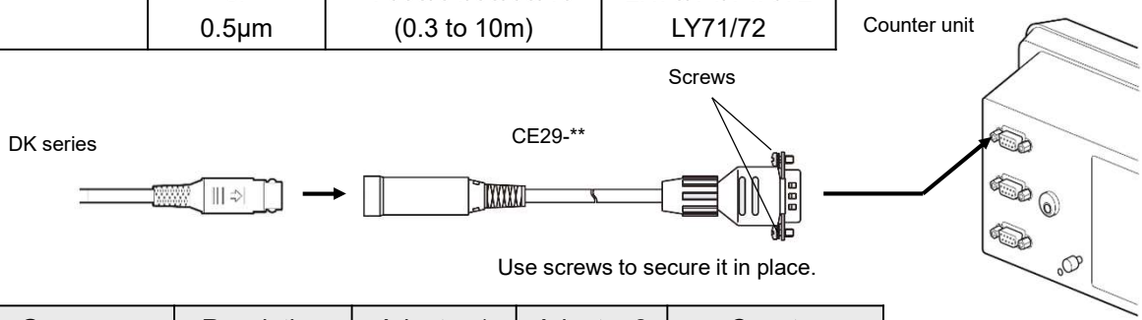


| Gauge | Resolution | Adapter 1 | Adapter 2 | Counter |
|---|---|---|---|---|
| DG-B | 0.5μm | DZ51 | SZ70-1 | LG20<br>LH70/71/71A/72<br>LY71/72 |
| DL310B/330B | 10μm | | | |

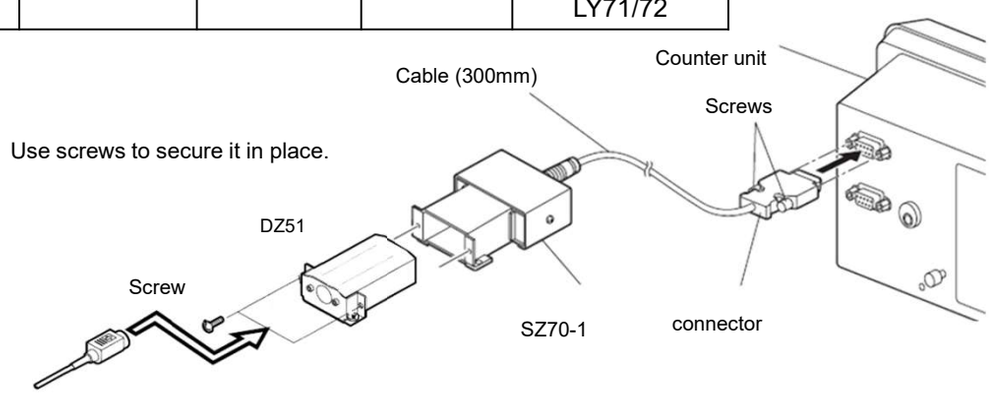


| Gauge | Resolution | Adapter | Counter |
|---|---|---|---|
| DG | 0.5μm | SZ05－T01 | LG20<br>LH70/71/71A/72<br>LY71/72 |

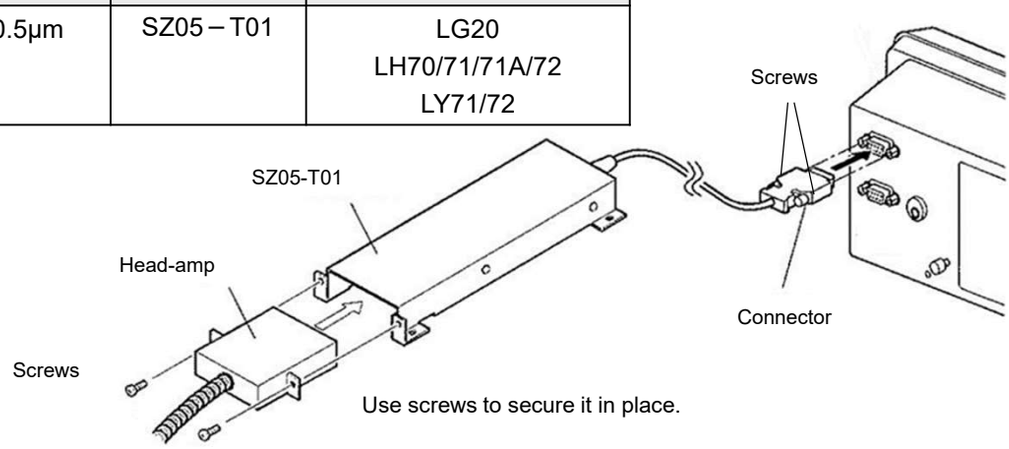


| Gauge | Resolution | Adapter | Counter |
|---|---|---|---|
| DE12BR/30BR | 0.1μm | SZ70-1 | LG20<br>LH70/71/71A/72<br>LY71/72 |

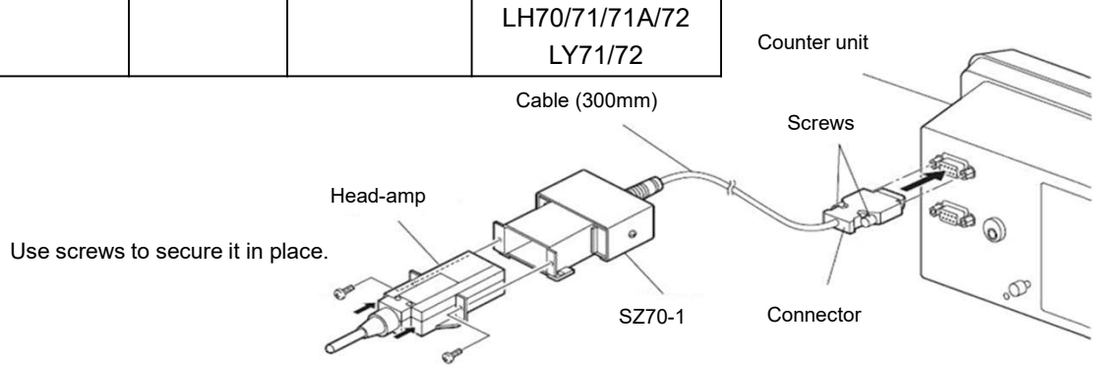




Automation and Metrology International, LLC
1-888-354-2525
auto-met.com