LH71

Initial Setup Manual

LH71

INITIAL SETUP FLOW

Table of contents

Contents	Page
Preparations before making the initial settings (checking conditions of use)	2 to 3
How to set up **Basic Settings** STEP 1~3	4 to 6
How to set up **Detailed Settings** (continued from Basic Settings) STEP 4~5	7
Factory Default (All Clear)	9
Appendix 1: Front panel, Alarm indication	10
Appendix 2: Adapter connections (scales and gauges)	11 to 12

AMI
Automation and Metrology International, LLC
8808 Tyler Blvd, Mentor, OH 44060
1-888-354-2525 | sales@auto-met.com
Request a quote: auto-met.com

Preparations before making the initial setting (1/2)

By confirming the conditions of use in advance, the setting operation can be performed easily.
Let's start with the basic settings.

Basic Setting Items

Items	Indication (default)	Description	Setting
Type (function selection) TYPE LH71-3 only	GENERAL	The function of LH71-3 (3 axes) can be selected according to the type of machine used. Only GENERAL (general-purpose machine) can be selected for LH71-1 / 2 (1 axis, 2 axes).	GENERAL: General-purpose machine LATHE: Lathe function
Addition display Add Can be selected when "Lathe" (lathe function) is selected	2	Selection of addition axis, addition conditions, etc. If you select LATHE (lathe function) in the type selection, this item will appear.	2: No addition, count value of the 2nd axis 3: No addition, count value on the 3rd axis 2 Add 3: Count value of 2nd axis + 3rd axis 2 Add -3: Count value of 2nd axis-3rd axis -2 Add 3: 3rd axis-2nd axis count value -2Add-3: -2nd axis -3rd axis count value
Destination country COUNTRY	Std	Please select the region to be used. (Displayable units)	Std: General Area mm, inch US: U.S.A. mm, inch JPN: Japan mm
Measuring unit resolution SIGRES	0.5 u	Set the resolution output from the measurement unit to be used for each axis. The resolutions that can be selected are length and angle. Expanded selections increase the number of options.	Length: 0.05 to 100μm *See Tables 1, 2 and 3 or Angle: 1 second to 1 degree *Angular resolution (1sec to 1 degree) when using a rotary scale

Table1: Length scale output resolution

Measuring Unit	Output resolution	connection cable	Adapter *
SR-1711 SR-1711R	0.5μm	HK-**C HK-**CR	SZ05-T01
SR801/ MSS-101 SR801R	0.5μm	HK-1**C HK-2**C	SZ05-T01
SR801/ MSS-101 SR801R	0.5μm	CE07-**C	SZ51-MS01 + SZ70-1
SR10 / SR30 / SR50 SR50-R	0.5μm	HK-4**C HK6-**CR	SZ05-T01
SR118	0.5μm	CE05-**C CH02-**	DZ51 + SZ70-1
SR108 SR107	0.5μm		SZ51-MS01 + SZ70-1
SR128	0.5μm	CH01-**C	SZ70-1
SR128 / SR127	0.5μm	CH01-LW**C	SZ51-MS01 + SZ70-1
SR138R(GB-ER)	0.5μm	CH04-03C	

Table 2: Digiruler output resolution

Measuring Unit	Output resolution	Adapter/ conversion cable	Adapter *
SL110 SL130	10μm	PL20B	SZ70-1
SL110 SL130	10μm	PL20C	
SJ300	1μm	CH33-**CPD/CED	
SJ700	5μm		SZ70-1
SJ700A	5μm		

Table3: Digital gage output resolution

Measuring Unit	Output resolution	Adapter/ conversion cable	Adapter *
DG	0.5μm		SZ05-T01
DG-B	0.5μm	DZ-51	SZ70-1
DL310B/330B	10μm	DZ-51	SZ70-1
DK series	0.1μm or 0.5μm	CE29-**	

* For adapter information, refer to Appendix 2 Adapter Connection in this Manual

Preparations before making the initial setting (2/2)

Check the usage conditions for Detailed Settings.
(Since the setting conditions can be changed later, use the default values to skip items for which the conditions have not been confirmed)

Detailed Settings Items

Items	Indication (default)	Description	Setting
Display resolution and polarity dSP rES	0.5 u	Sets the resolution to be displayed for each axis. A value lower than the input resolution cannot be set. Selects the value for each axis, including the polarity (+/-). The default value is set by the basic setting.	Length: 0.05 to 100μm or Angle: 1 second to 1 degree
Display switching INPUT CHANGE 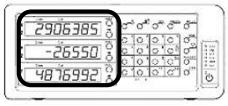	Upper axis IN - 1 Middle axis IN - 2 Lower axis IN - 3	Each display axis can be selected for the length measurement unit input axis.	Input axis: IN-1: 1st input axis IN-2: 2nd input axis IN-3: 3rd input axis IN - -: No display
Axis label 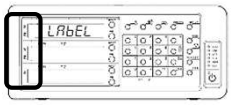	Upper：X Middle：Y	Display axis label selection *** Can be used with LH71-1 and LH71-2.**	Upper axis: "X" or "Z" Middle axis: "Y" or "Z"
Scaling SCALING	1.000000	Displayed by multiplying the measured value by the magnification	0.1 times to about 10 times
Compensation value Err SET	Err OFF	Setting of linear compensation and segmented error compensation	Err OFF：off Lin Err：linear compensation ±600μm/m *Expanded selections ±1000μm/m SEG Err：segmented error compensation
Flicker control FLICKER	2	Flickering of the smallest displayed digit can be suppressed. Set the level of flicker suppression.	OFF: Function stop 1: Weak 2: Strong
Sleep SLEEP	OFF	The display turns off when there is no movement of the length measurement unit or key operation for a certain period of time while the power is on. It will return when the length measurement unit is moved or the Key operation is performed again.	OFF: Do not put to sleep 1: 1 minute later 5: 5 minutes later 10:10 minutes later 30:30 minutes later 60: 60 minutes later

How to set up Basic Settings (1/3)

Step 1 Configure the basic settings.
Choose one of the following methods of operation.

NOTE:
If you change the basic settings,
Detailed Settings will be reset to the factory defaults.

When the power is turned on for the first time after shipment from the factory

Connect the AC adapter and turn the primary power "on".

When you want to change the basic settings

AC adapter is energized.
Turn on key, the LED light changes from "blinking" to "off" and then press and hold SET UP key for 3 seconds.

The following display appears

Connecting the AC Adapter

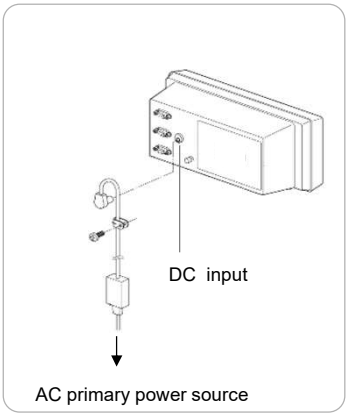

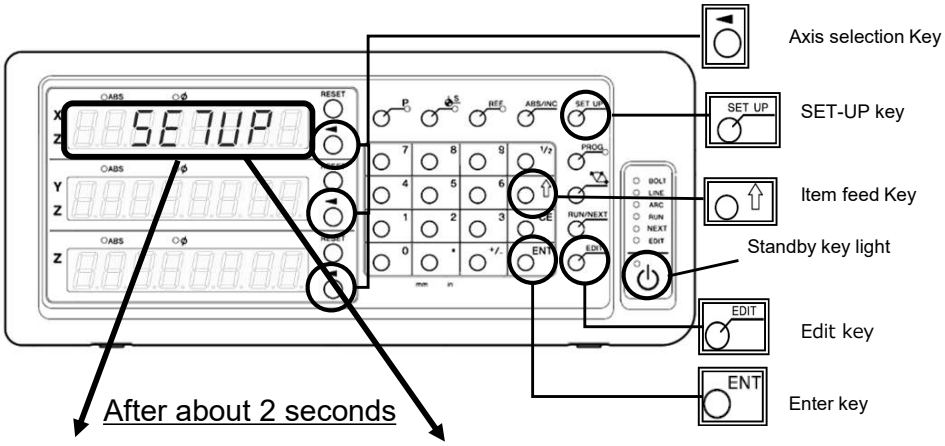

After about 2 seconds

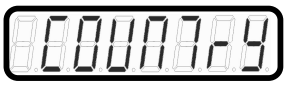

LH71 (1 axis / 2 axes input)

LH71 (3 axes input)

Continued on next page

Pressing key changes the basic setting mode in the order in which it is set.

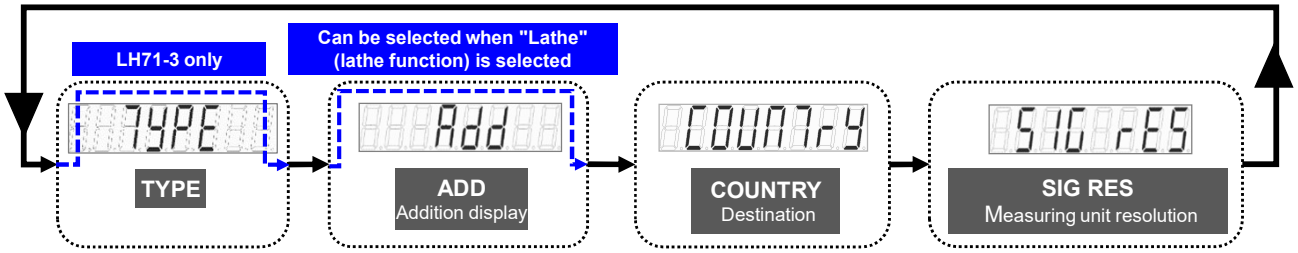

TYPE:
Switching of functional specifications between general-purpose machine (GENERAL) and lathe machine (LATHE).

ADD (additional display):
Selection of the 2nd and 3rd axes of the length measurement unit input and setting of addition display **(NOTE)**

COUNTRY (destination country):
Please select your region

Signal resolution (measuring unit resolution):
Sets the output resolution of the scale to be connected. Supports the input of length and angle display units.

NOTE: When "Lathe" (lathe function) is selected on the LH71-3 (3-axis input), be sure to connect a scale with high resolution to the length measuring unit input axis 2 to display the addition.

COUNTRY (Destination)

Symbol		Destination	Unit
STD	Std	General area	mm, inch
US	US	U.S.A.	mm, inch
JPN	JPN	Japan	mm

How to set up Basic Settings (2/3)

Step 2 Enter the settings confirmed in "Preparations before making initial settings (1/2)". Repeat steps (1), (2), and (3) to make the basic settings.

(1) Use key to change the basic setting item.

(2) The setting selection can be switched with key on the right side of the counter display.

(3) To define the new value, press ENT key.

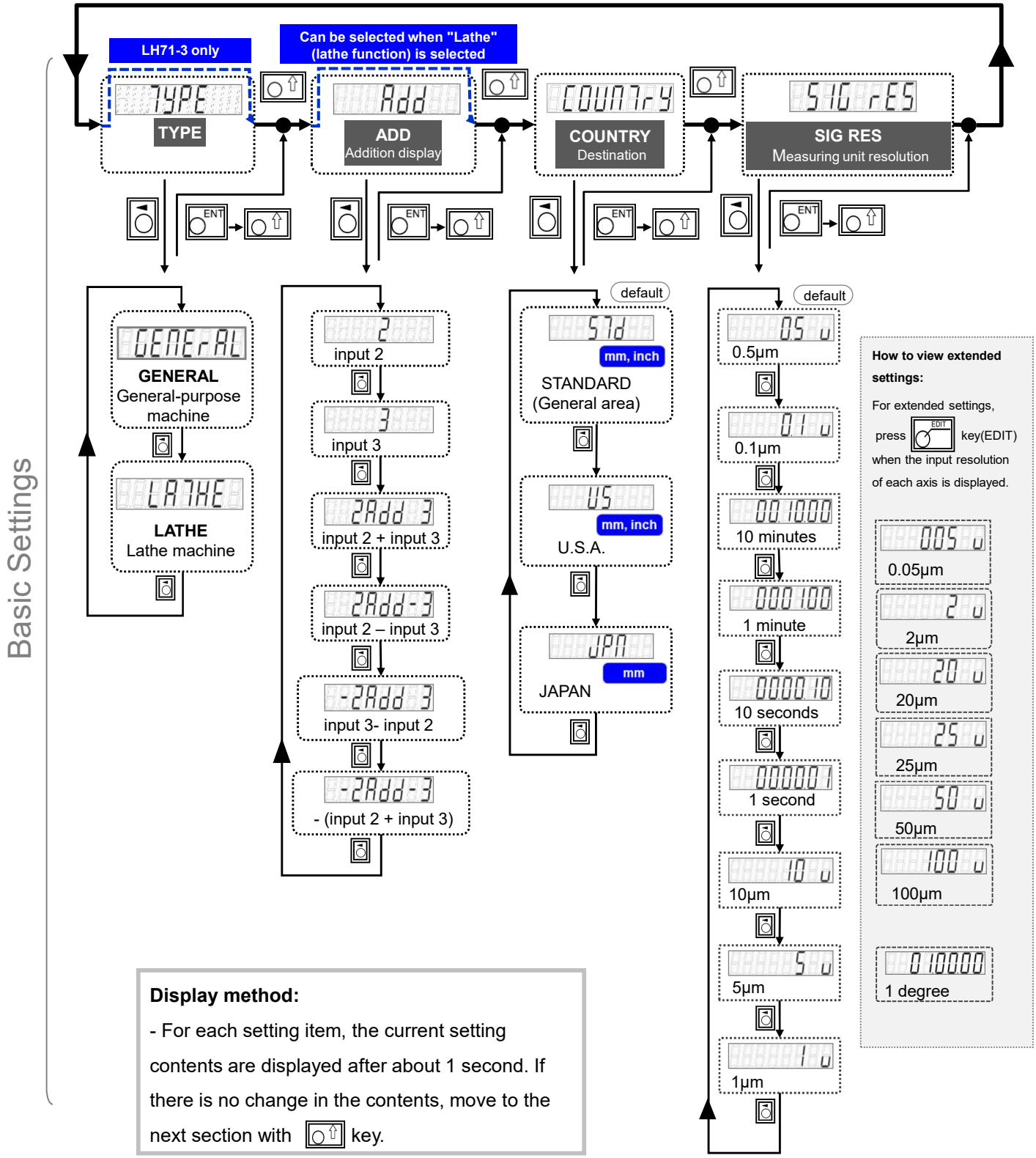

Display method:

- For each setting item, the current setting contents are displayed after about 1 second. If there is no change in the contents, move to the next section with key.

How to set up Basic Settings (3/3)

Step 3 Once you have completed the basic settings, exit this mode and move to Detailed Setting mode.

How to Exit Basic Setting Mode

① Press RESET key or SET UP key.

② The display changes to CANCEL .

③ Pressing ◄ key displays FINISH .

④ Press ENT key. The display will be dSP rES .

⑤ Press RESET key. The display returns to normal.

This completes the basic settings.

Key to be used at the end of the basic setting mode (LH71)

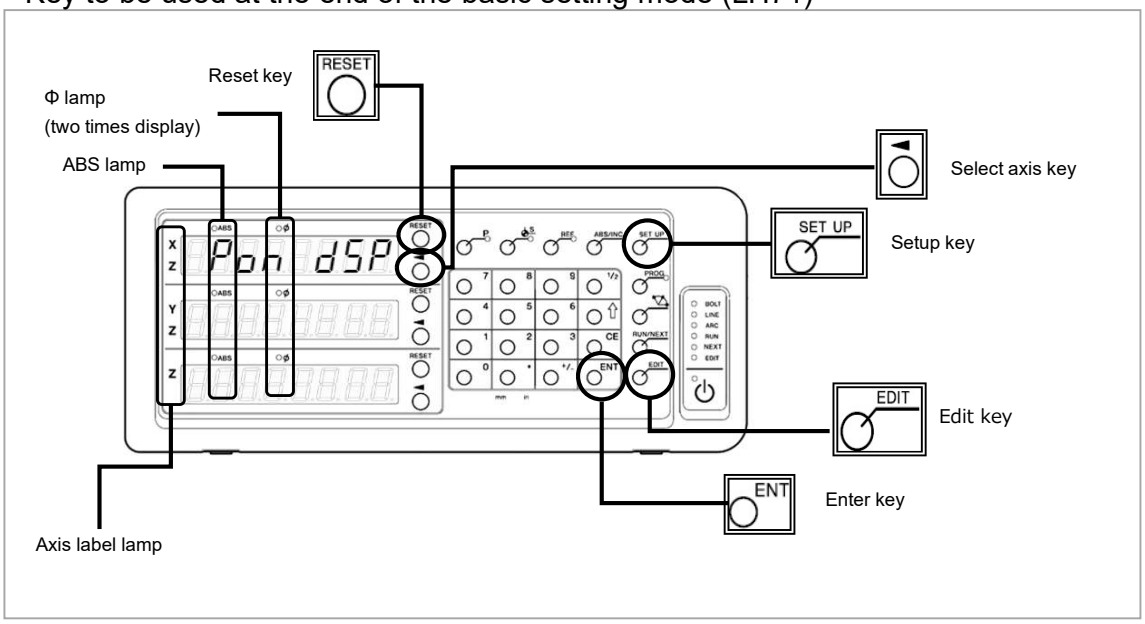

How to set up Detailed Settings (1/1) (continued from Basic Settings)

Step 4 Make the detailed settings.

*If you have already completed the basic settings and want to reconfigure only the advanced settings, you can do the same.

Detailed Settings

Basic Settings

SET UP — Press the setup key in the normal count display state.

- Display resolution is set by pressing key on each axis.
- A value smaller than the input resolution cannot be selected.
- Polarity changes with key
- To display the diameter (double display), turn on on the display axis.

Display resolution

Diameter display

Length display (NOTE 1) — Angle display (NOTE 2) — Extended resolution

Press the edit key

NOTE 1: Selection of a value smaller than the basic setting length measurement unit resolution is not displayed.

NOTE 2: The angle display can be selected when the angle resolution is selected in the basic settings.

INPUT CHANGE
Display switching

Selection of each display axis and measurement unit input axis

Display example LH71-3

Upper: input 1
Middle :input 2
Lower: input 3

Set by select axis key

NOTE

LABEL
Axis label switching

The axis labels for the 1st and 2nd axes can be selected from "X", "Y", and "Z".

NOTE:
Can be used with LH71-1 and LH71-2.

LH71-1, LH71-2

SCALING

Scaling magnification input

default

0.100000 ≤ magnification ≤ 9.999999

Error Setting
Compensation value

Selection of error compensation function

default

No compensation
Error compensation off

Linear compensation
Linear Error

Segmented error compensation
Segmentation Error

Liner Error
Linear compensation

Input a correction value of ± 0.600 mm for a distance of 1 m. Input up to ± 1.000 mm when extended is selected.

0.0000 default

Enter with the number keys

Normal: -0.6000 ~ 0.6000

Extended res.: -1.0000 ~ 1.0000

Segmentation Error
Segmented error compensation

For the operation method, refer to the instruction manual or the simple manual (Segmented error compensation).
Segmented error compensation function uses a scale with reference point to correct mechanical errors for each interval.
The range that can be corrected is the range of the counter display based on the reference point position.
In order to use this function, it is necessary to measure the section error of the machine with a laser interferometer, length reference device, etc. in advance.

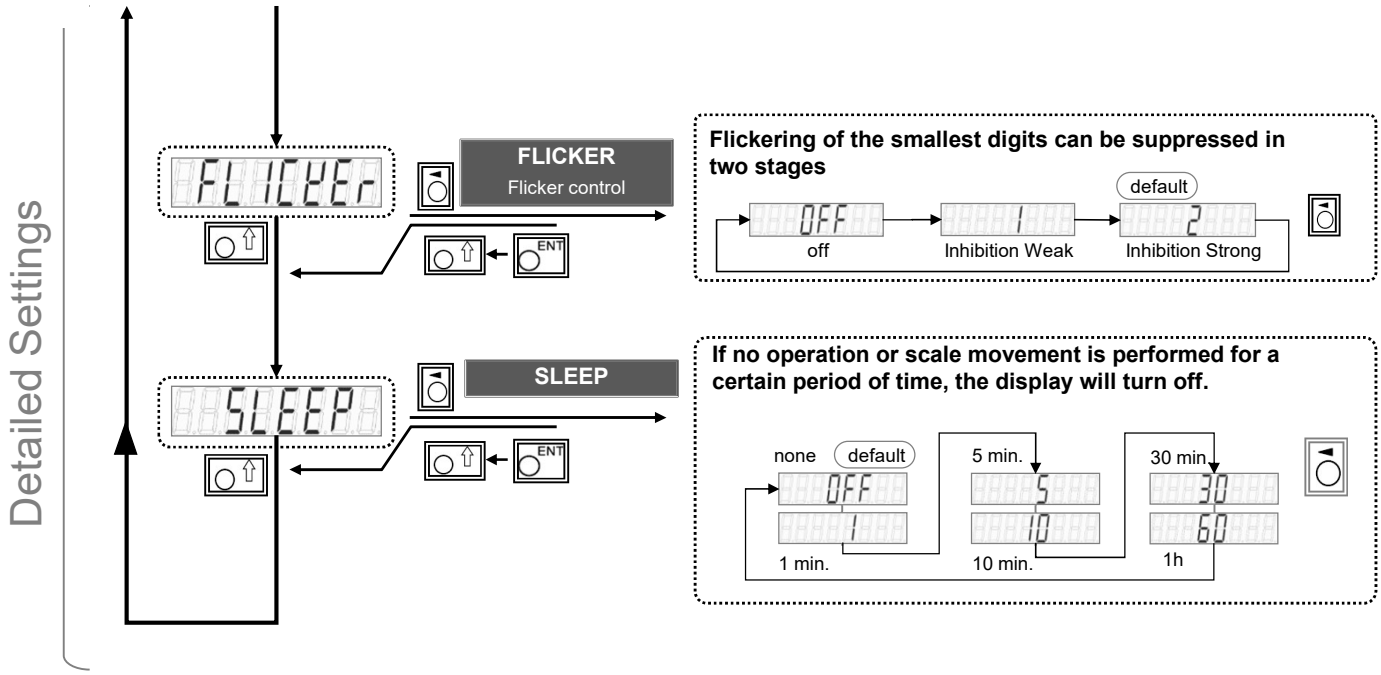

Step 5

When the Detailed Settings are complete, switch to the normal display.

Press RESET key.

This completes the initial settings..

Factory Default (All Clear)

To set the factory settings (all clear), perform the following operations.
Make preparation such as taking NOTEs in advance for necessary items.
Also, do not perform any operation other than the explanation.

CAUTION: IF YOU DO THIS, ALL SETTINGS WILL BE THE FACTORY DEFAULE SETTINGS.

Mainly used keys

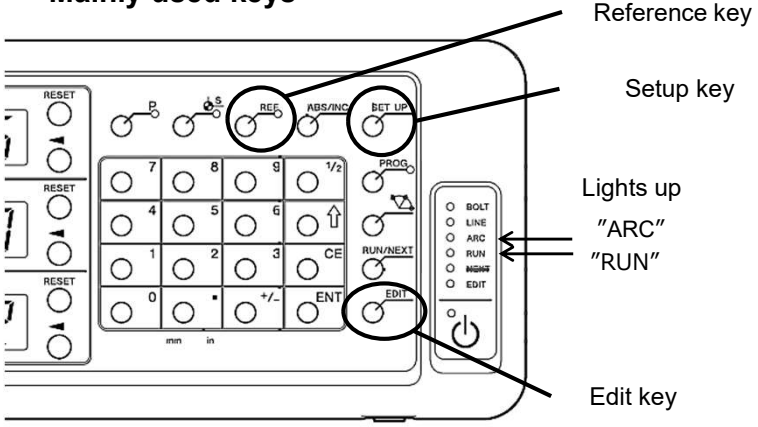

Connecting the AC Adapter

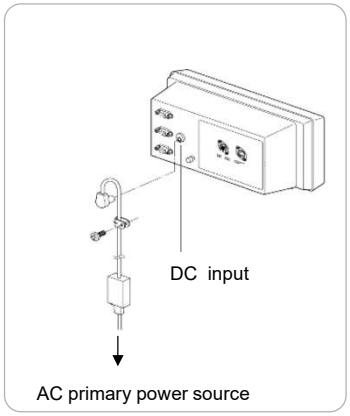

1. Hold down [REF] key and [SET UP] key at the same time to start the power supply.

Connect the AC adapter to the DC-IN input on the back of the counter and turn on the primary power supply.

⇒ The model name of the counter is displayed [LH71]

2. When you press [REF] key, [SLF 757] is displayed, followed by [757 SEL]

3. Pressing [REF] key changes the display as shown below.

START → [A757] → [A757] → [A757] → [A757] → [S7r 0E] → [ALL CLr] → [CLr 0E] → [757 SEL] → completion

4. "ARC" and "RUN" LEDs will be lit.

5. Press [EDIT] key to confirm the number of input axis.

In case of LH71-1,	[INPUT-1]	is displayed.
In case of LH71-2,	[INPUT-2]	is displayed.
In case of LH71-3,	[INPUT-3]	is displayed.

6. Turn off the primary power supply of the AC adapter.

How to check the software version:

Power ON → Display LH → [Mset] Key → Version
Press any key to return to the LH display.

Appendix 1

Front panel

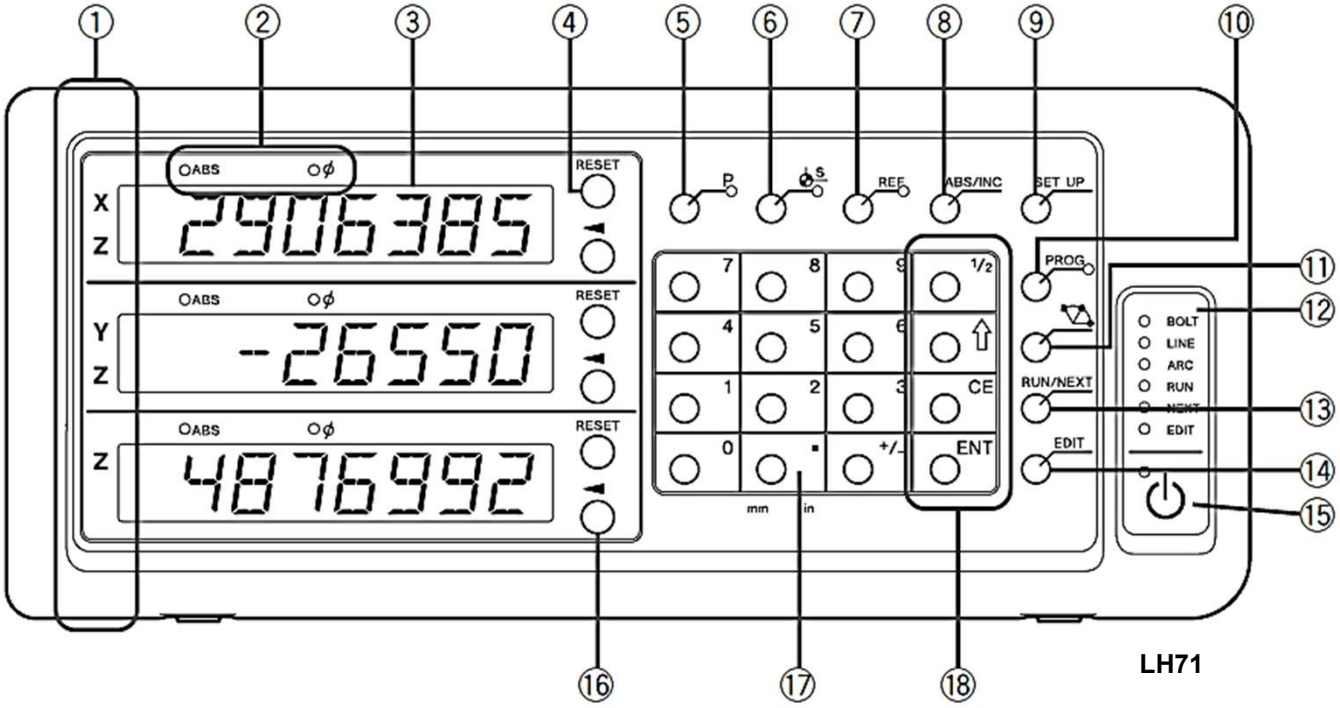

No.	Name	No.	Name	No.	Name
①	Axis label	⑦	REF key	⑬	RUN/NEXT key
②	ABS lamp, Φ lamp	⑧	ABS/INC key	⑭	EDIT key
③	Counter display	⑨	SETUP key	⑮	Standby key
④	RESET key	⑩	PROG key	⑯	Axis select key
⑤	P key	⑪	Canned cycle key	⑰	Numeric key
⑥	Datum point value setting key	⑫	Status lamp	⑱	Function key

Alarm indication

Display	Status	Display	Status
Error	Measurement unit not connected	(Blinking) LH 8	Storage data error
SPd Err	Speed over (NOTE)	rError	Error in reference point detection
F000000	Overflow	PrG Err	Program error
LH	Power failure	M07 rUN	Program error

NOTE: When using an adapter connection (SZ**), no speed override indication is shown, but rather an error message.

Appendix 2-1 Adapter connection (Length scale)

Scale/ Head	Resolution	Adapter	Counter
SR128(GB-A)	0.5μm	SZ70-1	LG20 LH70/71/71A/72 LY71/72
PL20B	10μm		
SJ700	5μm		

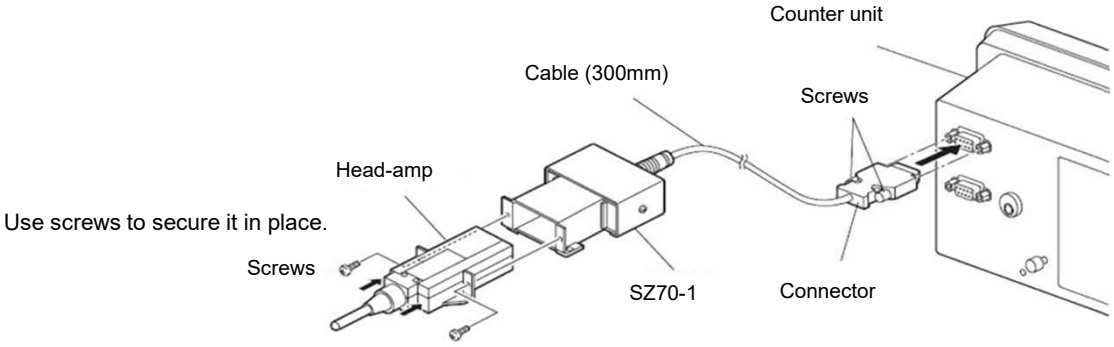

Scale/ Head	Resolution	Adapter 1	Adapter 2	Counter
SR108(GB)	0.5μm	SZ51-MS01	SZ70-1	LG20 LH70/71/71A/72 LY71/72
PL20A	10μm	SZ51-DR01		

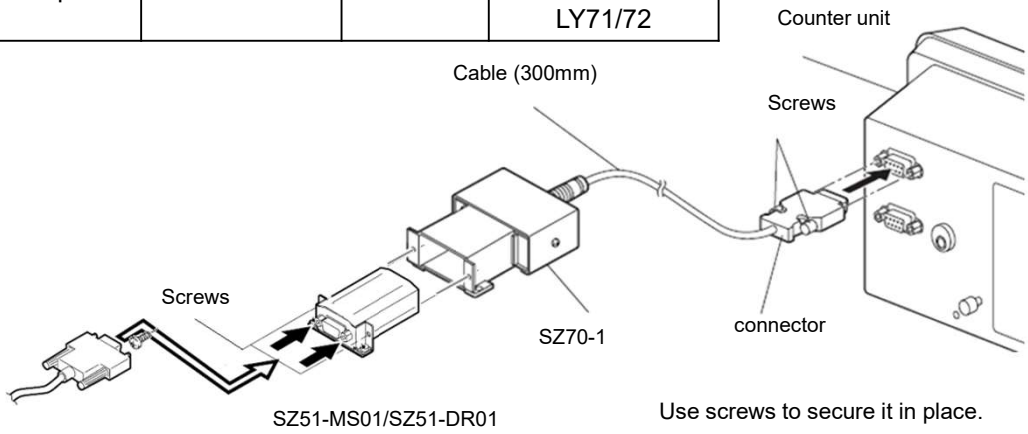

Scale	Resolution	Adapter	Counter
SR-1711(GP)、SR10A/741(GS)、SR50A(GF,GF-R)、SR30A(GM)、SR801/801R(GL)	0.5μm	SZ05-T01	LG20 LH70/71/71A/72 LY71/72

* HA13A, 15A, 23A and 25A are used as head amps

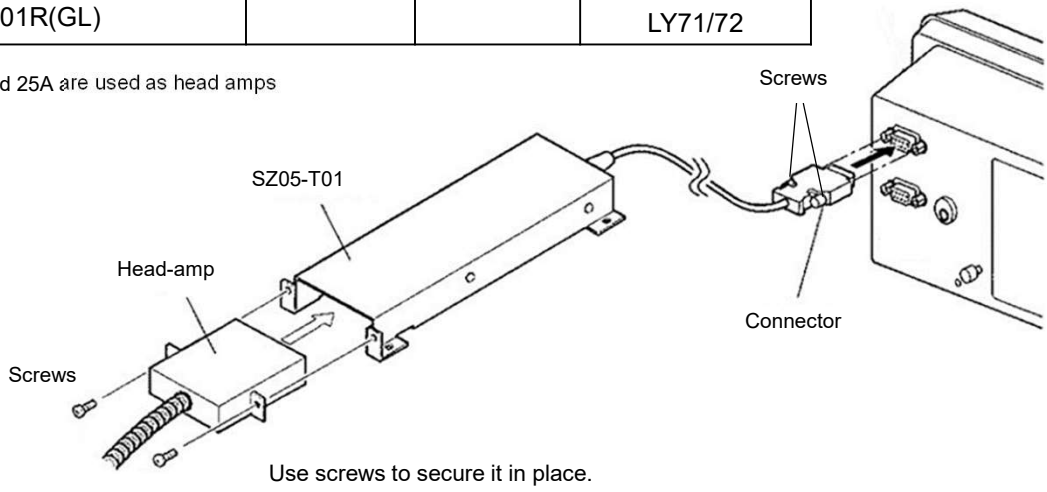

Appendix 2-2 Adapter connection (Digital gauge)

Gauge	Resolution	Connection cable	Counter
DK-**	0.1μm or 0.5μm	CE29-** **: 003/01/03/05/10 (0.3 to 10m)	LG20 LH70/71/71A/72 LY71/72

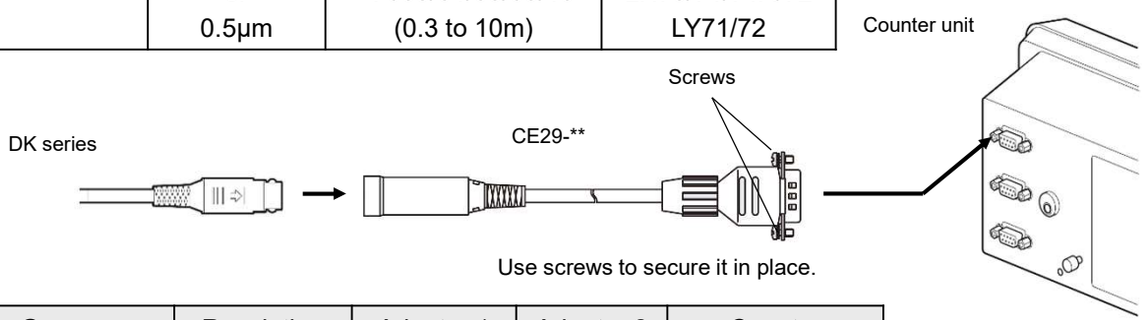

Gauge	Resolution	Adapter 1	Adapter 2	Counter
DG-B	0.5μm	DZ51	SZ70-1	LG20 LH70/71/71A/72 LY71/72
DL310B/330B	10μm			

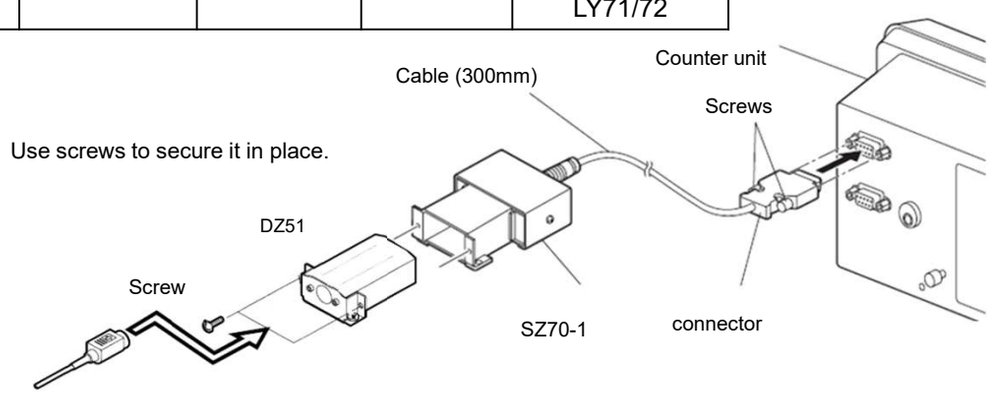

Gauge	Resolution	Adapter	Counter
DG	0.5μm	SZ05－T01	LG20 LH70/71/71A/72 LY71/72

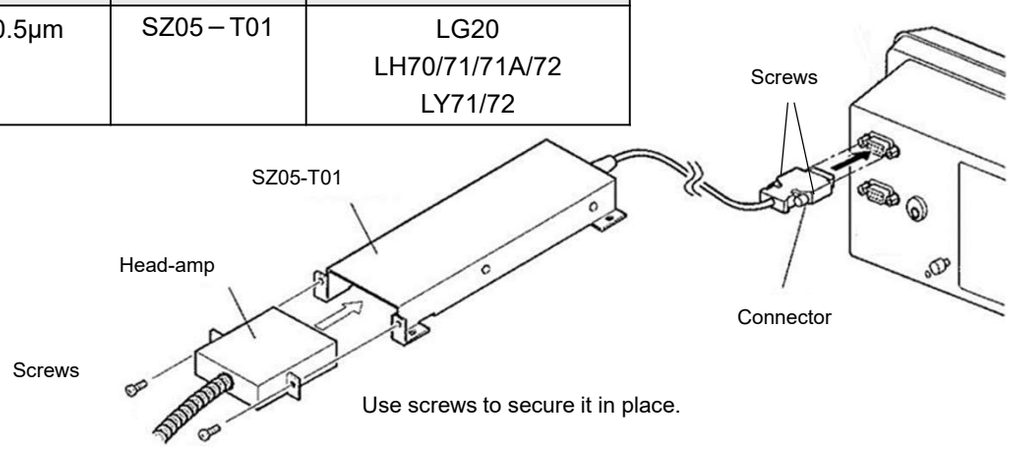

Gauge	Resolution	Adapter	Counter
DE12BR/30BR	0.1μm	SZ70-1	LG20 LH70/71/71A/72 LY71/72

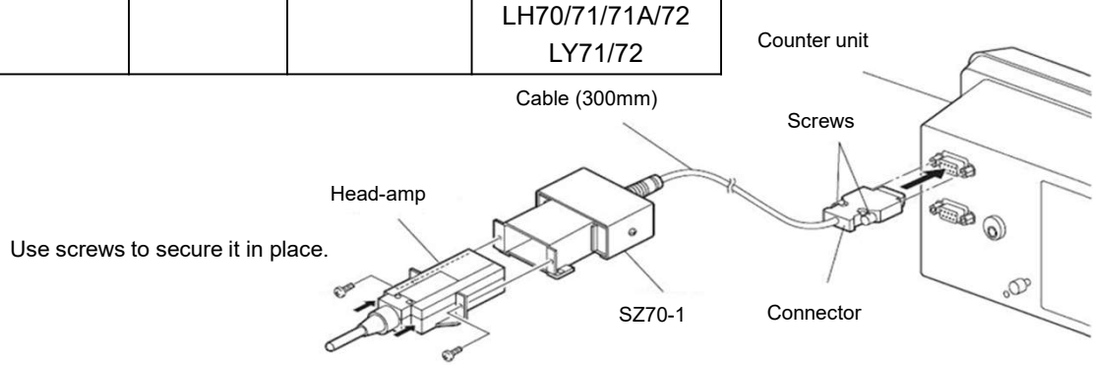

Automation and Metrology International, LLC
1-888-354-2525
auto-met.com