Automation and Metrology International, LLC

1-888-354-2525 | sales@auto-met.com

8808 Tyler Blvd, Mentor, OH 44060 | Request a quote: auto-met.com

Encoder models

647
648

Mounting instructions

LEINE LINDE

ID:1088015-01
Document ID:10880I5-04-C-01

Contact

SWEDEN / SVERIGE (Head office)
Västerportsvägen 20, SE-645 22 Strängnäs
T +46-(0)152-265 00
info@leinelinde.se

For further contact information, please visit our website at
www.leinelinde.com

Leine & Linde AB is a Swedish company dedicated to production of encoders for heavy duty applications. Some of the values offered by Leine & Linde AB are local technical support and possibility of 24 hours express delivery.

On our website **www.leinelinde.com** you can find
- data sheets and other product information
- detailed manuals and software for use with fieldbus encoders.

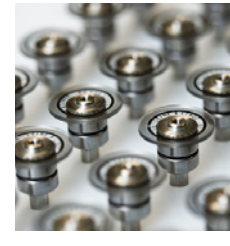

Before installation please read this manual carefully.
Failure to follow the instructions in this manual will render the ATEX/IECEx certifications **INVALID**.

The following models are fully covered by these mounting instructions:

ISA 647
ISA 648
IHA 647
IHA 648

Contents

1. General information 6
2. Encoder types 8
3. Certification according to ATEX and IECEx 10
4. Specific conditions for safe use 12
5. Risk of bodily injury 14
6. Risk of damage to the product 16
7. Part of the products 18
8. Information before mounting of encoder 20
9. Information before mounting of cable 21
10. Check points for mechanical mounting 22
11. Mounting of cable 24
12. Power supply information 26
13. Bus settings 28
14. Terminal pinning 30
15. Dimensions 32
16. Declaration of Conformity 34

1

General information

General data	
Ingress protection class [EN 60 529]	IP66 and IP67
Force (axial/radial)	50/60 [N]
Vibration [IEC 60 068-2-6]	20 g
Shock [IEC 60 068-2-27]	100 g/11 ms, 200 g/6 ms
Material	AISI 316L/EN 1.4404 stainless steel housing, flange and shaft.
Atmosphere pressure	0,8-1,1 bar

The inductive absolute encoder IXA 64XXXXXXX is intended for use on e.g. synchronous motors in a hazardous area, for measuring speed and position. The enclosure is flameproof and designed for dust ignition protection. Flange, housing, back cover and shaft consist of stainless steel. The housing material has a high resistance to corrosion and therefore suitable in demanding environments such as those common within marine and offshore applications.

The cover of the flameproof enclosure is screwed on by six hexagon socket head cap screws (M4x0,7x50) of stainless steel. These screws, and six other screws of the same type, to fasten the flange to the housing (M4x0,7x14 for clamping flange or M4x0,7x25 for synchro flange), have property class A4-70.

The enclosure (the plastic labels) shall not be subjected to highly efficient charging mechanism (stronger than manual rubbing of the surfaces) to avoid incendive propagating brush discharges.

The encoder requires no service during use and is not repairable. The encoder's lifetime is limited mainly by the bearing grease lifetime.

In case information is needed on the dimensions of the flameproof joints, the manufacturer shall be contacted.

Installation and maintenance related to explosion protection, shall be performed according to applicable national provisions. For European Union, provisions based on Directive 1999/92/EC shall be considered and for European member countries of CENELEC, national standards based on EN 60079-14 and EN 60079-17 shall be considered.

2

Encoder types

I		A	6	4						

Shafts

S = Solid shaft
H = Hollow shaft

Model

7 = Singleturn 19 bit (SSI 13 bit)
8 = Multiturn 31 bit (SSI 25 bit)

Shaft size

XX = 0-99

Flange

01 = Synchro flange
02 = Clamping flange

Electronics

Electronics	Supply voltage
10 = 3 x M20 PROFIBUS	9-30 Vdc
20 = 3 x M20 PROFINET	9-30 Vdc
30 = 2 x M20 DeviceNet	9-30 Vdc
40 = 3 x M20 CANopen	9-30 Vdc
50 = 1 x M20 SSI	9-30 Vdc
60 = 1 x M20 EnDat	3.6-14 Vdc
70 = 3 x M20 EtherNet/IP	9-30 Vdc

All of the variants within the code key are certified according to ATEX and IECEx. The encoder variants IXA 64XXXXXX are certified for ATEX equipment group II, category 2 G and D (gas and dust), code Ex db IIC T6...T4 and Ex tb IIIC T85°C...T135°C for ATEX and IECEx, and may thus be used in zone 1 (gas) or 21 (dust) with potentially explosive atmospheres.

3

Certification according to ATEX and IECEx

ATEX

EC-Type examination certificate, including supplement No.1, SP15ATEX3649X.
Condition for the certificate is specified in Tamb °C and rpm max.

Certification with temperature class	Tamb °C	Rpm max
II 2G Ex db IIC T6 II 2D Ex tb IIIC T85°C	-40°C...+60°C	500
II 2G Ex db IIC T6 II 2D Ex tb IIIC T85°C	-40°C...+50°C	1600
II 2G Ex db IIC T6 II 2D Ex tb IIIC T85°C	-40°C...+40°C	3600
II 2G Ex db IIC T5 II 2D Ex tb IIIC T100°C	-40°C...+70°C	900
II 2G Ex db IIC T5 II 2D Ex tb IIIC T100°C	-40°C...+60°C	2000
II 2G Ex db IIC T5 II 2D Ex tb IIIC T100°C	-40°C...+50°C	3600
II 2G Ex db IIC T5 II 2D Ex tb IIIC T100°C	-40°C...+40°C	5100
II 2G Ex db IIC T4 II 2D Ex tb IIIC T135°C	-40°C...+70°C	6000

The encoder IXA 64XXXXXXX conforms to the following standards:

- EN 60079-0:2012 + A11:2013 (SS-EN 60079-0 ed 4 + SS-EN 60079-0/A11 ed 1)
- EN 60079-1:2014 (SS-EN 60079-1 ed 3)
- EN 60079-31:2014 (SS-EN 60079-31 ed 2)

IECEx

Certified according to the table below as per SP 15.0001X.
Condition for the certificate is specified in Tamb °C and rpm max.

Certification with temperature class	Tamb °C	Rpm max
Ex db IIC T6 Ex tb IIIC T85°C	-40°C...+60°C	500
Ex db IIC T6 Ex tb IIIC T85°C	-40°C...+50°C	1600
Ex db IIC T6 Ex tb IIIC T85°C	-40°C...+40°C	3600
Ex db IIC T5 Ex tb IIIC T100°C	-40°C...+70°C	900
Ex db IIC T5 Ex tb IIIC T100°C	-40°C...+60°C	2000
Ex db IIC T5 Ex tb IIIC T100°C	-40°C...+50°C	3600
Ex db IIC T5 Ex tb IIIC T100°C	-40°C...+40°C	5100
Ex db IIC T4 Ex tb IIIC T135°C	-40°C...+70°C	6000

The encoder IXA 64XXXXXXX conforms to the following standards:

- IEC 60079-0:2011 (ed 6)
- IEC 60079-1:2014 (ed 7)
- IEC 60079-31:2013 (ed 2)

4

Specific conditions for safe use

The encoders are certified according to the ATEX Directive 2014/34/EU and the IECEx-system. The following special conditions for safe use shall be considered according to the certificates:

1. The encoder is delivered with or without plastic covers in the threaded holes for cable entries. Such covers shall be replaced. The encoder shall be fitted with certified Ex Equipment cable glands, certified Ex blanking elements (blind plugs) or other equipment certified cable entry devices, in accordance with applicable installation provisions.

2. To be considered (in addition to delay 5 minutes before opening of the enclosure after de-energizing), for encoders type PROFIBUS, PROFINET, DeviceNet, CANopen and EtherNet/IP:
   To avoid possible excessive charged capacitors connected between the encoder circuit and enclosure (earth) when opening the enclosure, all conductors connected to the encoder incl. protective earth shall be short-circuited outside hazardous area before opening the enclosure.

3. The enclosure (the labels) shall not be subject to highly efficient charging mechanism (stronger than manual rubbing of the surfaces), to avoid incendive propagating brush discharges.

4. In case information is needed on the dimensions of the flameproof joints, the original manufacturer (holder of this certificate) shall be contacted. According to the standard (clause 11.3 in IEC 60079-1), the property class for the twelve hexagon socket screws by which the cover and flange is fastened to the housing, shall be specified in the certificate; their property class is A4-70.

5

Risk of bodily injury

5.1)

Important before mounting begins:

5.1 Make sure the machine is at a standstill. The product is to be mounted on a rotating part that can cause bodily injury when in motion.

6

Risk of damage to the product

6.1)

6.2)

6.3)

6.4)

6.5)

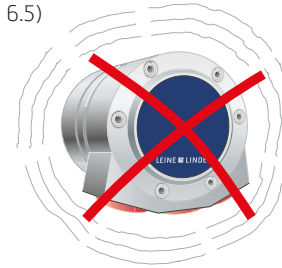

6.6)

6.7)

The product is a precision measuring instrument. It should be handled with care, by experienced personnel. The warnings in this chapter apply in the event of effects outside the limit values stated in chapter 1.

The product may be damaged

6.1 by ESD discharges if the electronics are touched
6.2 if the shaft is exposed to high mechanical forces
6.3 by moisture or chemical fluids (do not install cable pointing upwards)
6.4 if it is exposed to extreme temperatures
6.5 if it is exposed to powerful vibrations or shock
6.6 by short-circuits or an excessively high supply voltage
6.7 by impacts or knocks or other physical damage.

7

Parts of the products

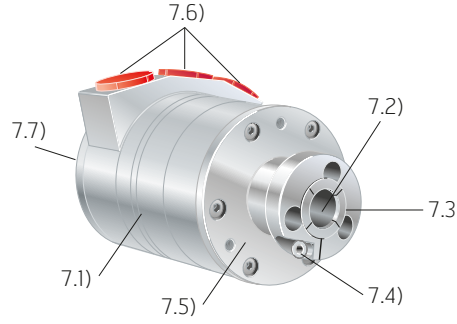

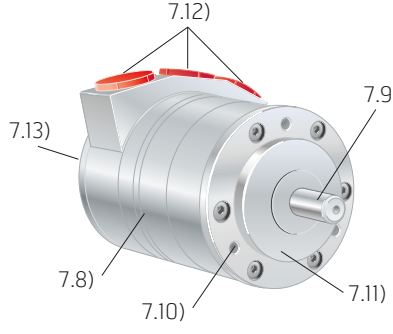

7.1 Hollow shaft encoder
7.2 Hollow shaft
7.3 Clamping ring
7.4 Fixing screw
7.5 Flange
7.6 Entries for cable glands*
7.7 Back cover

7.8 Solid shaft encoder
7.9 Solid shaft
7.10 Fixing holes
7.11 Flange
7.12 Entries for cable glands*
7.13 Back cover

*Plastic plugs only for shipping. Must be replaced with Ex d and Ex t certified Ex Equipment cable glands or Ex blind plugs.

8

Information before mounting of encoder

Only skilled/authorized persons are allowed to install the encoder. Information on hazardous areas and the manufacturer datasheets, as well as laws or guidelines applying to the use or the intended purpose are to be followed.

Mounting of encoder
To avoid high shock and vibration impacts on the encoder, mounting of the flange according to chapter 10 are to be fulfilled.

Required tools for mounting:
- Hex key T3 for protected earth, PE, internal and external
- Hex key T3 for cover
- Hex key T4 for clamping ring
- Philips screwdriver PH2 for the connecting sockets

Warning label

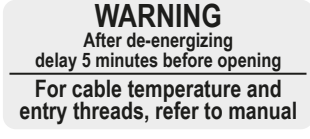

9

Information before mounting of cable

Use **only** Ex d and Ex t certified Ex Equipment cable glands, which shall have correct level of protection and temperature rating according to the table below. Non-used entries to the encoder must be closed with Ex d and Ex t certified Ex Equipment blind plugs, with correct level of protection and temperature rating according to the table below. Cable, Ex d and Ex t certified Ex Equipment cable glands and Ex blind plugs are not included in the certification of the encoder.

Use appropriate cable according to certified temperature class, pages 10-11. The selected cable shall be rated for a branching point temperature and cable entry temperature according to the table below.

All cables for internal connection including cable for protective earth (PE), shall be within the range of 0,25 mm^2 to 4 mm^2, and the PE cable area shall be not less than the area for the supply cables.

For mounting of cable glands:
M20x1,5 6g with a minimum screw thread length of 9 mm and a maximum of 16 mm (excluding any washer). Please, refer to the cable gland manufacturer's mounting instructions.

Cable and gland can be included as accessories in the original delivery. Information regarding the complete accessory range can be found at **www.leinelinde.com**.

Branching point and cable entry specification

Max Tamb °C	Max rpm	Branching point °C	Cable entry °C
40	5100	85	75
50	1600	80	70
50	3600	90	80
60	500	85	75
60	2000	95	85
70	900	95	85
70	6000	115	105

10

Check points for mechanical mounting

10.1)

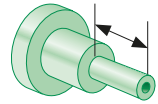

10.2)

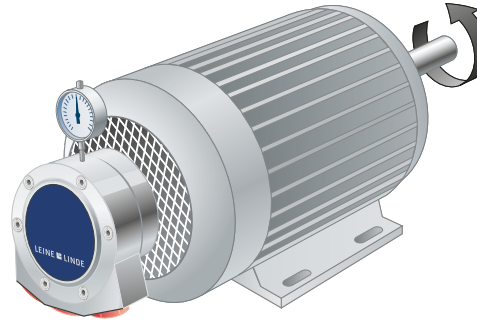

10.3)

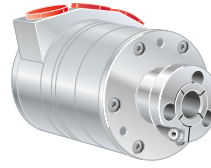

10.4)

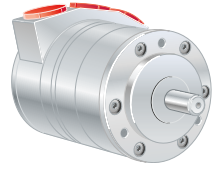

a)

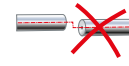

b)

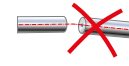

c)

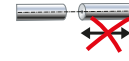

While mounting the encoder, care should be taken to ensure that no axial or radial tension is loaded into the assembly while fastening screws, as this will increase wear and shorten the life span of the encoder bearings. This could also impact the measurement accuracy of the system.

Hollow shaft

10.1 Check that the dimensions of the mating shaft match the specifications in the encoder's data sheet.

10.2 Check the encoder's radial offset while slowly rotating the complete assembly. The offset should not exceed 0.1 mm.

10.3 Check that the clamping ring is loose when installing the encoder. Tighten the clamping ring with a torque of 4 Nm before operation.

Solid shaft

10.4 Minimise the misalignment between the two mating shafts.
Always try to avoid:
a) radial misalignment
b) angle misalignment
c) axial movement

Note! If the encoder is to be rotated when mounted, Ex d and Ex t certified blind plugs must be used.

Torque bracket
It is suggested that the encoder is mounted with a torque bracket to withstand movements during operation.

Maximum allowed depth of M5 screw engagement (excluding washer): 4 mm for clamping flange and 9 mm for synchro flange.

No screws are allowed to be mounted if no torque bracket is used.

For more information regarding torque brackets, please visit **www.leinelinde.com**.

11

Mounting of cable

11.1)

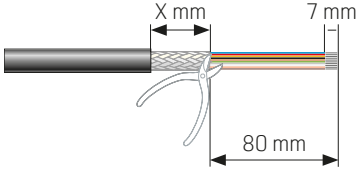

11.2)

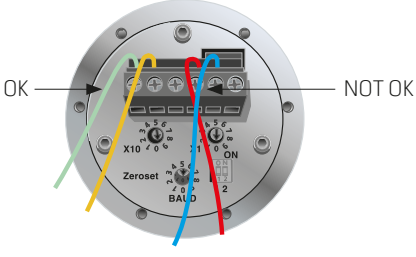

Step 1. The encoder must be disconnected from the power supply and other cables connected to the encoder before installation or replacement.
Step 2. Remove the back cover and remove the terminal strip.
Step 3. Strip the cable according to the cable gland manufacturer's instruction and strip the wires according to illustration 11.1.
Step 4. Mount the cable glands to the encoder.
Step 5. Mount the cables for protective earth, PE, with both the internal and the external earth connector screws, see drawing on page 32. Use suitable crimping tool for the external PE connector. Connect the wires according to instructions on page 30 in this manual. Make sure to insulate any unused wire. Tighten torque is 0.5 Nm.
Step 6. Connect the terminal strip to the encoder and make sure all wires are mounted correct according to illustration 11.2.
Step 7. Mount the encoder back cover with a tightening torque of 3 Nm.
Step 8. Connect the cables from the encoder to the power supply.

Dismounting of the encoder

The disconnection and voltage check has to be done **outside** the hazardous area.

Step 1. Disconnect power supply and other cables connected to the encoder. Make sure that no voltage exists between +EV, 0V and PE due to the capacitances in the encoder, by short-circuit all conductors from the encoder.
Step 2. After de-energizing delay 5 minutes before opening.
Step 3. Follow the above instructions no. 2 and no. 5.

12

Power supply information

Electrical data	Current consumption	Power supply
PROFIBUS	95 mA at 24 Vdc	9–30 Vdc
PROFINET	100 mA at 24 Vdc	9–30 Vdc
CANopen	90 mA at 24 Vdc	9–30 Vdc
DeviceNet	90 mA at 24 Vdc	9–30 Vdc
EnDat	100 mA at 5 Vdc	3.6–14 Vdc
SSI	30 mA at 24 Vdc	9–30 Vdc
EtherNet/IP	100 mA at 24 Vdc	9–30 Vdc

13

Bus settings

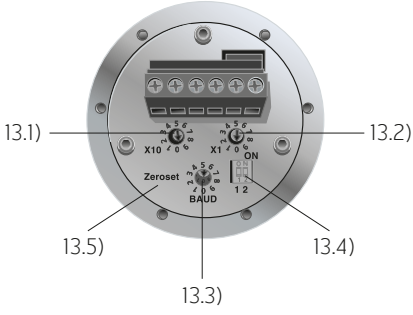

13.1 Set a unique node address for the unit, within the range 00-99.
13.2 Set a unique node address for the unit, within the range 00-99.
13.3 Set baud rate (only CANopen).
13.4 Set bus termination on or off (only CANopen and PROFIBUS).
13.5 Zeroset pushbutton (only CANopen and DeviceNet).

For information and manuals regarding the encoder interfaces (PROFIBUS, PROFINET, DeviceNet etc), please refer to separate manuals at **www.leinelinde.com**.

14

Terminal pinning

14.1)

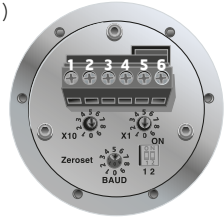

14.3)

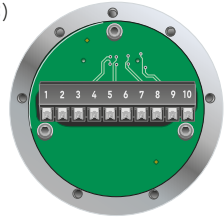

14.2)

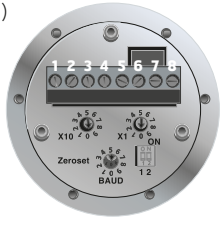

14.4)

PROFIBUS DP

Function	Terminal
+E Volt	1
0 Volt	2
B** (Bus in)	3
A* (Bus in)	4
B** (Bus out)	5
A* (Bus out)	6

*A terminals are connected
**B terminals are connected

CANopen, DeviceNet

Function	Terminal
+E Volt	1
0 Volt	2
CAN_H	3
CAN_L	4
CAN_GND	5
CAN_GND	6
CAN_L	7
CAN_H	8

PROFINET, EtherNet/IP

Function	Pin
+E Volt	1
0 Volt	2
TX+_1	3
TX-_1	4
RX+_1	5
RX-_1	6
TX+_2	7
TX-_2	8
RX+_2	9
RX-_2	10

SSI, EnDat 2.2

Function	Terminal, 6 screws
A	1
A/	2
B	3
B/	4
Not used	5
Not used	6

SSI, EnDat 2.2

Function	Terminal, 8 screws
0 Volt	1
0 Volt sense	2
+E Volt	3
+E Volt sense	4
Data	5
Data inv.	6
Clock	7
Clock inv.	8

The terminal has either 6 or 8 screw contacts depending on the encoder interface.

14.1 Terminal with 6 screws:
PROFIBUS DP

14.2 Terminal with 8 screws:
CANopen
DeviceNet
SSI*
EnDat*

14.3 Terminal with 10 screws:
PROFINET
EtherNet/IP

14.4 Pinning configuration

The interfaces are available with cable gland entry. The configuration file for each interface is to be downloaded from www.leinelinde.com/Products/Downloads.

* SSI and EnDat 2.2 have an additional screw terminal of 6 screw contacts for the incremental signal output 1 Vpp.

Ex d and Ex t certified blind plug **MUST** be used in entries where no cable gland is used.

15

Dimensions

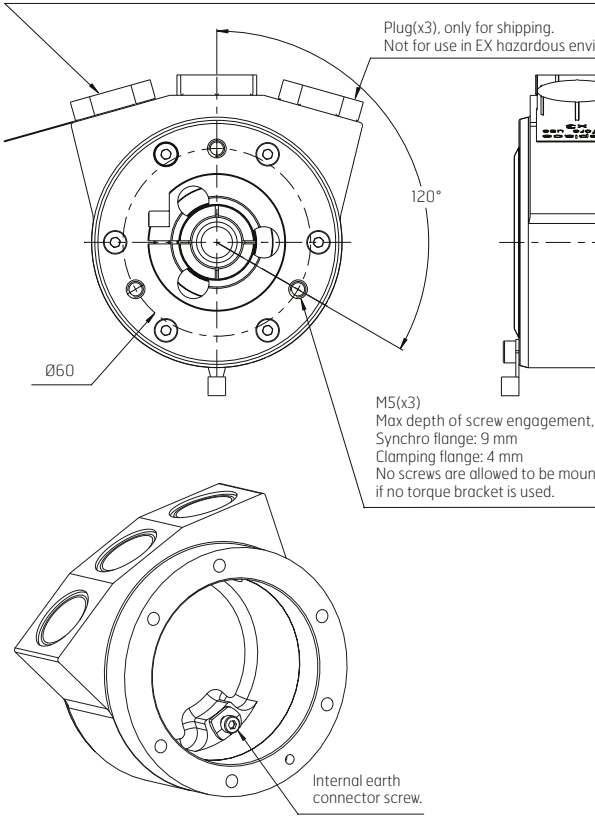

*Please refer to page 21 for more detailed information.

9-16 mm*),

ronments.

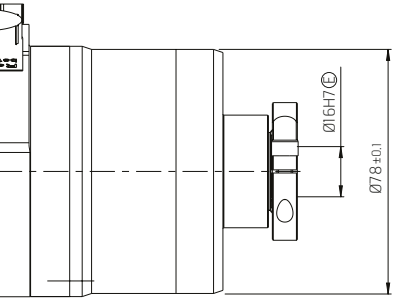

excl. washer

ted

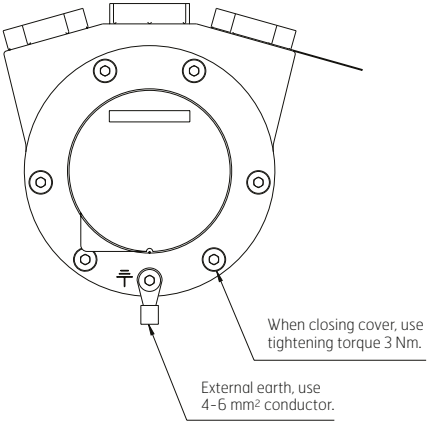

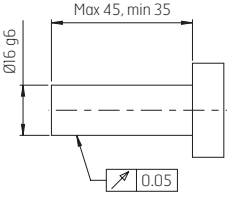

Recommended mating shaft.

16

Declaration of Conformity

LEINE & LINDE

EU - Declaration of Conformity

Leine & Linde AB
Västerportsvägen 20
SE-645 42 Strängnäs, SWEDEN
T. +46-(0)152-265 00, info@leinelinde.se, www.leinelinde.com

IXA 64X series encoders for explosive environments

The above mentioned products are in conformity with the provision of the following directives of the European Commission:
EMC Directive 2014/30/EU, ATEX Directive 2014/34/EU and RoHS 2 Directive 2011/65/EU with amendment 2015/863/EU.

The equipment complies with the directives by meeting the following harmonized standards:

EN 61000-6-2:2005 Generic immunity standard: Industrial environment

EN 61000-6-4:2007/A1:2011 Generic emission standard: Industrial environment

EN 60079-1:2014 Equipment protection by flameproof enclosure 'd'

EN 60079-31:2014 Equipment dust ignition protection by enclosure 't'

Other technical specifications:
EN 60079-0:2012/A11:2013 – This standard (used for certification) has been compared with **EN IEC 60079-0:2018 + AC:2020-02** (currently harmonized) and no major/substantial technical changes have occurred which are applicable to this equipment.

EN IEC 63000:2018 Technical documentation for the assessment of electrical and electronic products with respect to the restriction of hazardous substances

EC-Type examination certificate, including supplement No.1, **SP15ATEX3649X**

Strängnäs, 2024-01-09

Lars-Albert Ahlström
R&D Manager

This declaration certifies that this product complies with the above directives. It is not, however, a guarantee of quality. Please comply with the safety instruction and instructions in the accompanying product documentation.
TIS Doc. No: 1427450_02_A_01

The declaration document can be downloaded from **www.leinelinde.com**.

Products from Leine & Linde are usually components in larger systems. These applications require the system as a whole to be tested, and do not depend on the component specifications only.

Instructions in these mounting instructions apply to products from Leine & Linde, not for the system as a whole. If products are used in a way for which they are not intended, this is at the user's own risk.

OCTOBER 2025

Automation and Metrology International, LLC

1-888-354-2525

auto-met.com