For ROC/ROQ/ROD 400 and RIC/RIQ 400 series

With Clamping Flange

Rotary encoders for separate shaft coupling

ROC/ROQ/ROD 4xx
RIC/RIQ 4xx

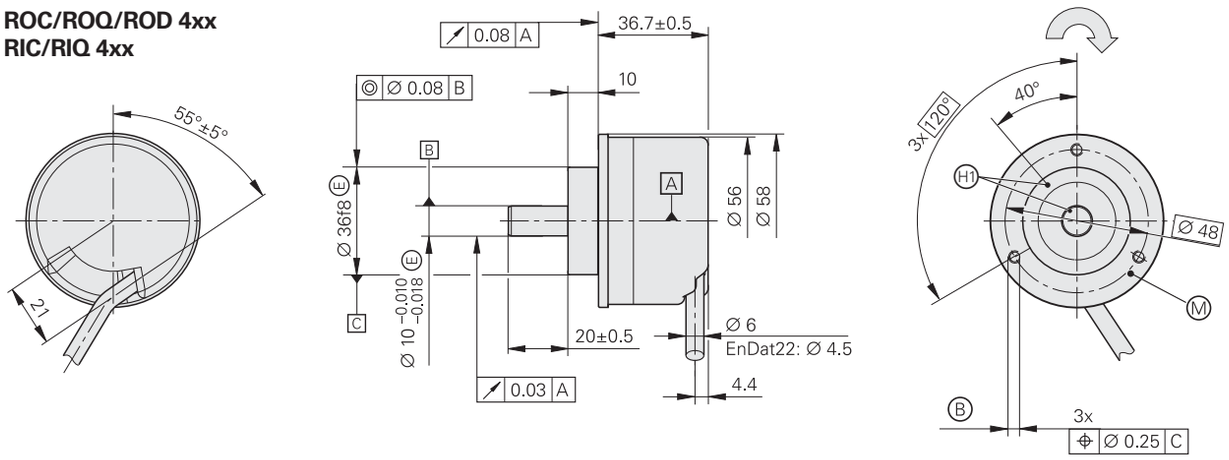

Connector coding
A = axial, **R** = radial

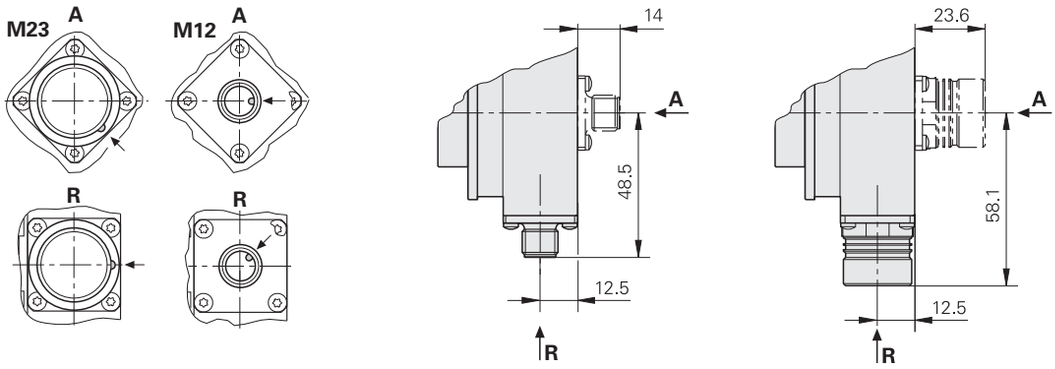

ROC 413/ROQ 425 with PROFIBUS DP

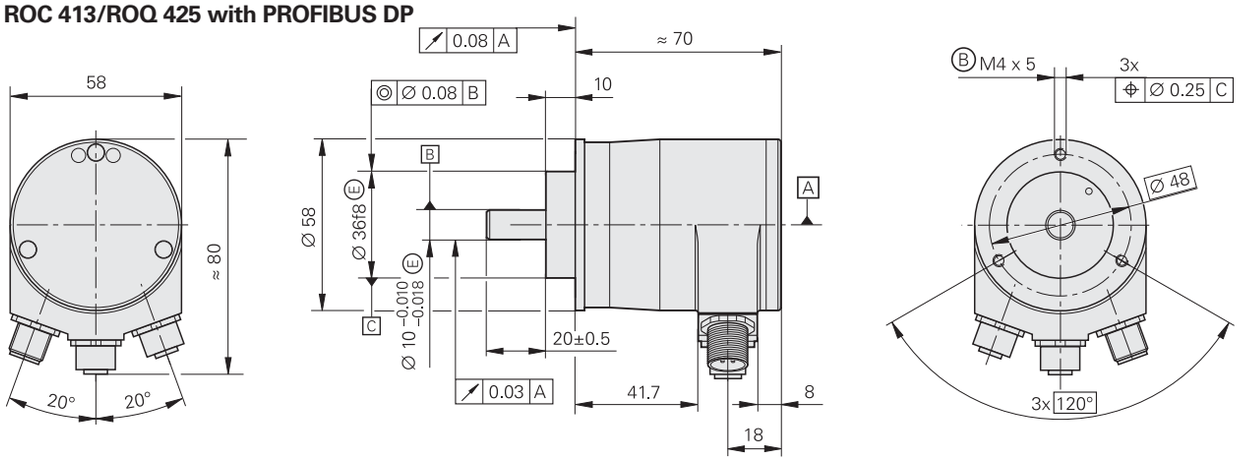

Dimensions in mm

Tolerancing ISO 8015
ISO 2768 - m H
< 6 mm: ±0.2 mm

Cable radial, also usable axially
A = Bearing
B = Threaded mounting hole M3x5 on ROD; M4x5 on ROC/ROQ/RIC/RIQ
M = Measuring point for operating temperature
H1 = ROD: Reference mark position on shaft and flange ± 15°
Direction of shaft rotation for output signals as per the interface description

Automation and Metrology International, LLC
8808 Tyler Blvd, Mentor, OH 44060
1-888-354-2525 | sales@auto-met.com
Request a quote: auto-met.com

	Absolute **Singleturn**				
	ROC 425	**ROC 413**			**RIC 418**
Absolute position values*	**EnDat 2.2**	**EnDat 2.2**	**SSI**	**PROFIBUS DP**	**EnDat 2.1**
Ordering designation	EnDat 22	EnDat 01	39r1		EnDat 01
Positions per revolution	33 554 432 (25 bits)	8 192 (13 bits)		8 192 (13 bits)[3]	262 144 (18 bits)
Revolutions	–				
Code	Pure binary		Gray	Pure binary	
Elec. permissible speed Deviations[1]	≤ 12 000 min^{-1} for continuous position value	*512 lines:* ≤ 5 000/12 000 min^{-1} ± 1 LSB/± 100 LSB *2 048 lines:* ≤ 1 500/12 000 min^{-1} ± 1 LSB/± 50 LSB	12 000 min^{-1} ± 12 LSB	≤ 5 000/12 000 min^{-1} ± 1 LSB/± 100 LSB	≤ 4 000/15 000 min^{-1} ± 400 LSB/± 800 LSB
Calculation time t_{cal}	≤ 5 µs		≤ 0.5 µs[6]	–	≤ 8 µs
Incremental signals	None	∿ 1 V_{PP}[2]		None	∿ 1 V_{PP}
Line counts*	–	**512** 2 048	**512**	–	**16**
Cutoff frequency –3 dB	–	*512 lines:* ≥ 130 kHz; *2 048 lines:* ≥ 400 kHz		–	≥ 6 kHz
System accuracy	± 20"	± 60"			± 480"
Power supply*	**3.6 to 14 V**	**3.6 to 14 V**	5 V ± 5 % or **10 to 30 V**	**9 to 36 V**	**5 V** ± 5 %
Current consumption without load	≤ 110 mA[8]	≤ 110 mA[8]	≤ 100 mA or ≤ 45 mA	≤ 150 mA at 24 V	≤ 160 mA
Electrical connection*	• **Flange socket** M12, radial • Cable 1 m, with M12 coupling	• **Flange socket** M23, axial or radial • Cable 1 m/5 m, with or without M23 coupling		**Three flange sockets**, M12 radial	• **Flange socket** M23, radial • Cable 1 m, with M23 coupling
Shaft	Solid shaft D = 10 mm				
Mech. permissible speed n	≤ 12 000 min^{-1}				
Starting torque	≤ 0.01 Nm (at 20 °C)				
Moment of inertia of rotor	≤ 2.3 · 10^{-6} kgm^2				
Shaft load[5]	Axial 10 N/radial 20 N at shaft end				
Vibration 55 to 2 000 Hz **Shock** 6 ms/2 ms	≤ 300 m/s^2; *PROFIBUS-DP:* ≤ 100 m/s^2 (EN 60 068-2-6) ≤ 1 000 m/s^2/≤ 2 000 m/s^2 (EN 60 068-2-27)				
Max. operating temp.[7]	100 °C			70 °C	100 °C
Min. operating temp.	*Flange socket or fixed cable:* –40 °C *For frequent flexing:* –10 °C			–40 °C	*Flange socket or fixed cable:* –40 °C *For frequent flexing:* –10 °C
Protection EN 60 529	IP 67 at housing; IP 64 at shaft end[4]				
Weight	Approx. 0.35 kg				

Bold: These preferred versions are available on short notice
* Please select when ordering
1) Velocity-dependent deviations between the absolute value and incremental signal
2) Restricted tolerances: Signal amplitude 0.8 to 1.2 V_{PP}
3) These functions are programmable

	Multiturn				
	ROQ 437	**ROQ 425**			**RIQ 430**
	EnDat 2.2	**EnDat 2.2**	**SSI**	**PROFIBUS DP**	**EnDat 2.1**
	EnDat 22	EnDat 01	41r1		EnDat 01
	33 554 432 (25 bits)	8 192 (13 bits)	8 192 (13 bits)	8 192 (13 bits)[3]	262 144 (18 bits)
	4 096			4 096[3]	4 096
	Pure binary		Gray	Pure binary	
	≤ 12 000 min^{-1} for continuous position value	*512 lines:* ≤ 5 000/10 000 min^{-1} ± 1 LSB/± 100 LSB *2 048 lines:* ≤ 1 500/10 000 min^{-1} ± 1 LSB/± 50 LSB	10 000 min^{-1} ± 12 LSB	≤ 5 000/10 000 min^{-1} ± 1 LSB/± 100 LSB	≤ 4 000/15 000 min^{-1} ± 400 LSB/± 800 LSB
	≤ 5 µs		≤ 0.5 µs[6]	–	≤ 8 µs
	None	∿ 1 V_{PP}[2]		None	∿ 1 V_{PP}
	–	**512** 2 048	**512**	–	**16**
	–	*512 lines:* ≥ 130 kHz; *2 048 lines:* ≥ 400 kHz		–	≥ 6 kHz
	± 20"	± 60"			± 480"
	3.6 to 14 V ≤ 140 mA[8]	**3.6 to 14 V** ≤ 140 mA[8]	5 V ± 5 % or **10 to 30 V** ≤ 130 mA or ≤ 55 mA	**9 to 36 V** ≤ 150 mA at 24 V	**5 V** ± 5 % ≤ 190 mA
	• **Flange socket** M12, radial • Cable 1 m, with M12 coupling	• **Flange socket** M23, axial or radial • Cable 1 m/5 m, with or without M23 coupling		**Three flange sockets**, M12 radial	• **Flange socket** M23, radial • Cable 1 m, with M23 coupling
	100 °C			70 °C	100 °C
	Flange socket or fixed cable: –40 °C *For frequent flexing:* –10 °C			–40 °C	*Flange socket or fixed cable:* –40 °C *For frequent flexing:* –10 °C

4) IP 66 upon request
5) Also see *Mechanical Design and Installation*
6) The position value is updated internally every 5 µs
7) For the correlation between the operating temperature and shaft speed or power supply, see *General Mechanical Information*
8) Depends on the power supply; see *General Electrical Information*

Automation and Metrology International, LLC
1-888-354-2525
auto-met.com